0011
Book F

SUPPLEMENT TO STANDARD OPERATION AND MAINTENANCE MANUAL

SACRAMENTO RIVER FLOOD CONTROL PROJECT

UNIT NO. 119
PUTAH CREEK CHANNEL AND LEVEES
AND
WEST LEVEE OF YOLO BY-PASS
FROM
YOLO CAUSEWAY DOWNSTREAM 3 MILES

SACRAMENTO DISTRICT

CORPS OF ENGINEERS

U. S. ARMY

SACRAMENTO, CALIFORNIA

FILE COPY

STATE OF CALIFORNIA -- THE RESOURCES AGENCY

GRAY DAVIS, *Governor*

THE RECLAMATION BOARD
1416 NINTH STREET, ROOM 1601
SACRAMENTO, CA 95814
(916) 653-5434 FAX: (916) 653-5805
Permits: (916) 653-5726 FAX: (916) 653-5805

AUG 0 3 2001

addressed in 1992

recent Rec Bus. does.
more flow than 40,000?

Mr. T. M. Hardesty
General Manager
Reclamation District No. 2068
7178 Yolando Road
Dixon, California 95620-9621

Dear Mr. Hardesty:

On April 27, 2001, Reclamation Board staff met with you to discuss your concerns about the restoration project (revegetation of native flora) occurring along the south fork of Putah Creek downstream of Mace Boulevard in the southern part of the City of Davis. Your primary concern was the impact on the south levee of the Creek's floodway north of your district. We agree that any adverse impact that the project would have on present conditions could increase the risk of flooding to your district.

Discussions during that meeting indicated that you had six specific questions and requests about the project and you asked us to meet with the U.S. Army Corps of Engineers to discuss them. These requests were:

1. The South Fork Putah Creek levees were originally designed to carry 62,000 cubic feet per second as designated in the Operation and Maintenance Manual for the Sacramento River Flood Control Project. After completion of Monticello Dam, the design flow was changed during the 1970s to 40,000 cfs in the Manual. You requested an explanation of why this was done and whether or not Congress passed a resolution permitting this change.

2. The hydraulic analysis for the present restoration project indicated that the water surface elevation for the 40,000-cfs flow would increase by approximately 4 inches. You noted that the project did not include mitigation measures, such as raising the levees to compensate for this rise, and requested an explanation of why mitigation measures were not included.

3. You asked if the Corps would meet with the district to discuss the revegetation project and answer questions.

4. You had not received a copy of the Corps' decision document, Project Modification Report, for the project and asked if the Corps could provide a copy.

5. You also requested a copy of the restoration plan for revegetation of the project site.

6. In 1992, the U.S. Fish and Wildlife Service released a Final Hydraulic, Hydrologic, Vegetation and Fisheries Analysis for its Putah Creek Resource Management Plan for this project. Numerous comments were submitted which raised several issues that needed further study before the project could be authorized. You were not aware of any studies that had been made in response to those comments and you requested an explanation of changes that have negated those concerns and allowed the project to proceed.

We have discussed your concerns with Mr. Brad Hubbard, Project Engineer for the South Fork Putah Creek Restoration Project. His research of the Corps' archives has uncovered the following information to your six questions:

1. After the completion of Monticello Dam, The Reclamation Board requested that the Corps reassess the project design flow of 62,000 cfs in view of the storage capacity of the new reservoir created by the dam. The Corps developed peak inflow to the reservoir, based on a "standard project flood" analysis, was computed to be 130,000 cfs. The results of the reassessment indicated that the spf peak outflow would be reduced to 40,000 cfs (see Attachment 1). The Corps and the Board agreed during the 1970s to change the flow and the corresponding reduction in maintenance in the O&M Manual. As this was considered a reoperation of the project, the change did not require congressional action. The Corps has been unable to locate a copy of the letter from the Board agreeing to change the flow. However, Mr. Hubbard has located three memoranda and a letter to the Board that discuss the change and a proposed change to the O&M Manual (Attachments 2-5).

2. The decision document for this project is Project Modification Report, Putah Creek South Fork Preserve, California, Section 1135 Restoration, dated July 1996 and revised April 1997. Hydraulic studies in the document indicate that, although there has been subsidence along South Fork Putah Creek, the levee would still have sufficient height to pass the 40,000-cfs WSEL, including the additional rise in elevation from the project without encroaching into the levee's freeboard. Therefore, mitigation was not considered. Note that Attachment 1 supports this conclusion although the Corps has been unable to locate a copy of the letter from the Board accepting the conclusion.

3. Mr. Hubbard will be pleased to meet with your district to discuss the project and answer questions. He suggests that a meeting not be held until he has obtained and reviewed the information that you requested. Board staff have requested that they also be present at the meeting.

4. The Corps has furnished two copies of the decision document and we have forwarded a copy to you, along with a copy of the Project Cooperation Agreement between the City of Davis and the Corps.

5. Along with the decision document, we have sent you a copy of the revegetation plan entitled South Fork Putah Creek Restoration and Maintenance Submittal Plan dated November 15, 1999, prepared by Bitterroot Restoration, Inc.

6. Mr. Hubbard and Corps staff are still reviewing the archives for responses concerning the comments about the 1992 USFWS Plan.

If you have any questions, please contact me at (916) 653-5434, or your staff may contact Debbie Carlisle, Chief of the Department of Water Resources' System Integrity Section of the Division of Flood Management, at (916) 574-0364.

Sincerely,

ORIGINAL SIGNED BY

Peter D. Rabbon
General Manager

Attachments

cc: Mr. Brad Hubbard, Project Engineer
U.S. Army Corps of Engineers
1325 J Street
Sacramento, California 95814-2922

SEE MAP FILES "PUTAH CREEK" FOR
DRAWINGS - 8 Sheets
dated March 1974 -
COVERING MODIFIED
CLEARING REQUIREMENTS

R.Q. 4/18/75

CORPS OF ENGINEERS
U. S. ARMY

SUPPLEMENT TO STANDARD OPERATION AND MAINTENANCE MANUAL SACRAMENTO RIVER FLOOD CONTROL PROJECT

UNIT NO. 119

PUTAH CREEK CHANNEL AND LEVEES AND WEST LEVEE YOLO BYPASS FROM YOLO CAUSEWAY DOWNSTREAM 3 MILES

Prepared in the Sacramento District
Corps of Engineers, U. S. Army
Sacramento, California, December 1952

SUPPLEMENT TO STANDARD
OPERATION AND MAINTENANCE MANUAL
SACRAMENTO RIVER FLOOD CONTROL PROJECT

UNIT NO. 119

PUTAH CREEK CHANNEL AND LEVEES
AND
WEST LEVEE OF YOLO BY-PASS
FROM
YOLO CAUSEWAY DOWNSTREAM 3 MILES

LOCATION	ADDITION OR REVISION	DATE
Sections I and II	Revised Highway no. 40 designation to Interstate 80	Mar 1975
2-01 c.	Added note on semi-controlled vegetation	Mar 1975
Exhibit F	Added copy of letter indorsing revision dated 27 Feb 1975	Mar 1975
Exhibit I	Added typical sections of semi-controlled growth.	Mar 1975
Exhibit J	Added aerial mosaics (detached)	Mar 1975
Exhibit F	Add copy of letter of transfer dated 19 Nov 1946	21 Dec 2010
Exhibit F	Add copy of letter of transfer dated 31 Oct 1949	21 Dec 2010
Exhibit F	Add copy of letter of transfer dated 4 Dec 1951	21 Dec 2010
Exhibit F	Add copy of letter of transfer dated 8 Dec 1951	21 Dec 2010
Exhibit F	Add copy of letter of acceptance dated 18 Dec 1951	21 Dec 2010

SUPPLEMENT TO STANDARD
OPERATION AND MAINTENANCE MANUAL
SACRAMENTO RIVER FLOOD CONTROL PROJECT
UNIT NO. 119

TABLE OF CONTENTS

Paragraph	Subject	Page
	SECTION I - INTRODUCTION	
1-01.	Location	1
1-02.	Protection Provided	1
1-03.	Project Works	2
1-04.	Construction Data	2
1-05.	Contractor	2
1-06.	Flood Flows	3
1-07.	Assurances Provided by Local Interests	3
1-08.	Superintendent	3
	SECTION II - FEATURES OF THE PROJECT SUBJECT TO FLOOD CONTROL REGULATIONS	
2-01.	Channels	4
2-02.	Levees	8
2-03.	Drainage and Irrigation Structures	12
2-04.	Miscellaneous Facilities	16
	SECTION III - SUGGESTED METHODS OF COMBATING FLOOD CONDITIONS	
3-01.	Repair of Damage	17
3-02.	Applicable Methods of Combating Floods	17

EXHIBITS

A Flood Control Regulations - - - - - - - - - - - - Unattached (Contained in Standard Manual)

A-1 Location Map - - - - - - - - - - - - - - - - - - - 1 sheet

B "As Constructed" Drawings - - - - - - - - - - - - Detached

C Plates of Suggested Flood Fighting Methods - - Unattached (Contained in Standard Manual)

D Check List No. 1 - Levee Inspection Report - - Unattached (Contained in Standard Manual)

SUPPLEMENT TO STANDARD
OPERATION AND MAINTENANCE MANUAL
SACRAMENTO RIVER FLOOD CONTROL PROJECT
UNIT NO. 119

TABLE OF CONTENTS

Paragraph	Subject	Page
	SECTION I - INTRODUCTION	
1-01.	Location	1
1-02.	Protection Provided	1
1-03.	Project Works	2
1-04.	Construction Data	2
1-05.	Contractor	2
1-06.	Flood Flows	3
1-07.	Assurances Provided by Local Interests	3
1-08.	Superintendent	3
	SECTION II - FEATURES OF THE PROJECT SUBJECT TO FLOOD CONTROL REGULATIONS	
2-01.	Channels	4
2-02.	Levees	8
2-03.	Drainage and Irrigation Structures	12
2-04.	Miscellaneous Facilities	16
	SECTION III - SUGGESTED METHODS OF COMBATING FLOOD CONDITIONS	
3-01.	Repair of Damage	17
3-02.	Applicable Methods of Combating Floods	17

EXHIBITS

A Flood Control Regulations - - - - - - - - - - - - Unattached (Contained in Standard Manual)

A-1 Location Map - - - - - - - - - - - - - - - - - - - 1 sheet

B "As Constructed" Drawings - - - - - - - - - - - - Detached

C Plates of Suggested Flood Fighting Methods - - Unattached (Contained in Standard Manual)

D Check List No. 1 - Levee Inspection Report - - Unattached (Contained in Standard Manual)

EXHIBITS (Cont'd)

E Check Lists - Levees, Channels and Structures - - - - - Sheets 1 thru 9

F Letter of Acceptance by State Reclamation Board - - - - 1 Sheet

G Semi-Annual Report Form - - - - - - - - - - - - - - - - - Sheets 1 and 2

H Putah Creek Rating Curve - - - - - - - - - - - - - - - - - 1 Sheet

*I Photos (1973) and Sections Indicating Semi-Controlled Growth - Sheets 1 thru 7

*J Aerial Mosaics (Detached) - - - - - - - - - - - - - - - - Sheets 1 thru 8

* (Added March 1975)

SUPPLEMENT TO STANDARD

OPERATION AND MAINTENANCE

MANUAL

SACRAMENTO RIVER FLOOD CONTROL PROJECT

UNIT NO. 119

PUTAH CREEK CHANNEL AND LEVEES

AND

WEST LEVEE YOLO BYPASS

FROM

YOLO CAUSEWAY DOWNSTREAM 3 MILES

DECEMBER 1952

Nov 90

SECTION I

INTRODUCTION

1-01. Location. The improvement covered by this manual is that part of the Sacramento River Flood Control Project which includes the channel and levees of Putah Creek from the highway bridge at Winters, California, downstream to its mouth in the Yolo Bypass and the west levee of the Yolo Bypass from the Yolo Causeway southerly to Putah Creek. Putah Creek is one of the tributaries of the Yolo Bypass. The portion of the stream covered by this manual forms the boundary line between Yolo and Solano Counties and is in the general vicinity of the cities of Winters and Davis. The location of the completed unit of the Sacramento River Flood Control Project covered by this manual is shown on exhibit A-1 herewith.

1-02. Protection Provided. The project works are designed to protect adjacent agricultural lands from a flood flow of 40,000 cubic-feet per * second in Putah Creek with the Yolo Bypass at flood stage. The west levee of the Yolo Bypass is designed to protect adjacent agricultural land from a flood flow of 480,000 cubic-feet per second in the Yolo Bypass within this unit. In Putah Creek the grade of the adopted flood plane varies from elevation 62.5 at a point 0.81 mile upstream from the bridge at Interstate 80 to elevation 27.10 at the Yolo Bypass. The levee grade * provides a minimum freeboard of 3 feet above the flood plane profile from *Putah Creek a point 0.81 mile upstream from Interstate 80 (beginning of embankment) downstream to the Liberty Island Road. From the Liberty Island Road to the Yolo Bypass the freeboard increases uniformly from 3 to 6 feet. In the Yolo Bypass within this unit, the adopted flood plane profile varies

*(Revised March 1975)

from elevation 28.80 at the Yolo Causeway to elevation 27.10 at the mouth of Putah Creek. The levee grade provides for a freeboard of 6 feet above the flood plane profile.

1.03. Project Works. The project works covered by this manual was completed in three sections and includes the following:

a. Section I. Clearing of the Putah Creek Channel from the highway bridge at Winters to a point one mile upstream from the bridge at Interstate 80. *

b. Section II. Clearing and improvement by excavation of the Putah Creek channel from a point 1 mile upstream from Interstate 80 downstream to the Yolo Bypass and the construction of levees to adopted grade and section on both banks of Putah Creek. *

c. Section III. Construction of the west levee of the Yolo Bypass from the Yolo Causeway southerly to the north levee of Putah Creek.

1-04. Construction Data. Unit No. 119 of the flood control works described in this manual forms an integral part of the Sacramento River Flood Control Project. The construction to bring this unit to project standards was completed in sections under the contracts described as follows:

a. Section I. Channel clearing work extending from the highway bridge at Winters to a point approximately 1 mile upstream from the bridge at Interstate 80, started on 17 April 1950, and completed on 12 October 1950. *

b. Section II. Channel improvement by excavation and levee construction along both banks of Putah Creek extending from a point approximately 1 mile upstream from the bridge at Interstate 80 to the Yolo Bypass, started on 2 September 1948, and completed on 10 November 1949. *

c. Section III. Levee construction along the westerly edge of the Yolo Bypass, started on 16 July 1946, and completed 28 October 1946.

Responsibility for operating and maintaining the completed works herein described was officially accepted by the Reclamation Board of the State of California on 20 April 1951, as shown on the attached letter of acceptance, exhibit F. The scour on the William Hamel property mentioned in the letter of acceptance was subsequently remedied by the Sacramento District to the satisfaction of the State Reclamation Board.

1-05. Contractor. The prime work was performed under the following contracts, record copies of which are on file with the Corps of Engineers, U.S. Army, Sacramento District, Sacramento, California.

*(Revised March 1975)

Section I. Channel clearing extending from the highway bridge at Winters to a point approximately 1 mile upstream from the bridge at Interstate 80, Contract No. DA04-167-Eng-1453, H. Earl Parker, * Inc., Contractors. Drawing 50-6-2581.

Section II. Channel improvement and levee construction extending along both banks of Putah Creek from a point approximately 1 mile upstream from the bridge at Interstate 80 to the Yolo Bypass, * Contract No. W-04-167-Eng-1453, H. Earl Parker, Inc., Contractors. Drawing 50-4-2396.

Section III. Levee construction along the westerly edge of the Yolo Bypass extending from the Yolo Causeway southerly 3 miles to the north levee of Putah Creek, Contract No. W-94-167-Eng-1191, A. Teichert and Son, Inc., Contractors. Drawing 50-4-2280.

1-06. Flood Flows. For purposes of this manual, the terms "flood" or "high water period" shall refer to flows when the water surface in Putah Creek reaches or exceeds the reading of 25.0 on the Putah Creek recording gage 6 miles west of Winters; it also applies to floods in the Yolo Bypass rising above the reading of 32.5 on the California Department of Water Resources and U.S. Geological Survey jointly operated gaging station just upstream from the Sacramento Northern Railroad bridge. A flowstage relationship at the Putah Creek recording station is shown on the rating curve in exhibit H.

1-07. Assurances Provided by Local Interests. Assurance of cooperation by local interests is provided by state legislation, as contained in Chapter 3, Part 2, Division 5 of the State Water Code. (See paragraph 2-02a of the Standard Manual.)

1-08. Superintendent. The name and address of the Superintendent appointed by local interests to be responsible for the continuous inspection, operation, and maintenance of the project works shall be furnished the District Engineer, and in case of any change of Superintendent, the District Engineer shall be so notified.

*(Revised March 1975)

SECTION II

FEATURES OF THE PROJECT SUBJECT TO FLOOD CONTROL REGULATIONS

2-01. Channels.

a. Description. The principle structures consist of:

(1) Cleared Channel. The channel of Putah Creek from the highway bridge at Winters to a point approximately one mile upstream from the bridge at Interstate 80 was cleared of trees and brush and in some places the channel invert was rough graded to eliminate islands, humps or bars. In the reach between the highway bridge at Winters and the easterly limits of the town of Winters, a distance of approximately 0.5 miles, the clearing was limited to the removal of a few trees. The channel was left undisturbed because of the Winters Dam and the sewage filter bed, both of which are located in the channel within this reach. *

(2) Improved Channel. The channels of Putah Creek from a point approximately one mile upstream from the bridge at Interstate 80 to the Yolo Bypass was cleared and improved by excavation as an incidental part of levee construction work described in paragraph 2-02a. The material excavated from the channel was used in the levee embankment.

b. Inspection.

(1) Pertinent Requirements of the Code of Federal Regulations. Flood Control Regulations, paragraph 208.10 (g) (1) are quoted in part as follows:

"(g) Channels and Floodways.....(1) Maintenance. Periodic inspections of improved channels and floodways shall be made by the Superintendent to be certain that:

(i) The channel or floodway is clear of debris, weeds, and wild growth; [See note at end of subparagraph (6), paragraph 2-01 c.] *

(ii) The channel or floodway is not being restricted by the depositing or waste materials, building or unauthorized structures or other encroachments;

(iii) The capacity of the channel or floodway is not being reduced by the formation of shoals;

(iv) Banks are not being damaged by rain or wave wash, and that no sloughing of banks has occurred;

*(Revised March 1975)

(v) Riprap sections and deflection dikes and walls are in good condition;

(vi) Approach and egress channels adjacent to the improved channel or floodway are sufficiently clear of obstructions and debris to permit proper functioning of the project works.

Such inspections shall be made prior to the beginning of the flood season and otherwise at intervals not to exceed 90 days. Immediate steps will be taken to remedy any adverse conditions disclosed by such inspections..."

(2) The purpose of the flood-flow channel inspection is to insure that conditions which affect the channel capacity will remain the same, as far as possible, as those considered in the design assumptions and that no new conditions develop that may affect the stability of the project structures. At each inspection required by paragraph 208.10 (b) (1) of the Flood Control regulations, particular attention will, therefore, be given the following:

(a) Location, extent and size of vegetal growth.

(b) Unauthorized operations within the flood-flow channel right-of-way, such as excavations, buildings, and other structures, levees, bank protection, or training dikes.

(c) Rubbish and industrial waste disposal.

(d) Changes in the channel bed such as aggradation or degradation, which would interfere with free-flow from side drainage structures or induce local meanders that would scour the banks.

(e) Operations of any nature upstream from the project that would affect flow conditions within the limits of the flood control project.

(f) Condition of project structure.

1. Channel walls:

a. Deviation from alignment and grade.

b. Development of cracks and spalls.

c. Mechanical injuries.

2. Fencing:

a. Injuries to posts, fencing or barbed wire.

b. Damage to galvanizing.

3. Earth fills:

a. Settlement.

b. Erosion of backslopes.

c. Excessive seepage or saturation area back of fills.

d. Condition of bank protection - concrete or stone blanket.

4. Right-of-way:

a. Presence of dumped refuse.

b. Encroachment or trespass.

(3) No excavation within the limits of the Putah Creek Channel will be permitted unless an excavation permit has been approved by the State Reclamation Board.

(4) If any work is done to improve flow conditions in Putah Creek above the project, it should be coordinated with the District Engineer to insure that proper provisions are made for channel alignment and capacity to conform to the existing project.

(5) The intent of these inspections is to disclose all conditions which in any way affect the stability of the structures and their functioning for the control of floods. Each inspection report should note and comment on any repair measures that have been taken since the last inspection. In making these inspections, the check sheets included as exhibit E shall be explicitly followed.

c. Maintenance.

(1) Pertinent Requirements of the Code of Federal Regulations. Flood Control Regulations, paragraph 208.10 (g) (1), are quoted in part as follows: ".....Immediate steps will be taken to remedy any adverse conditions disclosed by such inspection..."

(2) Shoaling or aggradation at the inlets or outlets of side drainage structures may render them inoperative. It is, therefore, imperative that all drains be kept open and unobstructed at all times.

(3) Dumped rock or other suitable types of protection should be placed at locations found by experience to be critical trouble points, with a view to stablizing the channel alignment and preserving the general uniformity of the bank lines.

(4) Sediment and debris plugs or other obstructions should be removed from the channel to prevent any tendency for the flows to be deflected within the channel. The heavy material likely to accumulate in the new channel at the mouths of tributaries should be removed to keep the channel clear.

(5) The channel and right-of-way shall be kept reasonably clear of debris, refuse matter, or industrial wastes.

(6) Vegetal growth in the channel which may obstruct flood flows shall be cut in advance of the flood season, and together with all debris, removed from the channel.

Note *

Since construction of Monticello Dam has substantially decreased the expected design flows in the channel, it has been concluded that certain vegetal growth will be allowed in the stream waterway to compensate for this reduction in flood flows. If flood flow experience indicates that the allowed vegetal growth is reducing the waterway to a degree that encroaches into the design levee and channel bank freeboard, such clearing will be performed to provide the necessary waterway to accomodate the project design flow. The allowable growth would be approximately as shown on Exhibit I in 7 sheets.

(7) All eroded concrete shall be repaired as soon as erosion approaches a depth of 4 inches. For this purpose, it is recommended that the repair be made by thoroughly cleaning the surface by sandblasting and building up the section with pneumatically placed Portland cement mortar. All evidence of settlement, uplift, or failure of concrete structures shall be referred to the State Engineer for analysis and remedial measures.

(8) All damage to fencing, whether resulting from accidental or willful injuries or from corrosion, shall be promptly repaired with new material in order to maintain satisfactory protection to the public.

(9) All subdrainage structures which have become cemented due to the evaporation of ground water or other causes, shall be thoroughly cleaned out and repacked with fresh gravel.

*(Revised March 1975)

d. Operation.

(1) Pertinent Requirements of the Code of Federal Regulations. Flood Control Regulations, paragraph 208.10 (g) (2), are quoted in part as follows:

> "(g) Channels and floodways. (2) Operation. Both banks of the channel shall be patrolled during periods of high water.... Appropriate measures shall be taken to prevent the formation of jams... of debris. Large objects which become lodged against the bank shall be removed. The improved channel or floodway shall be thoroughly inspected immediately following each major highwater period. As soon as practicable thereafter all snags and other debris shall be removed and all damage to.... walls, drainage outlets or other flood control structures repaired."

(2) It shall be the duty of the Superintendent to maintain a patrol of the project works during all periods of flow in excess of a reading of 25.0 on the recording gage at the station 6 miles west of Winters, as indicated in paragraph 1-06 of this manual. The Superintendent shall dispatch a message by the most suitable means to the District Engineer whenever the water surface in the channel reaches the gage reading of 25.0 feet. The Superintendent shall also cause readings to be taken at the gage at intervals of one to two hours during the period when the water surface is above the floodflow stage indicated above and record the time of the observations. One copy of the reading shall be forwarded to the District Engineer immediately following the flood, and a second copy transmitted as an inclosure to the semi-annual report in compliance with paragraph 3-03c of the standard manual.

2-02. Levees

a. Description. The levees described in this manual are located on both banks of Putah Creek and on the westerly edge of the Yolo Bypass. The north levee of Putah Creek begins at a point 0.81 mile upstream from the bridge at Interstate 80, 2 miles southwest of Davis, California, and extends downstream * to the west levee of the Yolo Bypass. The south levee of Putah Creek begins at a point 1.52 miles upstream from the bridge of Interstate 80 and extends down- * stream to the westerly edge of the Yolo Bypass, terminating at high ground above the flood plane profile. The west levee of the Yolo Bypass is located on the westerly edge of the Yolo Bypass and extends from the Yolo Causeway southerly 3 miles to the north levee of Putah Creek. All levees of this unit were built to adopted grade and section by new construction and provide a freeboard above the flood plane profile as indicated in paragraph 1-02 of this manual. The crown of the levee was surfaced with crushed rock 4 inches in depth and 12 feet in width, as indicated on Drawing No. 50-4-2396, sheets 2 and 4 (see Exhibit B). Required turnouts and road approaches were constructed. These items are shown in the drawings of Exhibit B. Structures affecting levee maintenance are listed in Exhibit E.

*(Revised March 1975)

b. Inspection.

(1) Pertinent Requirements of the Code of Federal Regulations. Flood Control Regulations, paragraph 208.10 (b) (1), are quoted in part as follows:

"(b) Levees - (1) Maintenance....Periodic inspection shall be made by the Superintendent.... to insure that:

(i) No unusual settlement, sloughing, or material loss of grade or levee cross section has taken place;

(ii) No caving has occurred on either the landside or the riverside of the levee which might affect the stability of the levee section;

(iii) No seepage, saturated areas, or sand boils are occurring;

(iv) Toe drainage systems and pressure relief wells are in good working condition, and that such facilities are not becoming clogged;

(v) Drains through the levees and gates on said drains are in good working condition;

(vi) No revetment work or riprap has been displaced, washed out, or removed;

(vii) No action is being taken, such as burning grass and weeds, during inappropriate seasons, which will retard or destroy the growth of sod; (see Note (a) at end of subparagraph (1).

(viii) Access roads to and on the levee are being properly maintained;

(ix) Cattle guards and gates are in good condition;

(x) Crown of levee is shaped so as to drain readily, and roadway thereon, if any, is well shaped and maintained;

(xi) There is no unauthorized grazing or vehicular traffic on the levees;

(xii) Encroachments are not being made on the levee right-of-way which might endanger the structure or hinder its proper and efficient functioning during time of emergency.

Such inspections shall be made immediately prior to the beginning of the flood season immediately following each major high water period, and otherwise at intervals not exceeding 90 days; and such intermediate times as may be necessary to insure the best possible care of the levee..."

Note (a)

Since the growth of sod on the slopes of the levees of this project is not practicable and as the nature of the levee growth warrants burning thereof to facilitate inspection, the provisions of subparagraph b(1) of the regulations inconsistent therewith shall not apply. In place of item (vii), therefore, the following shall be observed:

Weeds, grasses and debris on the levee are burned during appropriate seasons, where not dangerous or impracticable, in order to permit the detection of cracks, holes, burrows, slips, and other damage and to permit the detection and extermination of burrowing animals and that grass and weeds on levee slopes be mowed where removal by burning is dangerous or impracticable, such as on peat levees or where burning would constitute a hazard.

(2) To insure the taking of such maintenance measures as will be required for proper functioning of the levee, the following items shall be specifically covered in each inspection:

(a) Aggradation or degradation of the stream bed along the toe.

(b) Settlement of levee fill.

(c) Erosion of both slopes of levee.

(d) Presence of seepage, saturated areas, or sand boils back of levee.

(e) Condition of access roads and levee surfacing.

c. Maintenance.

(1) Repairs to Levee Embankment. Methods used for repair or reconstruction of the levee fill will depend on the extent of the damaged section. If of small extent, the most suitable method will be to bring the levee back to line and grade by a fill made in 6-inch layers of earth free from brush, roots or other unsuitable material. If of larger extent, the fill should be made in the same manner as the original construction, of selected material from the borrow pits approved for the project, placed in uniform layers of loose material and not more than 6 inches in depth and compacted in accordance with the specifications under which the work was completed.

(2) Depredations of Burrowing Animals. Dens and runways formed within the levee by burrowing animals are frequently the causes of levee failures during flood stages. Burrowing animals such as muskrats, ground hogs, ground squirrels, moles and gophers, found in the levee should be exterminated. The dens and runways should be opened up and thoroughly compacted as they are backfilled. Levees kept properly cleared are not seriously menaced by burrowing animals as they prefer areas where a protective cover, such as high grass, weeds, and brush, is found. Several methods of extermination are found effective, such as trapping, baiting, and poison gases, depending on the type of animal present and the time of year the work is done. Advice concerning the best methods in each locality can be obtained from the County Agricultural Agent.

(3) Access Roads. Access Roads to the levees shall be maintained in such condition that they will be accessible at all times to trucks used to transport equipment and supplies for maintenance or flood fighting.

d. Operation.

(1) Pertinent Requirements of the Code of Federal Regulations. Flood Control Regulations paragraph 208.10 (b) (2) is quoted in part as follows:

"(2) Operation. During flood periods, the levee shall be patrolled continuously to locate possible sand boils or unusual wetness of the landward slope to be certain that:

(i) There are no indications of slides or sloughs developing;

(ii) Wave wash or scouring action is not occurring;

(iii) No low reaches of levee exist which may be overtopped;

(iv) No other conditions exist which might endanger the structures;

(v) Appropriate advance measures will be taken to insure the availability of adequate labor and materials to meet all contingencies. Immediate steps will be taken to control any condition which endangers the levee and to repair the damaged section."

2-03. Drainage and Irrigation Structures.

a. Description. Drainage and irrigation structures provided in the project works are located and described as follows:

(1) Corrugated metal pipes extending through the levees to drain the areas adjacent to the Putah Creek channel are as listed in the following table:

Location Station	Bank	C. M. P.	Gate Model No. (a)	Description
0+62	Left	48"	100	(b)
T1+45	Right	36"	100	(b)
1+50 PCT	Left	24"	100	(b)
172+00 PCT	Left	24"	100	(c)
183+97 PCT	Left	24"	100	(c)
193+20 PCT	Left	24"	100	(c)
197+60 PCT	Right	24"	100	(b)
225+15 PCT	Left	24"	100	(c)
262+30 PCT	Left	48"	100	(b)
	West Levee Yolo Bypass			
80+00		48"	100	(b)

(2) Corrugated metal pipes extending through the levees to irrigate the areas adjacent to the Putah Creek channel are as listed in the following table:

Location Station	Bank	C. M. P.	Gate Model No. (a)	Description
17+71	Left	24"	101	(c)
31+00	Left	24"	101	(c)
G198+85	Left	24"	101	(b)
12+65	Right	24"	1001	(b)
T16+70	Left	24"	101	(b)
P213+00	Left	24"	101	(c)
P233+00	Right	24"	101	(c)
P239+20	Left	24"	101	(c)
P265+70	Right	24"	101	(c)
17+00 PCT	Left	24"	101	(b)
30+15 PCT	Right	24"	101	(c)
31+50 PCT	Left	24"	101	(c)
50+72 PCT	Right	24"	101	(c)
56+25 PCT	Left	24"	101	(c)
83+70 PCT	Left	24"	101	(c)
84+40 PCT	Left	24"	101	(c)
97+00PCT	Left	24"	101	(c)
98+00 PCT	Right	24"	101	(c)
108+00 PCT	Left	24"	101	(c)
109+75 PCT	Right	24"	101	(c)
136+40 PCT	Right	24"	101	(c)
145+50 PCT	Left	24"	101	(c)
158+60 PCT	Right	24"	101	(c)
163+23 PCT	Left	24"	101	(c)
177+80 PCT	Right	24"	101	(c)
193+00 PCT	Right	24"	101	(c)
204+00 PCT	Left	24"	101	(c)
208+00 PCT	Right	24"	101	(c)
241+50 PCT	Left	24"	101	(c)
237+50 PCT	Right	24"	101	(c)
244+20 PCT	Left	24"	101	(c)
258+12 PCT	Left	8"	101	(c)

Notes pertaining to tables: (a) Gate Model No. 100 is a Calco automatic drainage gate on outlet end of pipe. It closes against face pressure and opens automatically to permit outflow when pressure is released.

Gate Model No. 101 is a Calco slide gate which operates by handscrew on a steel frame.

Gate Model No. 1001 is a combination gate which includes the features of gates No. 100 and 101.

(b) With 2 C.M. cut-off walls, 1 reinforced concrete headwall and 1 saddle and apron with cobble paving on channel side.

(c) With 2 C.M. cut-off walls, 2 reinforced concrete headwalls and 1 saddle and apron.

b. Inspection.

(1) Pertinent Requirements of the Code of Federal Regulations. Flood Control Regulations, paragraph 208.10 (d)(1), are quoted in part as follows:

"(d) Drainage Structures (1) Maintenance - Adequate measures shall be taken to insure that inlet and outlet channels are kept open and that trash, drift, or debris is not allowed to accumulate near drainage structures. Flap gates and manually operated gates and valves on drainage structures shall be examined, oiled and trial operated at least once every 90 days ..... Periodic inspections shall be made by the Superintendent to be certain that:

(i) Pipes, gates, operating mechanism, riprap and headwalls are in good condition;

(ii) Inlet and outlet channels are open;

(iii) Care is being exercised to prevent the accumulation of trash and debris near the structures and that no fires are being built near bituminous coated pipes;

(iv) Erosion is not occurring adjacent to the structures which might endanger its water tightness or stability.

Immediate steps will be taken to repair damage, replace missing or broken parts, or remedy adverse conditions disclosed by such inspections."

(2) At each inspection required by paragraph 4-02(b)(2), of the Standard Manual, the following items, if applicable, shall be particularly noted:

(a) Debris or other obstructions to flow.

(b) Condition of pipes and gates.

(c) Damage or settlement of pipe.

(d) Condition of concrete - cracks, spalls, erosion.

c. Maintenance.

(1) All eroded concrete shall be repaired as soon as any reinforcing steel is exposed. For this purpose it is recommended that the repair be made by thoroughly cleaning the surface by sand-blasting and building up the concrete to its original section with pneumatically-placed Portland cement mortar. All evidences of settlement, uplift, or failure of concrete structures should be referred to the State Engineer for analysis and recommendation of remedial measures.

(2) If the inspection shows that the automatic drainage structures have been jammed in an open position by debris or other obstructions, they shall be thoroughly cleaned so that they swing freely to a true closure. If any parts of the gates have been damaged or broken, they shall be replaced by new parts.

(3) Compliance with the provisions prescribed above pertaining to drainage structures is essential for proper maintenance of the levee system covered by this manual. Levee failures caused by neglected drainage structures are of common occurrence; it is, therefore, of utmost importance that these structures always be kept in perfect working condition in accordance with the regulations.

(4) Care should be taken not to bury any of the side drainage inlets in the event that it becomes necessary to fill any of the low-lying pockets in back of the levee. Plans for the maintenance of drainage facilities at any such points should be submitted to the State Engineer for approval before such work is started.

d. Operation.

(1) Pertinent Regulations of the Code of Federal Regulations. Flood Control Regulations, paragraph 208.10 (d)(2), is quoted in part as follows:

Operation. Whenever high water conditions impend, all gates will be inspected a short time before water reaches the invert of the pipe and objects which might prevent closure of the gate shall be removed. Automatic gates shall be closely observed until it has been ascertained that they are securely closed..... All drainage structures in the levees shall be inspected frequently during floods to ascertain whether seepage is taking place along the lines of their contact with the embankment. Immediate steps shall be taken to correct any adverse conditions."

(2) The outlets of side drainage structures inundate at relatively low river stages. They should, therefore, be inspected at the first sign of a rise in the river to make certain that the gates are not jammed in an open position and thus allow waters to enter behind the levee.

2-04. Miscellaneous Facilities.

a. Description. Miscellaneous structures or facilities which were constructed as a part of, or in conjunction with, the protective works, and which might affect their functioning, include the following:

(1) A concrete retaining wall constructed adjacent to the University of California sewage filter bed. The proximity of the University of California sewage filter bed necessitated the construction of a concrete levee for a distance of 310 feet fronting the sewage filter bed.

(2) Because of its poor condition, the Liberty Island Road bridge which crossed Putah Creek at Station 0+00 = P267+33.49 was dismantled by local interests and was replaced by low-water crossing financed jointly by the counties of Solano and Yolo and the State Reclamation Board.

(3) Minor changes were made in some utilities, but most of them were left undisturbed during the channel improvement work.

SECTION III

REPAIR OF DAMAGE TO PROJECT WORKS AND METHODS OF COMBATING FLOOD CONDITIONS

3-01. Repair of Damage. In the event of serious damage to the project works, whether due to flood conditions or other causes, and which may be beyond the capability of local interests to repair, the Superintendent will contact a representative of the Division of Water Resources, State of California, who coordinates maintenance of project works of the Sacramento River Flood Control Project. The State representative will give assistance or advice, or will determine appropriate action to be taken.

3-02. Applicable Methods. For applicable methods of combating flood conditions, reference is made to Section V of the Standard Manual, where the subject is fully covered.

EXHIBIT A

FLOOD CONTROL REGULATIONS
(See Standard Manual)

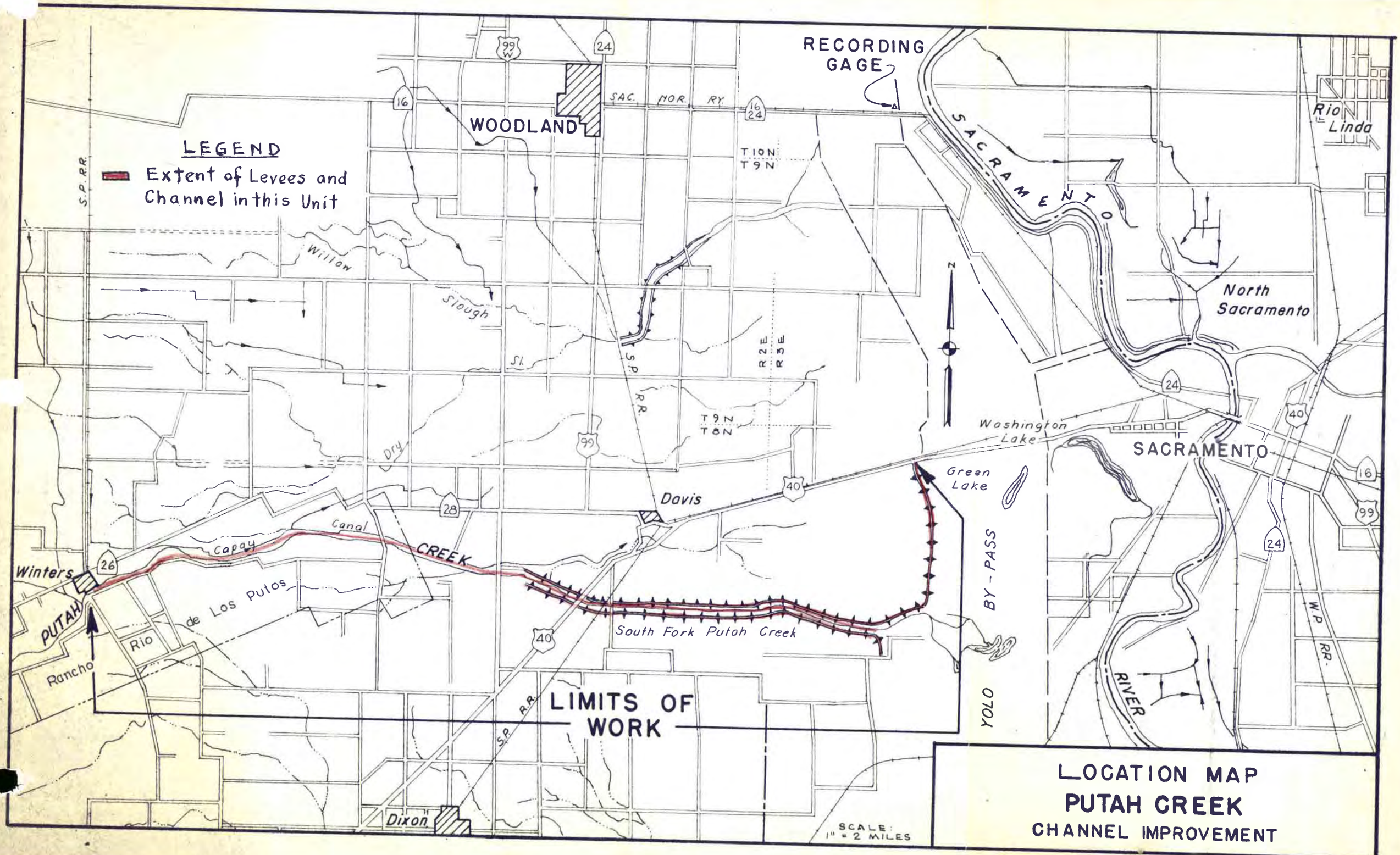
LEGEND
Extent of Levees and Channel in this Unit
RECORDING GAGE
WOODLAND
SAC. NOR. RY.
T 10 N
T 9 N
SACRAMENTO
Rio Linda
North Sacramento
Willow Slough
Sl.
S.P. RR.
R 2 E.
R 3 E
T 9 N
T 8 N
Dry
Washington Lake
SACRAMENTO
Green Lake
Davis
Canal
Capay
CREEK
Winters
PUTAH
Rio de Los Putos
Rancho
South Fork Putah Creek
BY-PASS
YOLO
RIVER
W.P. RR.
LIMITS OF WORK
Dixon
SCALE: 1" = 2 MILES
LOCATION MAP
PUTAH CREEK
CHANNEL IMPROVEMENT

EXHIBIT A-1

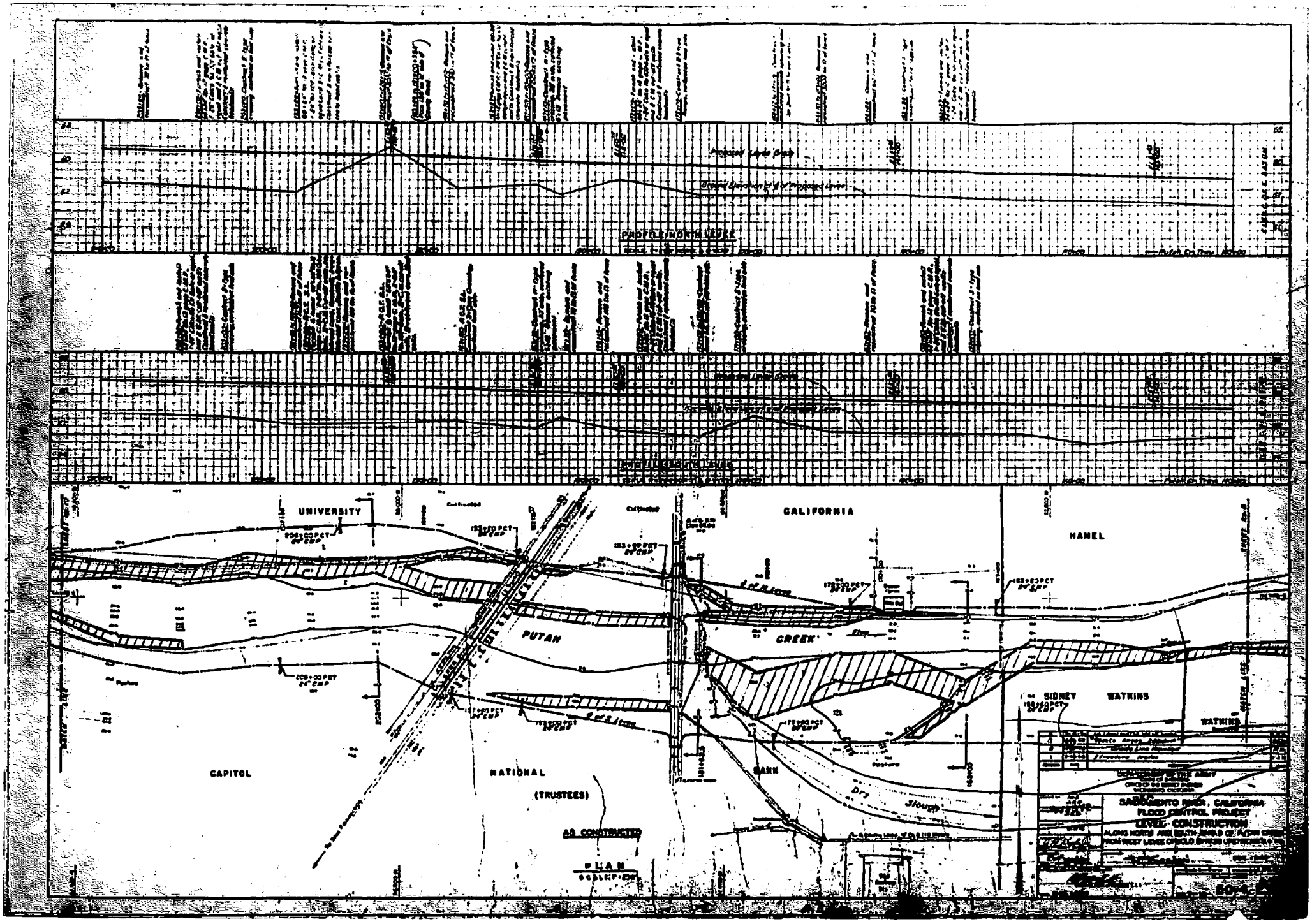
PROFILE NORTH LEVEE
PROFILE SOUTH LEVEE
UNIVERSITY
CALIFORNIA
HAMEL
PUTAN
CREEK
SIDNEY
WATKINS
CAPITOL
NATIONAL
(TRUSTEES)
BANK
Dry
Slough
AS CONSTRUCTED
PLAN
SACRAMENTO RIVER, CALIFORNIA
FLOOD CONTROL PROJECT
LEVEE CONSTRUCTION

EXHIBIT "B"

"AS CONSTRUCTED"

DRAWINGS

See separate folder for the following drawings:

50-4-2280	West Levee of Yolo Bypass from Causeway Southerly 3.0 miles, sheets 1 and 2.
50-4-2396	Levee Construction along North and South Banks of Putah Creek from West Levee of Yolo Bypass upstream 9.4 miles, sheets 1 thru 16.
50-6-2581	Putah Creek Channel Clearing from approx. 1 mile above U.S. 40 Highway Bridge upstream to Winters, sheets 1 thru 9.
50-4-1825	Sacramento River Flood Control Project - Standard Irrigation and Drainage Structures, 1 sheet.

EXHIBIT B
Unattached

EXHIBIT C

PLATES OF SUGGESTED FLOOD FIGHTING METHODS
(See Standard Manual)

EXHIBIT D

CHECK LIST NO. 1

LEVEE INSPECTION REPORT
(See Standard Manual)

EXHIBIT E

For definition of "flood" or "high water period" see paragraph 1-06 of this manual.

CHECK LIST NO. 2

LEVEES OF PUTAH CREEK

Inspector's Report Sheet No. ____ Inspector _____

Date _____ Superintendent _____

Item	Remarks
(a) Location by Station	
(b) Settlement, sloughing, or loss of grade.	
(c) Erosion of both slopes.	
(d) Condition of roadways, including ramps.	
(e) Evidence of seepage.	
(f) Condition of farm gates and fencing.	
(g) Maintenance measures taken since last inspection.	
(h) Condition of retaining walls and outlets	
(i) Comments.	

Instructions for Completing Sheet 2, Exhibit E.
(To be printed on back of sheet 2)

Item (a) Indicate levee station of observation, obtained by pacing from nearest reference point; indicate right or left bank.

Item (b) If sufficient settlement of earth work has taken place to be noticeable by visual observation, indicate amount of settlement in tenths of a foot. If sloughing has caused a change in slope of the embankment sections, determine the new slope. Note areas where erosion or gullying of the section has occurred.

Item (c) If sufficient erosion or gullying of back face or back toe of levee has taken place to be noticeable by visual inspection, indicate area affected and depth.

Item (d) Note any natural change in grade and section of roadway or ramps. Indicate any inadequacy in surface drainage system.

Item (e) Indicate any evidence of seepage through the embankment section.

Item (f) Indicate the serviceability of all farm gates across the embankments and roadways, and indicate if repainting is required.

Item (g) Indicate maintenance measures that have been performed since last inspection and their condition at the time of this inspection

Item (h) Record opinion, if any, of contributory causes for conditions observed and also any observations not covered under other columns.

NOTE: One copy of the Inspector's Report is to be mailed to the District Engineer immediately on completion, and one copy is to be attached to and submitted with the Superintendent's semi-annual report.

CHECK LIST NO. 3

CHANNEL AND RIGHT-OF-WAY

Inspector's Report Sheet No. _____ Inspector _____

Date _____ Superintendent _____

Item	Remarks
(a) Name of channel and location by stations.	
(b) Vegetal growth in channel	
(c) Debris and refuse in channel	
(d) New construction within right-of-way.	
(e) Extent of aggradation or degradation	
(f) Condition of riprapped section	
(g) Condition of bridges	
(h) Measures taken since last inspection	
(i) Comments	

Instructions for Completing Sheet 4, Exhibit E
(To be printed on the back of sheet 4)

Item (a) Indicate station of observation obtained by pacing from nearest reference point.

Item (b) Note nature, extent, and size of vegetal growth within the limits of the flood flow channel.

Item (c) Note nature and extent of debris and refuse that might cause clogging of the conduits of the irrigation intake works, fouling of the tainter gates, or the bridges over the channel.

Item (d) Report any construction along the diversion channel or above the diversion works that has come to the attention of the inspector and that might affect the functioning of the project.

Item (e) Indicate any change in grade or alignment of the channels, either by deposition of sediment or scour, that is noticeable by visual inspection. Estimate amount and extent.

Item (f) Indicate any change that has taken place in the riprap such as disintegration of the rock, erosion, or movement of the rock. Note the presence of vegetal growth through the riprap.

Item (g) Note any damage or settlement of the footings of the bridges. Indicate condition of wooden structures and if repainting is required. Indicate condition of bridge approaches, headwalls, and other appurtenances.

Item (h) Indicate maintenance measures that have been performed since the last inspection and their condition at time of this inspection.

Item (i) Record opinion, if any, of contributory causes for conditions observed, and also any observations not covered under other columns.

NOTE: One copy of the Inspector's Report is to be mailed to the District Engineer immediately on completion, and one copy is to be attached to and submitted with the Superintendent's semi-annual report.

CHECK LIST NO. 4

DRAINAGE AND IRRIGATION STRUCTURES

Inspector's Report Sheet No. _____

Date _____

Inspector _____

Superintendent _____

(a) Location by Station	(b) Bank	(c) Debris or other obstruction to flow	(d) Damage or settlement of pipe or conduit	(e) Condition of concrete headwall or invert paving	(f) Condition of right-of-way adjacent to structure	(g) Repair measures taken since last inspection	(h) Comments
PUTAH CREEK							
0+62	Left						
12+65	Right						
17+71	Left						
31+00	"						
G 198+85	"						
T 1+45	Right						
T 16+70	Left						
P 213+00	"						
P 233+00	Right						
P 239+20	Left						
P 265+70	Right						
1+50 PCT	Left						
17+00 PCT	Left						
30+15 PCT	Right						
31+50 PCT	Left						
50+72 PCT	Right						
56+25 PCT	Left						
83+70 PCT	"						
84+40 PCT	"						

CHECK LIST NO. 4

DRAINAGE AND IRRIGATION STRUCTURES

Inspector's Report Sheet No. _____ Inspector _____

Date _____ Superintendent _____

(a) Location by Station	(b) Bank	(c) Debris or other obstruction to flow	(d) Damage or settlement of pipe or conduit	(e) Condition of concrete headwall or invert paving	(f) Condition of right-of-way adjacent to structure	(g) Repair measures taken since last inspection		(h) Comments
	Putah Creek							
97+00 PCT	Left							
98+00 PCT	Right							
108+00 PCT	Left							
109+75 PCT	Right							
136+40 PCT	Right							
145+50 PCT	Left							
158+60 PCT	Right							
163+23 PCT	Left							
172+00 PCT	Left							
177+80 PCT	Right							
183+97 PCT	Left							
193+00 PCT	Right							
193+20 PCT	Left							
197+60 PCT	Right							
204+00 PCT	Left							
208+00 PCT	Right							
225+15 PCT	Left							
237+50 PCT	Right							
241+50 PCT	Left							

CHECK LIST NO. 4

DRAINAGE AND IRRIGATION STRUCTURES

Inspector's Report Sheet No. _____ Inspector _____

Date _____ Superintendent _____

(a) Location by Station	(b) Bank	(c) Debris or other obstruction to flow	(d) Damage or settlement of pipe or conduit	(e) Condition of concrete headwall or invert paving	(f) Condition of right-of-way adjacent to structure	(g) Repair measures taken since last inspection	(h) Comments
Putah Creek							
244 + 20 PCT	Left						
258 + 12 PCT	Left						
262 + 30 PCT	Left						
West Levee Yolo By-Pass:							
80 + 00	Right						

Instructions for completing sheets 6, 7, and 8, Exhibit E
(To be printed on backs of sheets 6, 7, and 8)

(1) Enter station of all structures under column (a) for check list.

(2) Inspect inlet, barrel, and outlet for accumulation of sediment, rubbish, and vegetal matter.

Note condition under column (c).

(3) If any settlement or damage to the pipe, barrel, or invert of the drain has occurred, estimate the location and amount. Note particularly if any of the backfill has come into the pipe or been disturbed. Record observations under column (d).

(4) Inspect the concrete portions of the structures for evidence of settlement, cracks, "pop-outs", spaces, abrasive wear, or other deterioration. Record conditions under column (e).

(5) Inspect backfill area adjacent to structure for evidence of erosion caused by overflow of the drainage structure and note conditions in column (f).

(6) Under column (g) indicate physical measures that have been taken to correct conditions reported in last inspection, and their condition at time of this inspection.

(7) Under column (h) record opinion, if any, of contributory causes for conditions observed, and also any observations not covered under other columns.

(8) A copy of the Inspector's Report is to be mailed to the District Engineer immediately on completion, and a record copy shall be attached to the Superintendent's semi-annual report.

EXHIBIT F

LETTER OF ACCEPTANCE

BY STATE RECLAMATION BOARD

STATE RECLAMATION BOARD

February 27, 1975

C
O
P
Y

C
O
P
Y

District Engineer
Sacramento District
U. S. Army Corps of Engineers
650 Capitol Mall
Sacramento, CA 95814

Dear Sir:

Your letter of November 18, 1974 transmitted a draft of the proposed revision to the Operation and Maintenance Manual, "Putah Creek Channel and Levees and West Levee of Yolo Bypass from Yolo Causeway Downstream 3 Miles - Unit No. 119" for review and comments.

The draft revision has been reviewed by the Central District and the legal staff of the Department of Water Resources and has been found to be satisfactory. The Reclamation Board therefore concurs with the conclusions by the Corps of Engineers as reflected in the subject draft revision.

Sincerely,

/s/A. E. McCollam
A. E. McCOLLAM
Chief Engineer and
General Manager

EXHIBIT F

2

This copy was furnished on 24 Feb. 1953 b de A.

Accepted items

December 18, 1951

The Board accepted the transfer from the Corps of Engineers, in letters of dates listed below, the following reaches of levees and their contiguous waterway banks where applicable for flood control operation and maintenance, as complete and meeting the requirements of the Sacramento River Flood Control Project.

	No.	Date of Letter	Levee Location	Remarks
1-2	1	1 Dec.1951	N. and S. Training* Levees Moulton Weir*	Maintained by State
3-4	1	Do	N. and S. Training* Levees Colusa Weir*	Maintained by State
6	2	3 Dec.1951	W. Levee Sacramento River, Mile 177.5 Mile 174.1	Maintained as Maintenance Area No. 2
9	3	4 Dec.1951	E. Levee Yolo By-pass Fremont* Weir to Miner Slough*	N. 2 mi. maintained by State. Remainder by local districts. Conditioned upon completion of levee section and no acceptance of banks of Sacramento Deep Water Channel.
10 11	3	Do	N.&S. Levees Sacramento By-pass*	Maintained by State. Waterward slopes on 4 to 1 not required.
21a	4	6 Dec.1951	Back levee Egbert District*	Maintained by R. D. No. 536
22	4	6 Dec.1951	W. Levee Yolo By-pass Lindsey* Slough to Watson Hollow Drain*	Maintained by R. D. No. 536
24	4	Do	N.Levee Watson Hollow Drain*	Do
16	5	6 Dec.1951	W.Levee Sacramento River Mile 59.0 to Lake Washington Barge Canal	Maintained by R. D. No. 900
18	5	Do	W. Levee Sacramento Riv.Mile 50.8 to 50.5	Bank protection contract. Maintained by R. D. No. 765

Copy to USED.

1

3

Accepted Items

No.	Date of Letter	Levee Location	Remarks
6 (12)-(13)-(14)-(15)	6 Dec.1951	Levees of Wadsworth Canal* South levees of E. and W. Intercepting Canals.	Maintained by State. Waterward slopes on 4 to 1 not required.
7 = 329 (87-A)	7 Dec.1951	Site 2 Part A. W.Levee Sacramento River-Mile 28.5 -Grand Island.	Maintained by R.D. No. 3. Completed contract.
= 331 (89-A)		Site 1,Part B. E. levee Sacramento River-Mile 15.0 Brannan Island.	Maintained by R.D.No. 2067 Completed contract.
8 (51)-(52)-(53)-(54)-(55)-(56)-(57)	8 Dec.1951	W. levee Sacramento River Mile 163.8 to Mile 143.5 except 320 ft. at Colusa Warehouse & Mile 146.1 to Mile 146.4.	Maintained as Maintenance Area No. 1.
8 (58)-(59)-(60)-(61)-(62)-(63)	Do	E. levee Sacramento River, Mile 153.3 to Mile 152.7; Mile 149.9 to Mile 149.7; Mile 149.4 to Mile 149.0; at Colusa Weir; Mile 143.3 to Mile 140.2;Mile 139.3 to Mile 138.2.	Maintained by State Separate completed contracts.
8 (64)-(65)-(66)-(67)-(68)-(69)-(70)	Do	E. levee Sacramento River Mile 138.2 to Mile 137.9; Mile 136.9 to Mile 133.8; Mile 133.2 to Mile 132.3; Mile 131.8 to Mile 125.9; Mile 125.8 to Mile 123.1; Mile 122.6 to Mile 122.0.	Maintained by R.D.No. 70, Completed contracts.
(71)-(72)-(73) 8	Do	West levee,Sutter By-pass*	Maintained by R.D.Nos. 70, 1660, 1500.Condition upon completion of remaining part to standard section.
(74) 8	Do	North levee Tisdale By-pass*	Maintained by R.D.No. 1660. Waterward slope of 4 to 1 not required.
(75) 8	Do	South levee Tisdale By-pass*	Maintained by R.D.No.1500. Waterward slope of 4 to 1 not required.
(76) 8	Do	East levee Sutter By-pass*.	Maintained by State.
(81) 9	Do	W. levee Sacramento River Mile 35.15 to 35.86.	Maintained by R.D.No. 150 (Merritt Island).Completed contract bank protection.

4

Accepted Items

	No.	Date of Letter	Levee Location	Remarks
91	10	8 Dec. 1951	Cross levee Steamboat Slough to Sacramento River.*	Maintained by R.D. No. 3 (along U.S.spoil bank).
140	11	Do	N. levee American River from Jibboom St.Bridge to Sacramento River.	Maintained by R.D. No. 1000.
141	11	Do	E. levee Sacramento River American River to Natomas Cut.	Maintained by R.D.No. 1000.
142	11	Do	E. bank Sacramento River At Moulton Weir.	Maintained by State.
143	11	Do	E. Levee Sacramento River Mile 158.5 to Mile 164.4.	Maintained partly by State; remainder by Levee District.No. 3, Glenn County, Completed Contract.
146	11	Do	W. levee Sacramento River Mile 61.8 to Mile 62.65.	Maintained by Maintenance Area No. 4. Completed contract.
147	11	Do	W. Levee Sacramento River Mile 62.65 to Mile 63.1.	Maintained by R.D. No. 537 Completed contract.
148	11	Do	Sacramento Weir.	Maintained by State.
152	11	Do	Fremont Weir.	Maintained by State.
153 156 157	11	Do	W. Levee Sacramento River Mile 87.6 to Mile 88.4; Mile 89.2 to Sycamore Slough	Maintained by R.D. No. 730 Completed contracts.
158	11	Do	W. Levee Sacramento River Mile 100.6 to Mile 101.4	Maintained by Sacramento River West Side Levee District. Completed contract.
160 161 162 163	11	Do	W. Levee Feather River except: 3.31 Mi. North from Nicolaus Bridge; 1400 ft. in Yuba City; from Sta.774+80 to Sta. 1188+00 of "Y.C.H.B" Traverse.	Maintained by Maintenance Area No. 3, Levee Dist. Nos. 1 & 9 of Sutter Co. Recl. Dist.No. 777 and State.
164	11	Do	E. Levee Sacramento River, Natomas Cut to Feather River	Maintained by Recl.Dist.No.1001.
165 166 167 168 169 170	11	Do	E. Levee Feather River from mouth to Mile 26.5,except from 2.37 miles of Nicolaus Bridge to Bear River	Maintained by R.D. Nos. 1001 and 784.

21

3

5

Accepted Items

No.	Date of Letter	Levee Location	Remarks
11 (171) (172)	8 Dec.1951	Marysville levees from W.P.R.R. at Simmerly Slough E.to Yuba River and from D St. Bridge on Yuba River upstream to Valley Meat Co.	Maintained by Marysville Levee Commission.
11 (173) (174)	Do	N.Levee Simmerly Slough from W.P.R.R. to S.P.R.R. and E. Levee Feather River from Simmerly Slough upstream 4.8 miles	Maintained by R.D. No. 10 Completed contract.
(175) 11	Do	N. Levee Yuba River from back levee of Marysville upstream 1.8 miles	Maintained by Marysville Levee Commission.
(176) 11	Do	S.Levee Yuba River from S.N.R.R. to S.P.R.R.	Maintained by R.D. No. 784.
(177) 11	Do	N.Levee Bear River from Feather River to W.P.R.R. Interceptor	Maintained by R.D. No. 784.
(178) 11	Do	E. Levee R.D.784 (W.Levee W.P.R.R.Interceptor) Bear River to intersection with W.P.R.R. in S½ Sec.17, T.14 N.,R. 4 E.	Maintained by R.D. No. 784.
11 (179) (180)	Do	S. Levee American River from 16th St.Bridge to Mayhew except from S.N.R.R. to a point 800 ft. E. of W.P.R.R.	Maintained by American River Flood Control District.
11 (181) (182) (183) (184) (185) (186) (187) (188)	Do	W. Levee Yolo By-pass from Sacramento River to Putah Creek except from N.line Cache Cr.Settling Basin to S.N.R.R. & from old Willow Slough pipes south 1.48 mi.*	Maintained by State and R. D. #2035.
(190) 11	Do	N.&S. levees Willow Slough Interceptor*	Maintained by State and R. D. No. 2035.
(191) (192) 11	Do	N.&S. levees of Putah Creek	Maintained by State.
11 (197) (198)	Do	N.&S. levees Sycamore Slough from Sacramento River to Knights Landing Outfall Gates	Maintained by R.D. 730 and Sacramento River West Side Levee District.

21

6

Accepted Items

No.	Date of Letter	Levee Location	Remarks
12	8 Dec.1951	Five reaches of Ryer Island levee along Miner Slough as follows: a. Junction Miner and Sutter Sloughs westerly 5000 feet. (38) b. From State Highway Bridge West. 3035 ft. (79A) Covered by letter dated 16 Nov. 1951 321 c. Spec. 1473, Sta. 53+00 to 64+00 about one mi. No. of Ryde Road. Mile 29.4 to 29.6 (53A) 303 Covered by letter dated 17 Nov. 1951 d. Spec. 1473, Sta. 0+00 to 12+00 being 600 ft. each side of Ryde Road. Mile 30.4 to 30.6 (54A) 304 e. Ryer Island cut-off levee beginning at east bank of Cache Slough and extending upstream 3,300 feet at junction of Cache and Miner Sloughs. (28) (50)	Maintained by R.D. No. 501. All are completed separate contracts.

*No waterway banks contiguous to these levees.

C. de ARRIETA

CERTIFIED MAIL
Return Receipt
Requested

Letter No. 12

(12)

SPKKA 824.3(Sac. Riv. F.C.P.)

8 DEC 1951

The Reclamation Board
State of California
1100 "O" Street
Sacramento 14, California

Gentlemen:

Reference is made to your letter of 22 June 1951 acknowledging that certain reaches of the levees of the Sacramento River Flood Control Project and the waterway bank contiguous to said levee reaches meet the requirements of the project as authorized prior to the Flood Control Act of 1944.

The levee reaches in question are located as follows:

140. a. Northerly levee of the American River from Jibboom Street Bridge to Sacramento River. 118.2 (?)

b. Easterly levee of the Sacramento River.

Reach 15 141. (1) American River to Natomas Cut. 60.25 to 79.0 124

Reach No. 11 142. (2) At Moulton Weir. (Man 2) 154

143. (3) Mile 158.5 (North End Moulton Weir) to Mile 164.4 (Princeton Ferry). (man 2) ? 134

Accepted by letter dated 9 March 1953 144 144. (4) Mile 168.5 to Mile 168.9 (at Butte City). (man 2) ? 138

c. Westerly levee of the Sacramento River.

145. (1) Mile 59.8 to Mile 60.75. 116

146. (2) Mile 61.8 to Mile 62.65 (at Bryte Bend) 116

62.65

Letter 12 Items 140 to 198

(12)

Letter No. 12

12

SPKKA 824.3(Sac.Riv.F.C.F.)
The Reclamation Board

c. Westerly levee of the Sacramento River. (cont'd)

147. (3) Mile 62.65 to Mile 63.1 (South End Sacramento Weir). 116

148. (4) At Sacramento Weir. 158

149. (5) Mile 63.5 (North End Sacramento Weir) to Mile 67.11. 122

150. (6) Mile 68.42 to Mile 70.9. 122

151. (7) Mile 76.5 to Mile 81.7 (East End Fremont Weir). 123

152. (8) Along Fremont Weir. 157

153. (9) Mile 84.0 (West End Fremont Weir) to Mile 85.3. 128

154. (10) Mile 85.5 to Mile 85.9. 128

155. (11) Mile 87.6 to Mile 88.4. 128

156. (12) Mile 89.2 to Mile 89.8 (Knights Landing Highway Bridge). 128

Reach No. 5

157. (13) Mile 89.8 (Knights Landing Highway Bridge) to Sycamore Slough. 89.9 128

Reach No. 4

158. (14) Mile 100.6 to Mile 101.4. 128

159. (15) Mile 110.9 to Mile 111.2. 128

d. Westerly levee of the Feather River.

Reach 39

160. (1). Sutter Bypass to Nicolaus Bridge. 143

161. (2) From a point 3.31 miles northerly from Nicolaus Bridge to the Fifth Street Bridge between Marysville and Yuba City. 143, 144

Reach 38

162. (3) From a point 1,400 feet northerly from the Fifth Street Bridge between Marysville and Yuba City to Station 774+80 "Y.C.H.B." Traverse. 144

163. (4) From a point east of Station 1188+00 "Y.C.H.B." Traverse to high ground just northerly from the Western Canal Headgate. 144

Reach 42

164. e. Easterly levee of the Sacramento River from Natomas Cut to Feather River. 141.1

12

Letter No. 12

(12)

f. Easterly levee of the Feather River.

Reach 42 165. (1) Sacramento River to a point 2.37 miles southerly from Nicolaus Bridge. 141 Pt 1

Reach 41

166. (2) Bear River to Mile 14.4.

167. (3) Mile 14.4 to Mile 14.7.

168. (4) Mile 14.7 to Mile 21.5.

169. (5) Mile 21.5 to Mile 22.75. 145

170. (6) Mile 22.75 to Mile 26.5 (Point where levee and S.N.R.R. meet). 145

g. Levees protecting the City of Marysville. All 147

Reach 43

171. (1) From the W.P.R.R. at Simmerly Slough easterly to the Yuba River.

172. (2) Along the Yuba River from the "D" Street Bridge to the back levee near the Valley Meat Company.

h. Levees protecting Reclamation District No. 10.

Reach No. 40

173. (1) Northerly levee of Simmerly Slough from the W.P.R.R. to the S.P.R.R. 151

174. (2) Easterly levee of the Feather River from Simmerly Slough to a point 4.8 miles northerly from Simmerly Slough. 151

Reach 46 175. i. Northerly levee of the Yuba River from the back levee of the City of Marysville to a point 1.8 miles easterly from said back levee. 147

Reach 47 176. j. Southerly levee of the Yuba River from Feather River (i.e. S.N.R.R.) easterly to the S.P.R.R. Main Line. 147

45 177. k. Northerly levee of Bear River from Feather River easterly to the W. P.R.R. Interceptor. 145

45 178. l. Westerly levee of the W.P.R.R. Interceptor and Clark Slough Interceptor (i.e. back levee of Reclamation District No. 784) from Bear River to the southerly end of the Clark Slough Interceptor.

145

(12)

Letter No. 12

12

SPKKA 824.3(Sac.Riv.P.C.P.)
The Reclamation Board

m. Southerly levee of the American River.

Reach No. 25 179. (1) Sixteenth Street Bridge to the S.N.R.R. 118.1

180. (2) From a point 800 feet easterly from the W.P.R.R. to Mayhew Station. 118.1

n. Westerly levee of the Yolo Bypass.

181. (1) Sacramento River to Knights Landing Ridge Cut. 127

182. (2) Knights Landing Ridge Cut to the northeast corner of the Cache Creek Settling Basin. 126

28 183. (3) S.N.R.R. Woodland Branch to a point 1.6 miles southerly from said railroad. 121

28 184. (4) From a point 1.6 miles southerly from the S.N.R.R. Woodland Branch to the Willow Slough Pipes. 121

28 185. (5) From a point 1.48 miles southerly from the Willow Slough Pipes to a point 1.9 miles southerly from said pipes. 121

28 186. (6) From a point 1.9 miles southerly from the Willow Slough Pipes to the Willow Slough Interceptor. 121

28 187. (7) From the Willow Slough Interceptor to Highway U.S. 40. 120

29 188. (8) From Highway U.S. 40 to Putah Creek. 119

27 189 o. Easterly and Westerly training levees of Cache Creek Settling Basin from Cache Creek southerly. 126

28 190 p. Northerly and Southerly levees of the Willow Slough Interceptor from the S.P.R.R. to the Yolo Bypass. 120

29 191 q. Northerly levee of Putah Creek from Yolo Bypass westerly to high ground. 119

192 r. Southerly levee of Putah Creek from high ground on Dixon Ridge westerly to high ground. 119

s. Southerly levee of Knights Landing Ridge Cut. 127

96 193 (1) From Yolo Bypass westerly 600 feet. Also covered under Unit 96-A

96 194 (2) From a point 2,500 feet westerly from Yolo Bypass to a point 2,900 feet westerly from Yolo Bypass. 127
Also covered under 96-A

12

Letter No. 12

(12)

SPKKA 624.3(Sac.Riv.F.C.P.)
The Reclamation Board

s. Southerly levee of Knights Landing Ridge Cut. (cont'd)

26 195 (3) From a point 3,300 feet westerly from Yolo Bypass to a point 7,100 feet westerly from Yolo Bypass. 127
Also covered under Unit No. 96-A

35 196 t. That portion of the back or westerly levee of Hastings Tract which runs east and west along the County Road for a distance of approximately one mile. 107

197 u. Northerly levee of Sycamore Slough from Sacramento River to Knights Landing Outfall Gates. 130

198 v. Southerly levee of Sycamore Slough from Sacramento River to Knights Landing Outfall Gates. 132

The records of this office show that your Board has accepted the levees and/or works covered by Items b.(1), b.(2), b.(3), c.(2), c.(4), c.(8), c.(11), c.(12), c.(14), d.(1), d.(3), d.(4), f.(3), f.(5), g., h., i., l., m., n.(1), n.(2), n.(3), n.(6), n.(7), n.(8), o., p., q., r. and s.(1) above, as complete. Accordingly the waterway bank contiguous to said Items is hereby transferred to the State of California for maintenance and operation.

The levee covered by Items a., b.(4), c.(1), c.(3), c.(5), c.(6), c.(7), c.(9), c.(10), c.(13), c.(15), d.(2), e., f.(1), f.(2), f.(4), f.(6), j., k., n.(4), n.(5), s.(2), s.(3), t., u. and v., above, although complete has not been formally transferred as contemplated by the Project documents. Accordingly the levee covered by said Items, together with the waterway bank contiguous thereto, is hereby transferred to the State of California for maintenance and operation.

The maintenance work required under the provisions of the Sacramento River Flood Control Project shall be performed in accordance with existing Flood Control Regulations which have been prescribed by the Secretary of the Army pursuant to Section 3 of the Act of Congress approved 22 June 1936, as amended and supplemented. As provided under paragraph 208.10(10) of these regulations, a maintenance manual covering these works is in process of preparation and will be furnished your Board upon completion.

A copy of this letter is being transmitted to the State Engineer.

FOR THE DISTRICT ENGINEER:

Sincerely yours,

H. R. Reifsnyder
Lt. Colonel, Corps of Engineers
Executive Officer

Copy Furnished:
Office, Chief of Engrs.
So.Pac.Div. Engr.
State Engineer
Engr. Div. (2)
C. de Arrieta

(12)

C. de ARRIETA

REGISTERED MAIL
Return Receipt
Requested

Letter No. 3

(3)

SPKKA 824.3(Sac.Riv. F.C.P.)

4 DEC 1951

Refer. Recl. Board letter dated 2 April 1952.

The Board accepted Item No. (9) on 18 Dec. 1951 with the condition that the Federal Gov. complete the enlargement of the levee with no obligation for the State to maintain the banks along the Sacramento Deep Water Channel.

The Board also accepted Items No. (10) and (11) on 18 Dec. 1951, without reservations other than an statement indicating that flatter slopes on this levees are not required.

Item No. 9 was previously accepted on 6 June 1951.

The Reclamation Board
State of California
1100 "O" Street
Sacramento 14, California

Mile 0 to 50
" 50 to 106

Gentlemen:

Reference is made to your letter of 18 May 1951 acknowledging that certain reaches of the levees of the Sacramento River Flood Control Project and the waterway bank contiguous to said levee reaches meet the requirements of the project as authorized prior to the Flood Control Act of 1944.

The levee reaches in question are located as follows:

Reach No. 32 (9) a. Easterly levee of the Yolo Bypass from Fremont Weir to Miner Slough. 127, 126, 121, 120, 119, 109, 107, 105 accepted 6-6-51

Reach No. 32 (10) b. Northerly levee of Sacramento Bypass. 122

Reach No. 33 (11) c. Southerly levee of Sacramento Bypass. 116

The records of this office show that on 6 June 1951 your Board accepted the levee covered by Item a. above as complete. Accordingly, the waterway bank contiguous to said Item a. is hereby transferred to the State of California for maintenance and operation.

The levee covered by Items b. and c. above although complete has not been formally transferred as contemplated by the Project documents. Accordingly, the levee covered by said Items b. and c., together with the waterway bank contiguous thereto, is hereby transferred to the State of California for maintenance and operation.

The maintenance work required under the provisions of the Sacramento River Flood Control Project shall be performed in accordance with existing

Reaches 32 and 33

Items 9 to 11

(3)

Letter No. 3

(3)

SPKEA 824.3(Sac.Riv.F.C.P.)
The Reclamation Board

Flood Control Regulations which have been prescribed by the Secretary of the Army pursuant to Section 3 of the Act of Congress approved 22 June 1936, as amended and supplemented. As provided under paragraph 208.10(10) of these regulations, a maintenance manual covering these works is in process of preparation and will be furnished your Board upon completion.

A copy of this letter is being transmitted to the State Engineer.

Sincerely yours,

C. C. Haug
Colonel, Corps of Engineers
District Engineer

Copy Furnished:
Office, Chief of Engrs.
So.Pac.Div. Engr.
State Engineer
Engr. Div. (2)
D. de Arrieta

(3)

C
O
P
Y

State Reclamation Board Letterhead

April 20, 1951

District Engineer
Sacramento District
U. S. Corps of Engineers
P. O. Box 1739

Dear Sir:

Reference your file PSKKO-P, December 12, 1950, transferring to the State the maintenance of the west levee of Yolo By-pass from the Causeway (Highway 40), southerly three miles, and the levees along both banks of Putah Creek from the west levee of Yolo By-pass upstream 9.4 miles.

Also reference same file number, letter of December 21, 1950, transferring to the State the clearing of the Putah Creek channel from approximately one mile above U. S. Highway 40 Bridge upstream to Winters.

Also reference your file PSKKO-P 824.3 (SAC. R.) 3 February 1951, in which referenced letter you answered certain problems which arose out of joint inspection of the Putah Creek Project and in which you stated that your office concurs in the contention that remedial action is necessary to prevent the scour that is occurring against the levee on the William Hamel property.

The Reclamation Board at its meeting April 18, 1951, ordered that the three sections of construction project outlined in the three referenced letters above, and to this office comprising the Putah Creek Project, be accepted by the State of California for maintenance and operation with the condition that the scour on the William Hamel property be remedied by the U. S. Engineers pursuant to the statement in your letter of 3 February 1951.

Yours very truly

THE RECLAMATION BOARD
A. M. BARTON
Chief Engineer and General Manager

By /s/
S. A. HONAKER
Assistant Secretary

SAH:emw

Exhibit F

(8) 1/2

PSKKB-F

31 October 1949

The Reclamation Board
State of California
1100 "O" Street
Sacramento, California

Gentlemen:

Construction of the West Levee of the Yolo Bypass from the causeway (Highway 40), southerly for a distance of approximately three miles, has been completed. Also construction of the levees along both banks of Putah Creek from the West Levee of Yolo Bypass upstream 9.4 miles has been completed. Therefore, in accordance with established procedure, these sections of completed levees are hereby transferred to the State of California for maintenance.

This construction forms an integral part of the Sacramento River Flood Control Project. The details and extent of the work are shown on the inclosed drawings.

There is also inclosed a copy of the Flood Control Regulations prescribed by the Secretary of War (now designated the Secretary of the Army), pursuant to the provisions of Section 3 of the Act of Congress approved 22 June 1936, as amended and supplemented, to govern the maintenance and operation of flood control works, of which the levees referred to are a part. In accordance with paragraph 208.10 (10) of said regulations, this office will furnish your Board and local interests at a later date with an operation and maintenance manual to assist in carrying out their obligations established by these regulations.

For the records of this office, acknowledgment of receipt of this letter is requested on or before 30 November 1949.

Copy of this letter, with inclosures, is being transmitted to the State Engineer.

FOR THE DISTRICT ENGINEER:

Sincerely yours,

3 Incls.
Drawing 50-4-2280(in 2 sheets)
" 50-4-2396(in 16 sheets)
Flood Control Regulations

W. R. McCUTCHEN
Lt. Col., Corps of Engineers
Executive Officer

Copy furnished:
State Engineer
Public Works Bldg.
Sacramento, Calif. (with Incls.)

Unit No. 8

119

187

See Ltr 31 Oct 1949 same Subj.

PSHKC-AA 19 November 1946

SUBJECT: Maintenance of West Levee, Yolo By-Pass, from Causeway three miles southerly.

The Reclamation Board
1100 "O" Street
Sacramento, California

Gentlemen:

Construction has been completed of the west levee of the Yolo By-Pass from the causeway (Highway 50) southerly for a distance of approximately three miles. Therefore, in accordance with established procedure, this portion of completed levee is hereby transferred to the State of California for maintenance.

This construction forms an integral part of the Sacramento River Flood Control Project. The details and extent of the work are shown on inclosed drawing No. 50-4-2280 in two sheets, entitled "Levee Construction, West Levee Yolo By-Pass, from Causeway Southerly 3.0 Miles."

There is also inclosed a copy of Flood Control Regulations prescribed by the Secretary of War pursuant to the provisions of Section 3 of the Act of Congress approved 22 June 1936, as amended and supplemented, to govern the maintenance and operation of flood control works, of which the levee referred to above is a part. In accordance with paragraph 208.10(10) of said regulations, at a later date this office will furnish your Board and local interests with an Operation and Maintenance Manual to assist in carrying out their obligation established by these regulations.

For the records of this office, acknowledgement of receipt of this letter is requested on or before 23 December 1946.

Copy of this letter, with inclosures, is being transmitted to the State Engineer.

Manual No. 8

2 Incls.
Dwg. No. 50-4-2280 (in 2 sheets)
Flood Control Regulations

Copy, with inclosures, furnished:
Mr. Edward Hyatt, State Engineer,
Sacramento, Calif.

cc: CdeA(w/d.)

Unit No. 8 119

EXHIBIT G

SUGGESTED SEMI-ANNUAL REPORT FORM

(1 May 19__)
(1 Nov 19__)

TO: The District Engineer
Sacramento District
Corps of Engineers
1209 - 8th Street
Sacramento, California

Dear Sir:

The semi annual report for the period (1 May 19__ to 31 October 19__) (1 November 19__ to 30 April 19__) on the Putah Creek channel and levees and the west levee of the Yolo Bypass, Unit No. 119 of the Sacramento River Flood Control Project, is as follows:

a. The physical condition of the protective works is indicated by the Inspector's Reports, copies of which are inclosed, and may be summarized as follows:

(Superintendent's summary of conditions)

It is our intention to perform the following maintenance work in order to repair or correct the conditions indicated:

(Outline the anticipated maintenance operations for the following 6 months.)

b. During this report period, major high water periods (water level at 25.0 on the recording gage 6 miles west of Winters) occurred on the following dates:

Dates	Maximum Elevation
_____	_____
_____	_____
_____	_____

Comments on the behavior of the protective works during such high water periods are as follows:

(Superintendent's log of flood observations)

During the high water stages when the water level reached a height of ____ on the gage or in excess thereof (dates) _____, it was necessary to organize and carry out flood operations as follows:

(See Maintenance Manual _____)

Exhibit G
Sheet 1 of 2

c. The inspections have indicated (no) or (the following) encroachments or trespasses upon the project right-of-way)

Action or prosecution for abatement of these encroachments or trespasses is summarized as follows: (or state none has been necessary).

d. (No) (_____) permits have been issued for (the following) improvements or construction within the project right-of-way.

Executed copies of the permit documents issued are transmitted for your files.

e. The status of maintenance measures, indicated in the previous semiannual report as being required or as suggested by the representatives of the District Engineer, is as follows:

(Statement of maintenance operations, item by item with percent completion)

f. The fiscal statement of the Superintendent's operations for the current report period is as follows:

	Labor	Material	Equipment	Overhead	Total
1. Inspection					
2. Maintenance					
3. Flood fighting operations					
TOTAL					

Respectfully submitted,

_____
Superintendent of Works

EXHIBIT H

PUTAH CREEK RATING CURVE

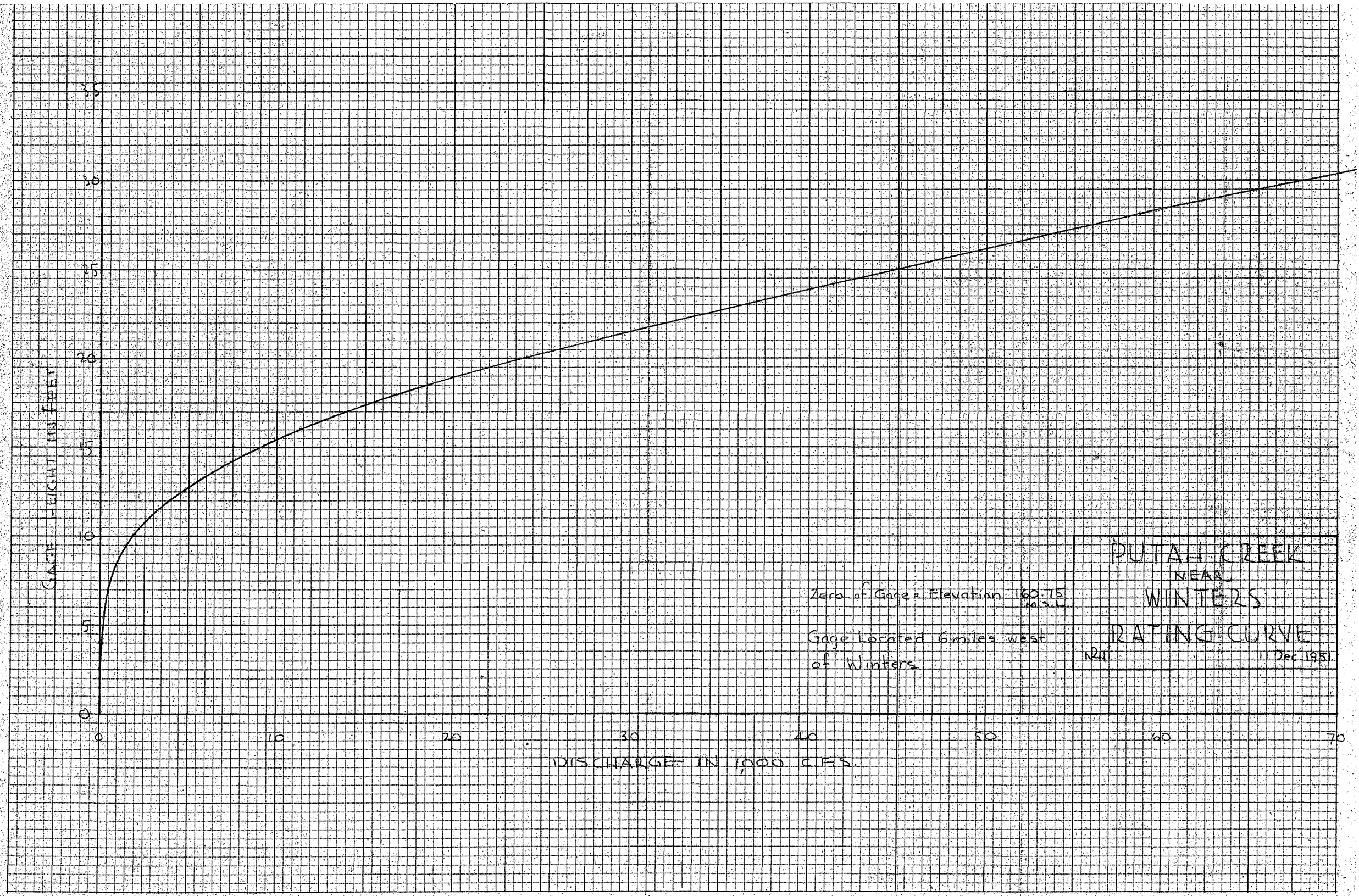
PUTAH CREEK
NEAR
WINTERS
RATING CURVE
N41
1 Dec 1951
Zero of Gage = Elevation 160.75 M.S.L.
Gage Located 6 miles west of Winters.
GAGE HEIGHT IN FEET
DISCHARGE IN 1,000 C.F.S.
0
5
10
15
20
25
30
35
0
10
20
30
40
50
60
70

EXHIBIT H

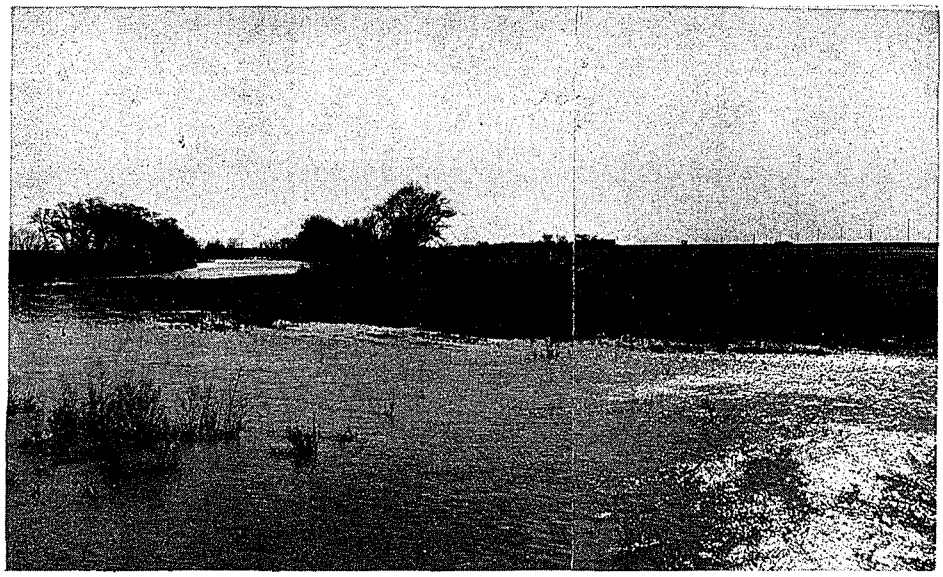

Channel
"n" = 0.050

Overbank
"n" = 0.040

PHOTO - EXISTING VEGETATION
(LOOKING DOWNSTREAM)

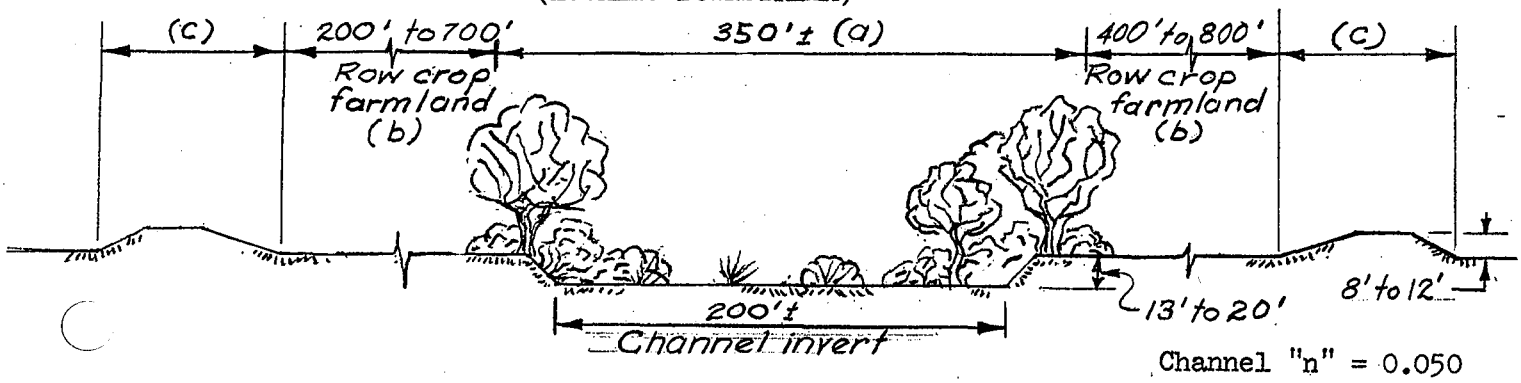

Channel "n" = 0.050
Overbank "n" = 0.040

TYPICAL SECTION - SEMI-CONTROLLED GROWTH
Not to scale

a. Existing channel invert to be cleared of large trees and willow clumps at about 5- to 10-year intervals. No clearing on channel slopes or 15 feet waterward from toe of channel.

b. The overbanks have been used for farming for a number of years, and this usage is expected to continue. No clearing will be required.

c. Levees to be cleared annually or as required to keep free of vegetal growth.

YOLO BYPASS TO 0.6 MILES DOWNSTREAM DAVIS ROAD (Centerline 320+00)

EXHIBIT I
Sheet 1 of 7

Channel
"n" = .030

Overbank
"n" = 0.040

PHOTO - EXISTING VEGETATION
(LOOKING DOWNSTREAM)

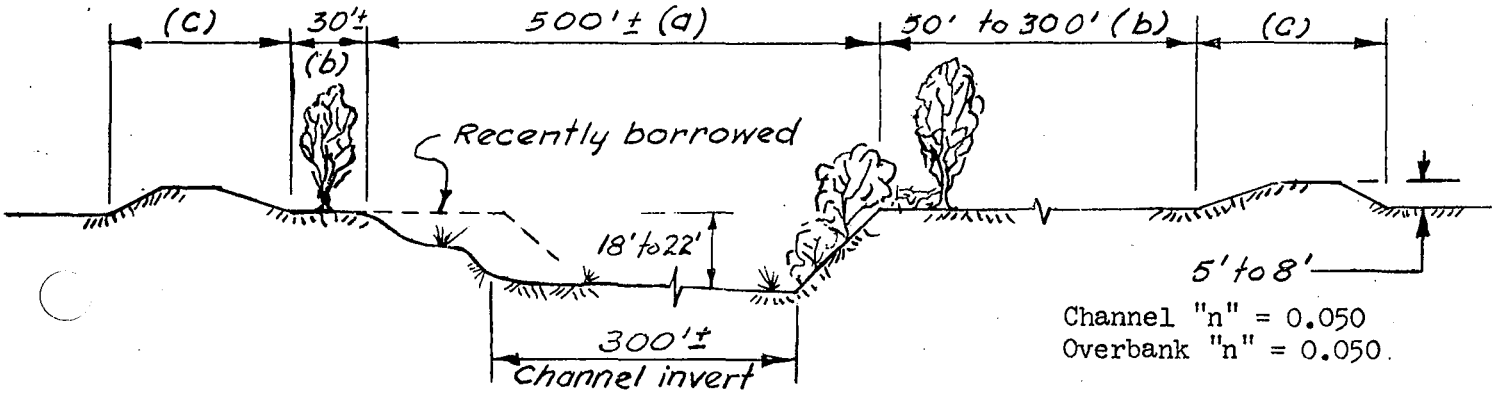

TYPICAL SECTION - SEMI-CONTROLLED GROWTH
Not to scale

a. Existing channel invert to be cleared of large trees and willow clumps at about 5- to 10-year intervals. No clearing on channel slopes or 15 feet waterward from toe of channel.

b. Some tree growth to be allowed on berms. Low limbs and underbrush to be removed.

c. Levees to be cleared annually or as required to keep free of vegetal growth.

0.6 MILES DOWNSTREAM FROM DAVIS ROAD TO I.S. 80 (Centerline 425+00)

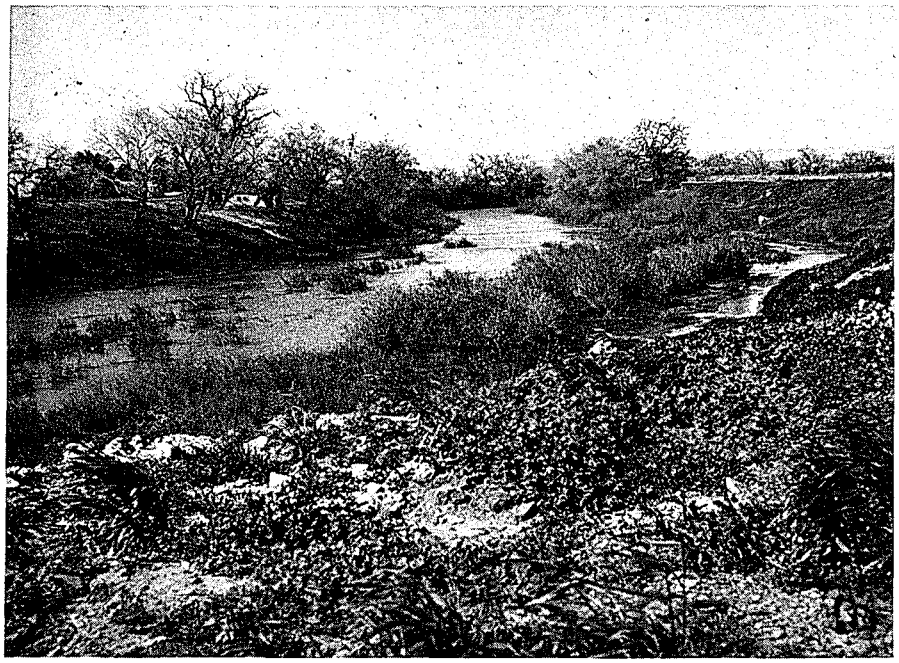

Channel
"n" = .045

Overbank
"n" = .055

PHOTO - EXISTING VEGETATION
(LOOKING UPSTREAM)

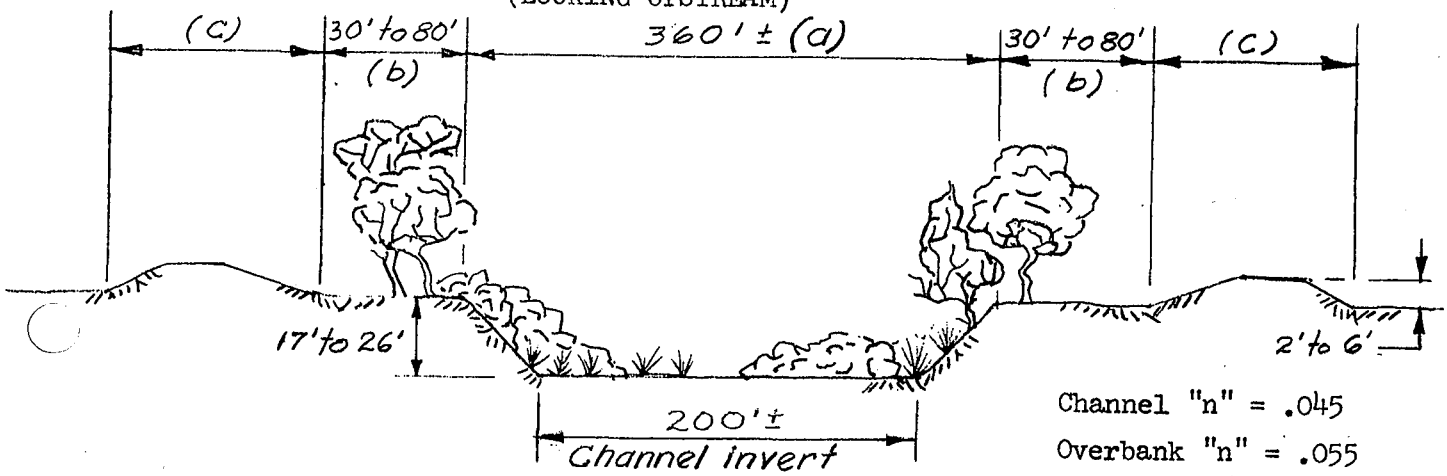

TYPICAL SECTION - SEMI-CONTROLLED GROWTH
Not to scale

a. Existing channel invert to be cleared of large trees and willow clumps at about 5- to 10-year intervals. No clearing on channel slopes or 15 feet waterward from toe of channel.

b. Some tree growth to be allowed on berms. Low limbs and underbrush to be removed.

c. Levees to be cleared annually or as required to keep free of vegetal growth.

I.S. 80 (Centerline 425+00) TO END OF PROJECT LEVEES (Centerline 465+00)

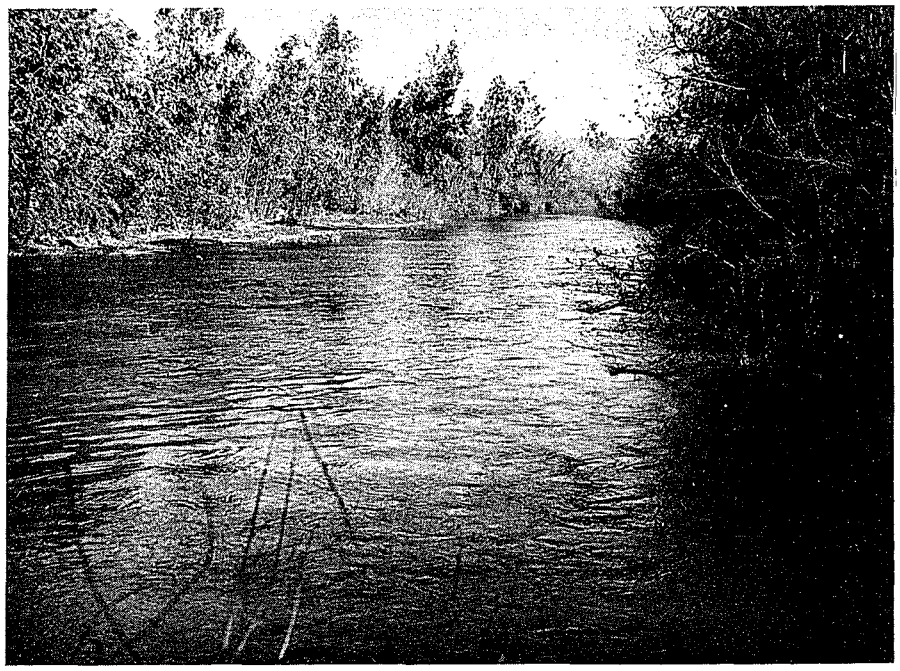

Channel
"n" = 0.050

No overbank

PHOTO - EXISTING VEGETATION
(LOOKING DOWNSTREAM)

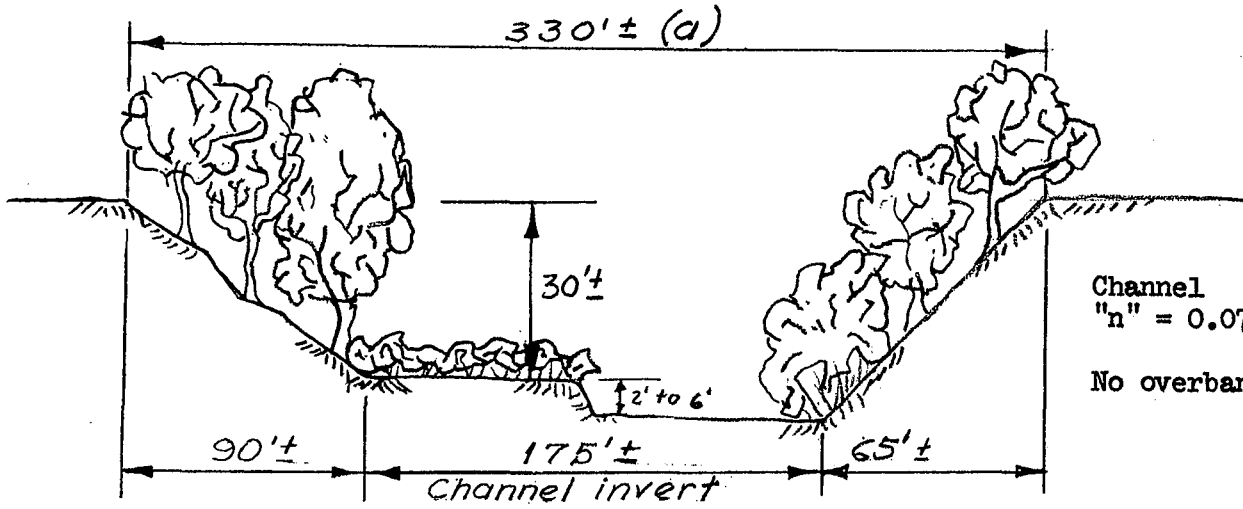

Channel
"n" = 0.070

No overbank

TYPICAL SECTION - SEMI-CONTROLLED GROWTH
Not to scale

a. Existing channel invert to be cleared of large trees and willow clumps at about 5- to 10-year intervals. No clearing on channel slopes or 15 feet waterward from toe of channel.

END OF PROJECT LEVEES (Centerline 465+00) TO STEVENS BRIDGE (Centerline 662+00)

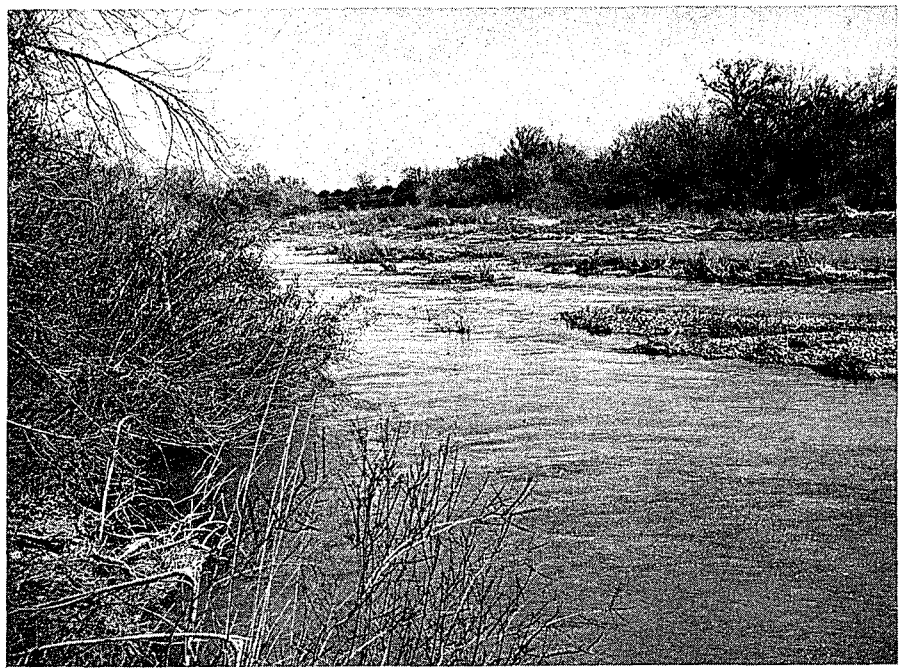

Channel
"n" = 0.050

Overbank
"n" = 0.060

PHOTO - EXISTING VEGETATION
(LOOKING DOWNSTREAM)

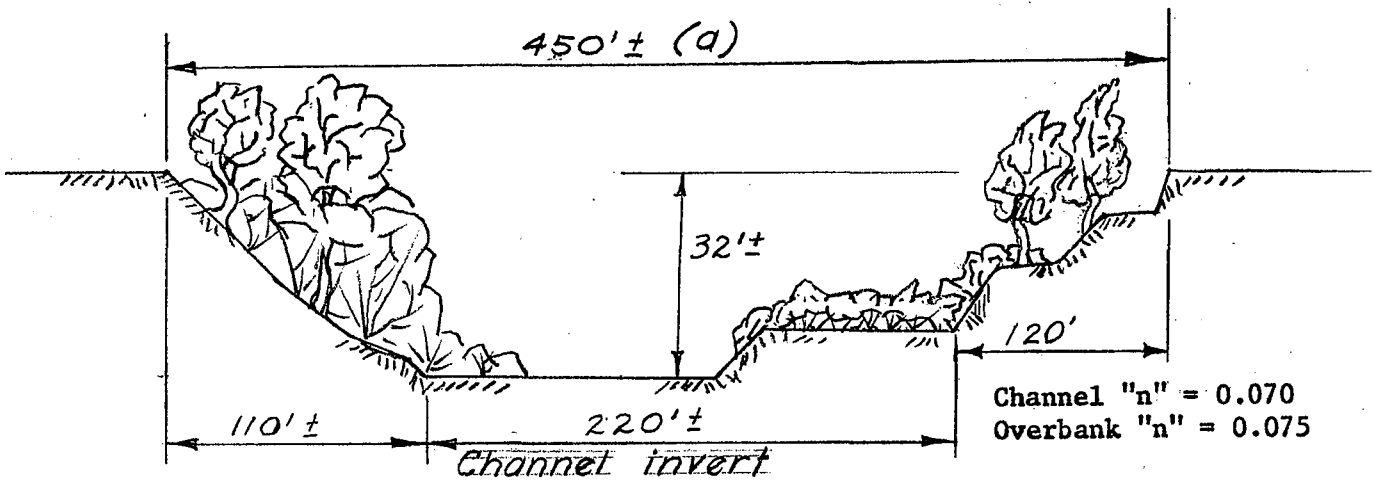

TYPICAL SECTION - SEMI-CONTROLLED GROWTH
Not to scale

a. Existing channel invert to be cleared of large trees and willow clumps at about 5- to 10-year intervals. No clearing on channel slopes or 15 feet waterward from toe of channel.

STEVENSON BRIDGE (Centerline 662+00) TO CENTERLINE 850+00

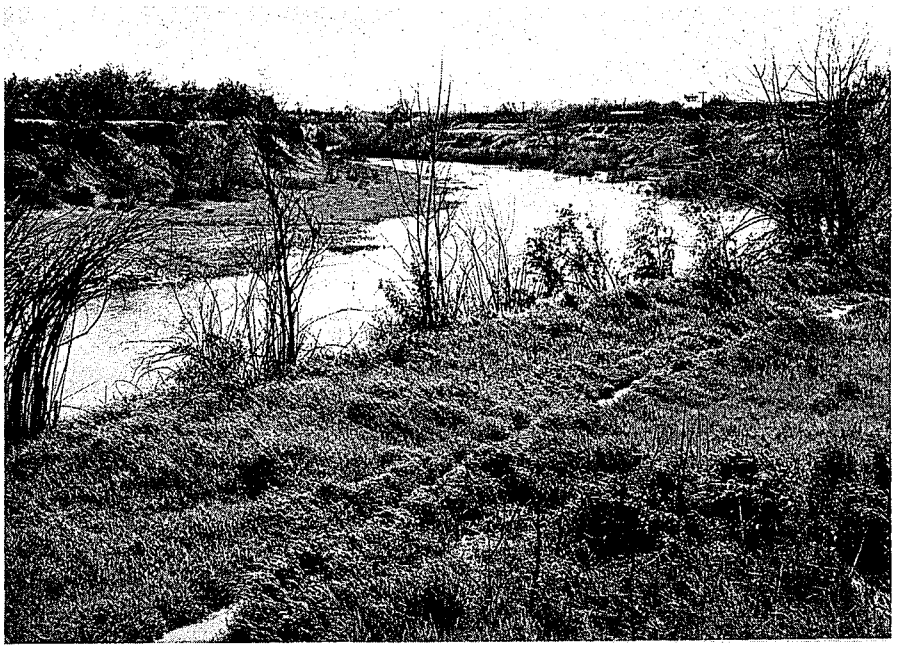

Channel
"n" = 0.045

No overbank

PHOTO - EXISTING VEGETATION
(LOOKING UPSTREAM)

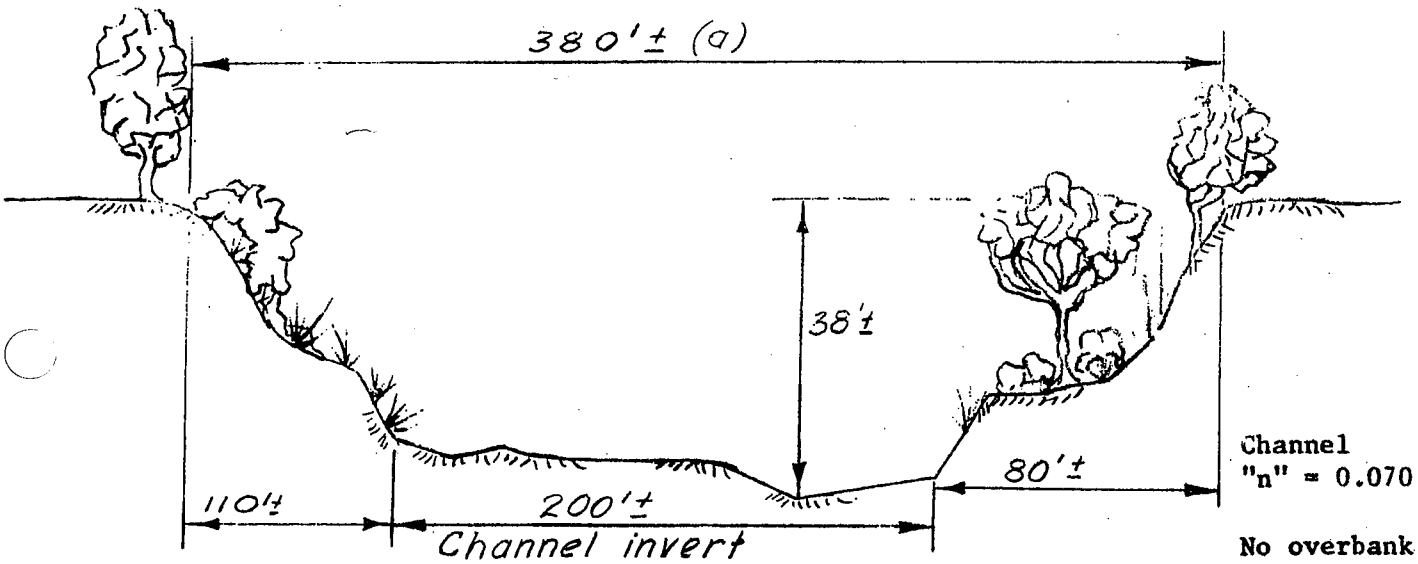

Channel
"n" = 0.070

No overbank

TYPICAL SECTION - SEMI-CONTROLLED GROWTH
Not to scale

a. Existing channel invert to be cleared of large trees and willow clumps at about 5- to 10-year intervals. No clearing on channel slopes or 15 feet waterward from toe of channel.

CENTERLINE 850+00 TO CENTERLINE 925+00

EXHIBIT I
Sheet 6 of 7

Channel
"n" = 0.040

Overbank
"n" = 0.050

PHOTO - EXISTING VEGETATION
(LOOKING DOWNSTREAM)

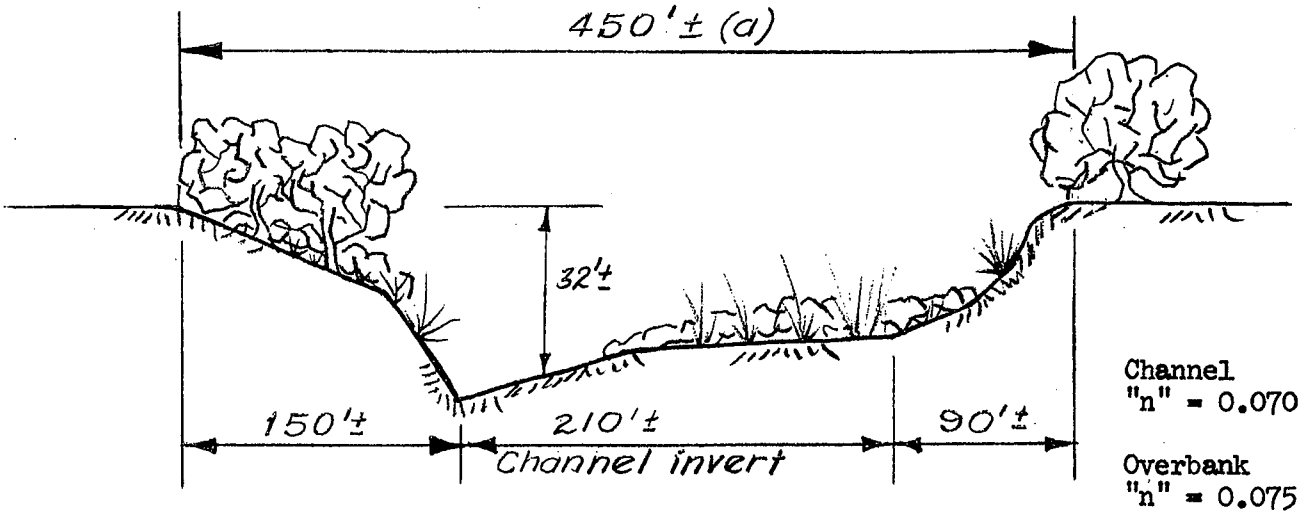

TYPICAL SECTION - SEMI-CONTROLLED GROWTH
Not to scale

a. Existing channel invert to be cleared of large trees and willow clumps at about 5- to 10-year intervals. No clearing on channel slopes or 15 feet waterward from toe of channel.

CENTERLINE 925+00 TO WINTERS (Centerline 1030+00)

SUPPLEMENT TO STANDARD
OPERATION AND MAINTENANCE MANUAL
SACRAMENTO RIVER FLOOD CONTROL PROJECT

UNIT NO. 119

PUTAH CREEK CHANNEL AND LEVEE
AND
WEST LEVEE YOLO BYPASS
FROM
YOLO CAUSEWAY DOWNSTREAM 3 MILES

REVISIONS OR ADDITIONS

REVISIONS		DATE
Sections I and II - - - - - - -	Revised Highway No. 40 designation to Interstate 80.	March 1975
*Paragraph 2-01c.-	Added note on semi-controlled vegetation growth.	March 1975

ADDITIONS		DATE
*Exhibit F - - - -	Added copy of letter indorsing revision dated 27 February 1975.	March 1975
*Exhibit I - - - -	Added typical sections of semi-controlled growth.	March 1975
*Exhibit J - - - -	Added aerial mosaics (detached)	March 1975

*These additions and revisions were authorized by SPD 5th Ind. to SPK Office Report "Sacramento River Flood Control Project, Design Flow for Putah Creek," dated 20 April 1973.

EXHIBITS (Cont'd)

E Check Lists - Levees, Channels and Structures - - - - - Sheets 1 thru 9

F Letter of Acceptance by State Reclamation Board - - - - 1 Sheet

G Semi-Annual Report Form - - - - - - - - - - - - - - - - - Sheets 1 and 2

H Putah Creek Rating Curve - - - - - - - - - - - - - - - - - 1 Sheet

*I Photos (1973) and Sections Indicating Semi-Controlled Growth - Sheets 1 thru 7

*J Aerial Mosaics (Detached) - - - - - - - - - - - - - - - - Sheets 1 thru 8

* (Added March 1975)

SUPPLEMENT TO STANDARD

OPERATION AND MAINTENANCE

MANUAL

SACRAMENTO RIVER FLOOD CONTROL PROJECT

UNIT NO. 119

PUTAH CREEK CHANNEL AND LEVEES

AND

WEST LEVEE YOLO BYPASS

FROM

YOLO CAUSEWAY DOWNSTREAM 3 MILES

DECEMBER 1952

HWY 90 SEE HWY MAPS

SECTION I

INTRODUCTION

1-01. Location. The improvement covered by this manual is that part of the Sacramento River Flood Control Project which includes the channel and levees of Putah Creek from the highway bridge at Winters, California, downstream to its mouth in the Yolo Bypass and the west levee of the Yolo Bypass from the Yolo Causeway southerly to Putah Creek. Putah Creek is one of the tributaries of the Yolo Bypass. The portion of the stream covered by this manual forms the boundary line between Yolo and Solano Counties and is in the general vicinity of the cities of Winters and Davis. The location of the completed unit of the Sacramento River Flood Control Project covered by this manual is shown on exhibit A-1 herewith.

REVISED FROM 62,000 SEE MAP

1-02. Protection Provided. The project works are designed to protect adjacent agricultural lands from a flood flow of 40,000 cubic-feet per * second in Putah Creek with the Yolo Bypass at flood stage. The west levee of the Yolo Bypass is designed to protect adjacent agricultural land from a flood flow of 480,000 cubic-feet per second in the Yolo Bypass within this unit. In Putah Creek the grade of the adopted flood plane varies from elevation 62.5 at a point 0.81 mile upstream from the bridge at Interstate 80 to elevation 27.10 at the Yolo Bypass. The levee grade * provides a minimum freeboard of 3 feet above the flood plane profile from a point 0.81 mile upstream from Interstate 80 (beginning of embankment) * downstream to the Liberty Island Road. From the Liberty Island Road to the Yolo Bypass the freeboard increases uniformly from 3 to 6 feet. In the Yolo Bypass within this unit, the adopted flood plane profile varies

*(Revised March 1975)

from elevation 28.80 at the Yolo Causeway to elevation 27.10 at the mouth of Putah Creek. The levee grade provides for a freeboard of 6 feet above the flood plane profile.

1.03. Project Works. The project works covered by this manual was completed in three sections and includes the following:

a. Section I. Clearing of the Putah Creek Channel from the highway bridge at Winters to a point one mile upstream from the bridge at Interstate 80. *

b. Section II. Clearing and improvement by excavation of the Putah Creek channel from a point 1 mile upstream from Interstate 80 downstream to the Yolo Bypass and the construction of levees to adopted grade and section on both banks of Putah Creek. *

c. Section III. Construction of the west levee of the Yolo Bypass from the Yolo Causeway southerly to the north levee of Putah Creek.

1-04. Construction Data. Unit No. 119 of the flood control works described in this manual forms an integral part of the Sacramento River Flood Control Project. The construction to bring this unit to project standards was completed in sections under the contracts described as follows:

a. Section I. Channel clearing work extending from the highway bridge at Winters to a point approximately 1 mile upstream from the bridge at Interstate 80, started on 17 April 1950, and completed on 12 October 1950. *

b. Section II. Channel improvement by excavation and levee construction along both banks of Putah Creek extending from a point approximately 1 mile upstream from the bridge at Interstate 80 to the Yolo Bypass, started on 2 September 1948, and completed on 10 November 1949. *

c. Section III. Levee construction along the westerly edge of the Yolo Bypass, started on 16 July 1946, and completed 28 October 1946.

Responsibility for operating and maintaining the completed works herein described was officially accepted by the Reclamation Board of the State of California on 20 April 1951, as shown on the attached letter of acceptance, exhibit F. The scour on the William Hamel property mentioned in the letter of acceptance was subsequently remedied by the Sacramento District to the satisfaction of the State Reclamation Board.

1-05. Contractor. The prime work was performed under the following contracts, record copies of which are on file with the Corps of Engineers, U.S. Army, Sacramento District, Sacramento, California.

*(Revised March 1975)

Section I. Channel clearing extending from the highway bridge at Winters to a point approximately 1 mile upstream from the bridge at Interstate 80, Contract No. DA04-167-Eng-1453, H. Earl Parker, * Inc., Contractors. Drawing 50-6-2581.

Section II. Channel improvement and levee construction extending along both banks of Putah Creek from a point approximately 1 mile upstream from the bridge at Interstate 80 to the Yolo Bypass, * Contract No. W-04-167-Eng-1453, H. Earl Parker, Inc., Contractors. Drawing 50-4-2396.

Section III. Levee construction along the westerly edge of the Yolo Bypass extending from the Yolo Causeway southerly 3 miles to the north levee of Putah Creek, Contract No. W-94-167-Eng-1191, A. Teichert and Son, Inc., Contractors. Drawing 50-4-2280.

1-06. Flood Flows. For purposes of this manual, the terms "flood" or "high water period" shall refer to flows when the water surface in Putah Creek reaches or exceeds the reading of 25.0 on the Putah Creek recording gage 6 miles west of Winters; it also applies to floods in the Yolo Bypass rising above the reading of 32.5 on the California Department of Water Resources and U.S. Geological Survey jointly operated gaging station just upstream from the Sacramento Northern Railroad bridge. A flowstage relationship at the Putah Creek recording station is shown on the rating curve in exhibit H.

1-07. Assurances Provided by Local Interests. Assurance of cooperation by local interests is provided by state legislation, as contained in Chapter 3, Part 2, Division 5 of the State Water Code. (See paragraph 2-02a of the Standard Manual.)

1-08. Superintendent. The name and address of the Superintendent appointed by local interests to be responsible for the continuous inspection, operation, and maintenance of the project works shall be furnished the District Engineer, and in case of any change of Superintendent, the District Engineer shall be so notified.

*(Revised March 1975)

SECTION II

FEATURES OF THE PROJECT SUBJECT TO FLOOD CONTROL REGULATIONS

2-01. Channels.

a. Description. The principle structures consist of:

(1) Cleared Channel. The channel of Putah Creek from the highway bridge at Winters to a point approximately one mile upstream from the bridge at Interstate 80 was cleared of trees and brush and in * some places the channel invert was rough graded to eliminate islands, humps or bars. In the reach between the highway bridge at Winters and the easterly limits of the town of Winters, a distance of approximately 0.5 miles, the clearing was limited to the removal of a few trees. The channel was left undisturbed because of the Winters Dam and the sewage filter bed, both of which are located in the channel within this reach.

(2) Improved Channel. The channels of Putah Creek from a point approximately one mile upstream from the bridge at Interstate 80 to the Yolo Bypass was cleared and improved by excavation as an incidental part of levee construction work described in paragraph 2-02a. The material excavated from the channel was used in the levee embankment.

b. Inspection.

(1) Pertinent Requirements of the Code of Federal Regulations. Flood Control Regulations, paragraph 208.10 (g) (1) are quoted in part as follows:

"(g) Channels and Floodways.....(1) Maintenance. Periodic inspections of improved channels and floodways shall be made by the Superintendent to be certain that:

(i) The channel or floodway is clear of debris, weeds, and wild growth; [See note at end of subparagraph (6), paragraph 2-01 c.] *

(ii) The channel or floodway is not being restricted by the depositing or waste materials, building or unauthorized structures or other encroachments;

(iii) The capacity of the channel or floodway is not being reduced by the formation of shoals;

(iv) Banks are not being damaged by rain or wave wash, and that no sloughing of banks has occurred;

*(Revised March 1975)

(v) Riprap sections and deflection dikes and walls are in good condition;

(vi) Approach and egress channels adjacent to the improved channel or floodway are sufficiently clear of obstructions and debris to permit proper functioning of the project works.

Such inspections shall be made prior to the beginning of the flood season and otherwise at intervals not to exceed 90 days. Immediate steps will be taken to remedy any adverse conditions disclosed by such inspections..."

(2) The purpose of the flood-flow channel inspection is to insure that conditions which affect the channel capacity will remain the same, as far as possible, as those considered in the design assumptions and that no new conditions develop that may affect the stability of the project structures. At each inspection required by paragraph 208.10 (b) (1) of the Flood Control regulations, particular attention will, therefore, be given the following:

(a) Location, extent and size of vegetal growth.

(b) Unauthorized operations within the flood-flow channel right-of-way, such as excavations, buildings, and other structures, levees, bank protection, or training dikes.

(c) Rubbish and industrial waste disposal.

(d) Changes in the channel bed such as aggradation or degradation, which would interfere with free-flow from side drainage structures or induce local meanders that would scour the banks.

(e) Operations of any nature upstream from the project that would affect flow conditions within the limits of the flood control project.

(f) Condition of project structure.

1. Channel walls:

a. Deviation from alignment and grade.

b. Development of cracks and spalls.

c. Mechanical injuries.

2. Fencing:

a. Injuries to posts, fencing or barbed wire.

b. Damage to galvanizing.

3. Earth fills:

a. Settlement.

b. Erosion of backslopes.

c. Excessive seepage or saturation area back of fills.

d. Condition of bank protection - concrete or stone blanket.

4. Right-of-way:

a. Presence of dumped refuse.

b. Encroachment or trespass.

(3) No excavation within the limits of the Putah Creek Channel will be permitted unless an excavation permit has been approved by the State Reclamation Board.

(4) If any work is done to improve flow conditions in Putah Creek above the project, it should be coordinated with the District Engineer to insure that proper provisions are made for channel alignment and capacity to conform to the existing project.

(5) The intent of these inspections is to disclose all conditions which in any way affect the stability of the structures and their functioning for the control of floods. Each inspection report should note and comment on any repair measures that have been taken since the last inspection. In making these inspections, the check sheets included as exhibit E shall be explicitly followed.

c. Maintenance.

(1) Pertinent Requirements of the Code of Federal Regulations. Flood Control Regulations, paragraph 208.10 (g) (1), are quoted in part as follows: ".....Immediate steps will be taken to remedy any adverse conditions disclosed by such inspection..."

(2) Shoaling or aggradation at the inlets or outlets of side drainage structures may render them inoperative. It is, therefore, imperative that all drains be kept open and unobstructed at all times.

(3) Dumped rock or other suitable types of protection should be placed at locations found by experience to be critical trouble points, with a view to stablizing the channel alignment and preserving the general uniformity of the bank lines.

(4) Sediment and debris plugs or other obstructions should be removed from the channel to prevent any tendency for the flows to be deflected within the channel. The heavy material likely to accumulate in the new channel at the mouths of tributaries should be removed to keep the channel clear.

(5) The channel and right-of-way shall be kept reasonably clear of debris, refuse matter, or industrial wastes.

(6) Vegetal growth in the channel which may obstruct flood flows shall be cut in advance of the flood season, and together with all debris, removed from the channel.

Note *

Since construction of Monticello Dam has substantially decreased the expected design flows in the channel, it has been concluded that certain vegetal growth will be allowed in the stream waterway to compensate for this reduction in flood flows. If flood flow experience indicates that the allowed vegetal growth is reducing the waterway to a degree that encroaches into the design levee and channel bank freeboard, such clearing will be performed to provide the necessary waterway to accomodate the project design flow. The allowable growth would be approximately as shown on Exhibit I in 7 sheets.

(7) All eroded concrete shall be repaired as soon as erosion approaches a depth of 4 inches. For this purpose, it is recommended that the repair be made by thoroughly cleaning the surface by sandblasting and building up the section with pneumatically placed Portland cement mortar. All evidence of settlement, uplift, or failure of concrete structures shall be referred to the State Engineer for analysis and remedial measures.

(8) All damage to fencing, whether resulting from accidental or willful injuries or from corrosion, shall be promptly repaired with new material in order to maintain satisfactory protection to the public.

(9) All subdrainage structures which have become cemented due to the evaporation of ground water or other causes, shall be thoroughly cleaned out and repacked with fresh gravel.

*(Revised March 1975)

d. Operation.

(1) Pertinent Requirements of the Code of Federal Regulations. Flood Control Regulations, paragraph 208.10 (g) (2), are quoted in part as follows:

> "(g) Channels and floodways. (2) Operation. Both banks of the channel shall be patrolled during periods of high water.... Appropriate measures shall be taken to prevent the formation of jams... of debris. Large objects which become lodged against the bank shall be removed. The improved channel or floodway shall be thoroughly inspected immediately following each major highwater period. As soon as practicable thereafter all snags and other debris shall be removed and all damage to.... walls, drainage outlets or other flood control structures repaired."

(2) It shall be the duty of the Superintendent to maintain a patrol of the project works during all periods of flow in excess of a reading of 25.0 on the recording gage at the station 6 miles west of Winters, as indicated in paragraph 1-06 of this manual. The Superintendent shall dispatch a message by the most suitable means to the District Engineer whenever the water surface in the channel reaches the gage reading of 25.0 feet. The Superintendent shall also cause readings to be taken at the gage at intervals of one to two hours during the period when the water surface is above the floodflow stage indicated above and record the time of the observations. One copy of the reading shall be forwarded to the District Engineer immediately following the flood, and a second copy transmitted as an inclosure to the semi-annual report in compliance with paragraph 3-03c of the standard manual.

2-02. Levees

a. Description. The levees described in this manual are located on both banks of Putah Creek and on the westerly edge of the Yolo Bypass. The north levee of Putah Creek begins at a point 0.81 mile upstream from the bridge at Interstate 80, 2 miles southwest of Davis, California, and extends downstream * to the west levee of the Yolo Bypass. The south levee of Putah Creek begins at a point 1.52 miles upstream from the bridge of Interstate 80 and extends down- * stream to the westerly edge of the Yolo Bypass, terminating at high ground above the flood plane profile. The west levee of the Yolo Bypass is located on the westerly edge of the Yolo Bypass and extends from the Yolo Causeway southerly 3 miles to the north levee of Putah Creek. All levees of this unit were built to adopted grade and section by new construction and provide a freeboard above the flood plane profile as indicated in paragraph 1-02 of this manual. The crown of the levee was surfaced with crushed rock 4 inches in depth and 12 feet in width, as indicated on Drawing No. 50-4-2396, sheets 2 and 4 (see Exhibit B). Required turnouts and road approaches were constructed. These items are shown in the drawings of Exhibit B. Structures affecting levee maintenance are listed in Exhibit E.

*(Revised March 1975)

b. Inspection.

(1) Pertinent Requirements of the Code of Federal Regulations. Flood Control Regulations, paragraph 208.10 (b) (1), are quoted in part as follows:

"(b) Levees - (1) Maintenance....Periodic inspection shall be made by the Superintendent.... to insure that:

(i) No unusual settlement, sloughing, or material loss of grade or levee cross section has taken place;

(ii) No caving has occurred on either the landside or the riverside of the levee which might affect the stability of the levee section;

(iii) No seepage, saturated areas, or sand boils are occurring;

(iv) Toe drainage systems and pressure relief wells are in good working condition, and that such facilities are not becoming clogged;

(v) Drains through the levees and gates on said drains are in good working condition;

(vi) No revetment work or riprap has been displaced, washed out, or removed;

(vii) No action is being taken, such as burning grass and weeds, during inappropriate seasons, which will retard or destroy the growth of sod; (see Note (a) at end of subparagraph (1).

(viii) Access roads to and on the levee are being properly maintained;

(ix) Cattle guards and gates are in good condition;

(x) Crown of levee is shaped so as to drain readily, and roadway thereon, if any, is well shaped and maintained;

(xi) There is no unauthorized grazing or vehicular traffic on the levees;

(xii) Encroachments are not being made on the levee right-of-way which might endanger the structure or hinder its proper and efficient functioning during time of emergency.

STATE RECLAMATION BOARD

February 27, 1975

C
O
P
Y

C
O
P
Y

District Engineer
Sacramento District
U. S. Army Corps of Engineers
650 Capitol Mall
Sacramento, CA 95814

Dear Sir:

Your letter of November 18, 1974 transmitted a draft of the proposed revision to the Operation and Maintenance Manual, "Putah Creek Channel and Levees and West Levee of Yolo Bypass from Yolo Causeway Downstream 3 Miles - Unit No. 119" for review and comments.

The draft revision has been reviewed by the Central District and the legal staff of the Department of Water Resources and has been found to be satisfactory. The Reclamation Board therefore concurs with the conclusions by the Corps of Engineers as reflected in the subject draft revision.

Sincerely,

/s/A. E. McCollam
A. E. McCOLLAM
Chief Engineer and
General Manager

EXHIBIT F

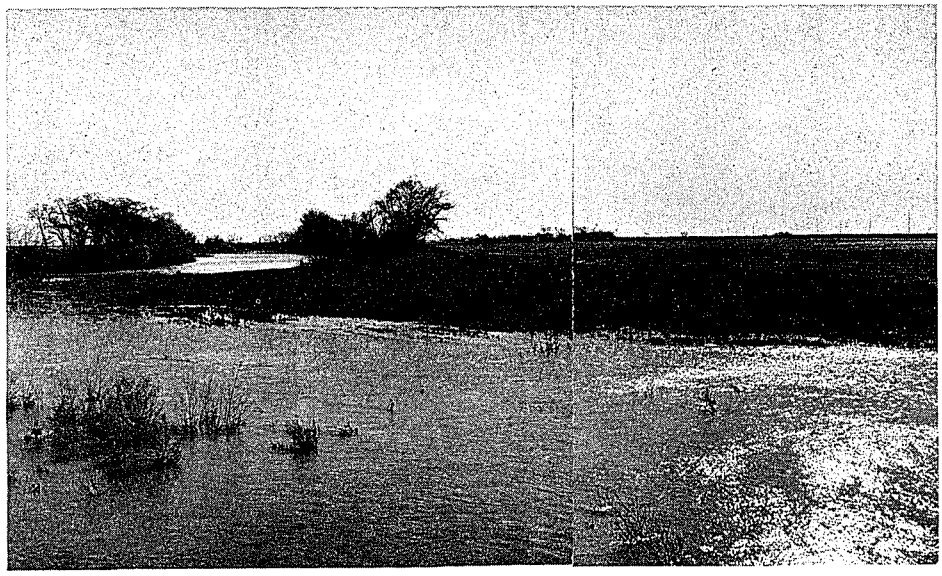

Channel
"n" = 0.050

Overbank
"n" = 0.040

PHOTO - EXISTING VEGETATION
(LOOKING DOWNSTREAM)

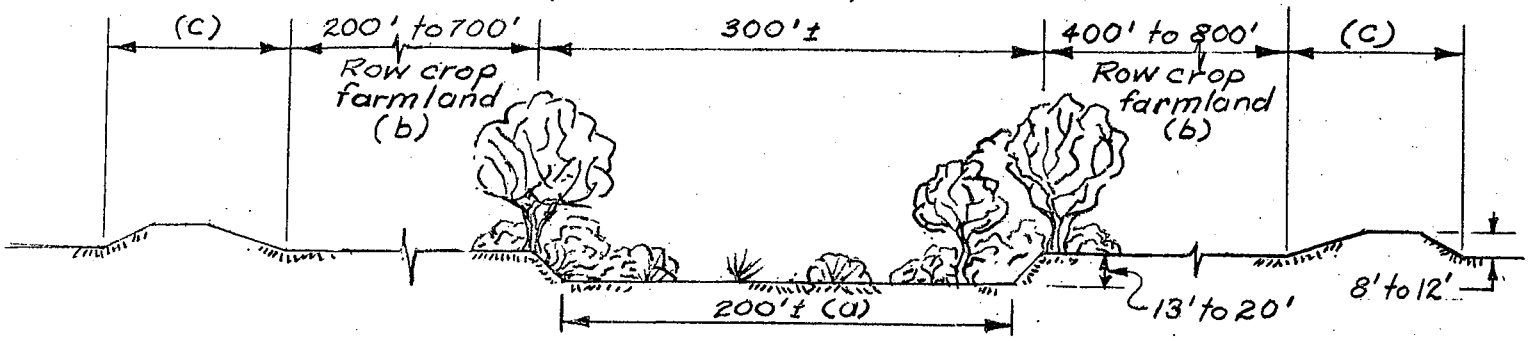

Channel "n" = 0.050
Overbank "n" = 0.040

TYPICAL SECTION - SEMI-CONTROLLED GROWTH
Not to scale

a. Existing channel invert to be cleared of large trees and willow clumps at about 5- to 10-year intervals. No clearing on channel slopes or 15 feet waterward from toe of channel.

b. The overbanks have been used for farming for a number of years, and this usage is expected to continue. No clearing will be required.

c. Levees to be cleared annually or as required to keep free of vegetal growth.

YOLO BYPASS TO 0.6 MILES DOWNSTREAM DAVIS ROAD (Centerline 320+00)

EXHIBIT C
Sheet 1 of 7

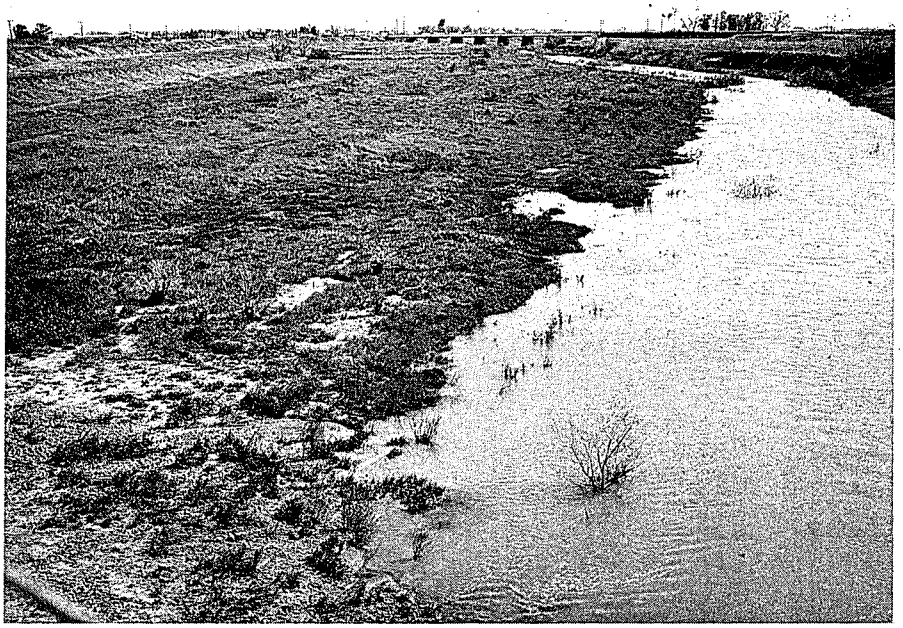

Channel
"n" = .030

Overbank
"n" = 0.040

PHOTO - EXISTING VEGETATION
(LOOKING DOWNSTREAM)

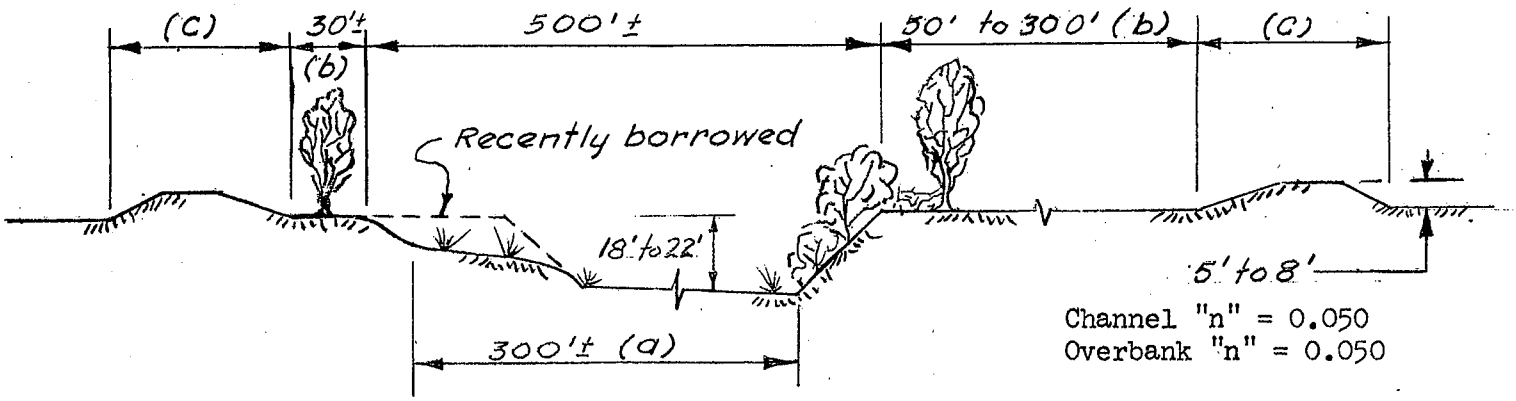

TYPICAL SECTION - SEMI-CONTROLLED GROWTH
Not to scale

a. Same as (a) on sheet 1 of 7.

b. Some tree growth to be allowed on berms. Low limbs and underbrush to be removed.

c. Same as note (c) on sheet 1 of 7

0.6 MILES DOWNSTREAM FROM DAVIS ROAD TO I.S. 80 (Centerline 425+00)

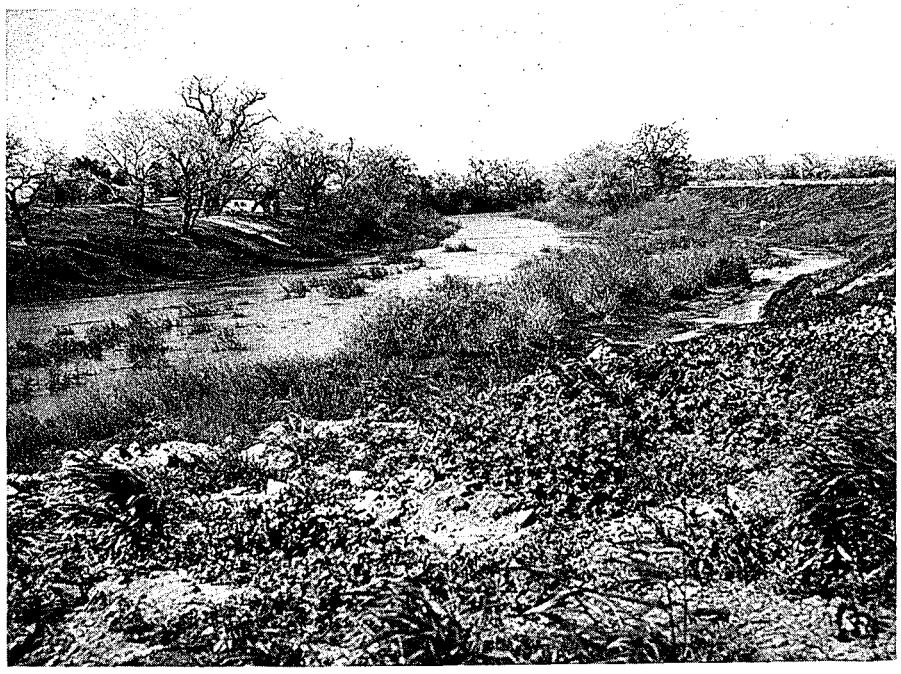

Channel
"n" = .045

Overbank
"n" = .055

PHOTO - EXISTING VEGETATION
(LOOKING UPSTREAM)

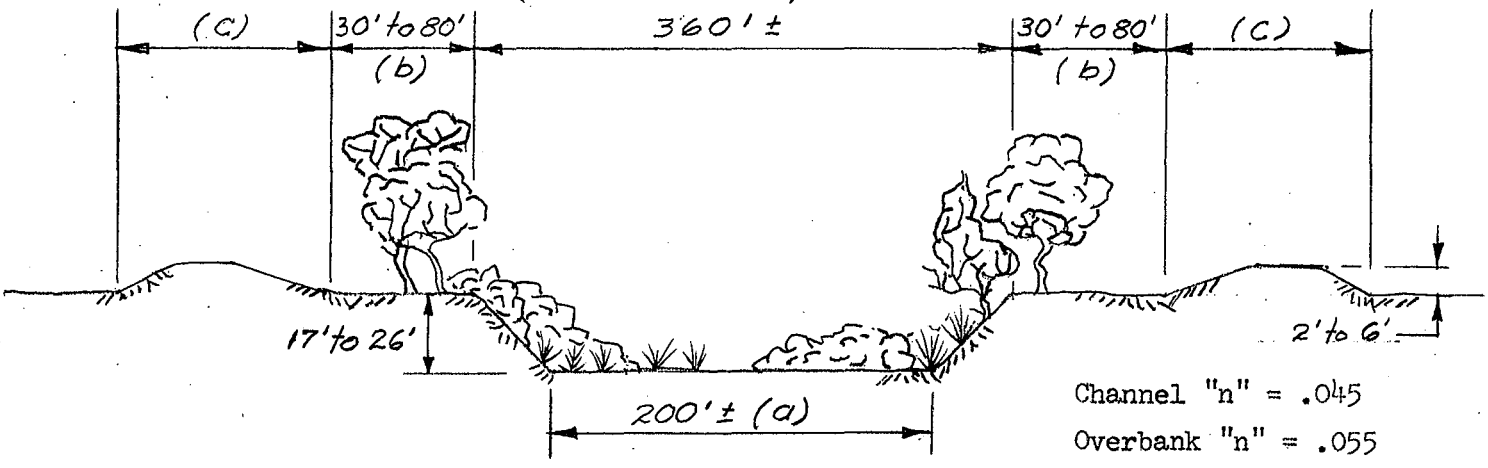

TYPICAL SECTION - SEMI-CONTROLLED GROWTH
Not to scale

a. Same as note (a) on sheet 1 of 7

b. Same as note (b) on sheet 2 of 7

c. Same as note (c) on sheet 1 of 7

I.S. 80 (Centerline 425+00) TO END OF PROJECT LEVEES (Centerline 465+00)

Channel
"n" = 0.050

No overbank

PHOTO - EXISTING VEGETATION
(LOOKING DOWNSTREAM)

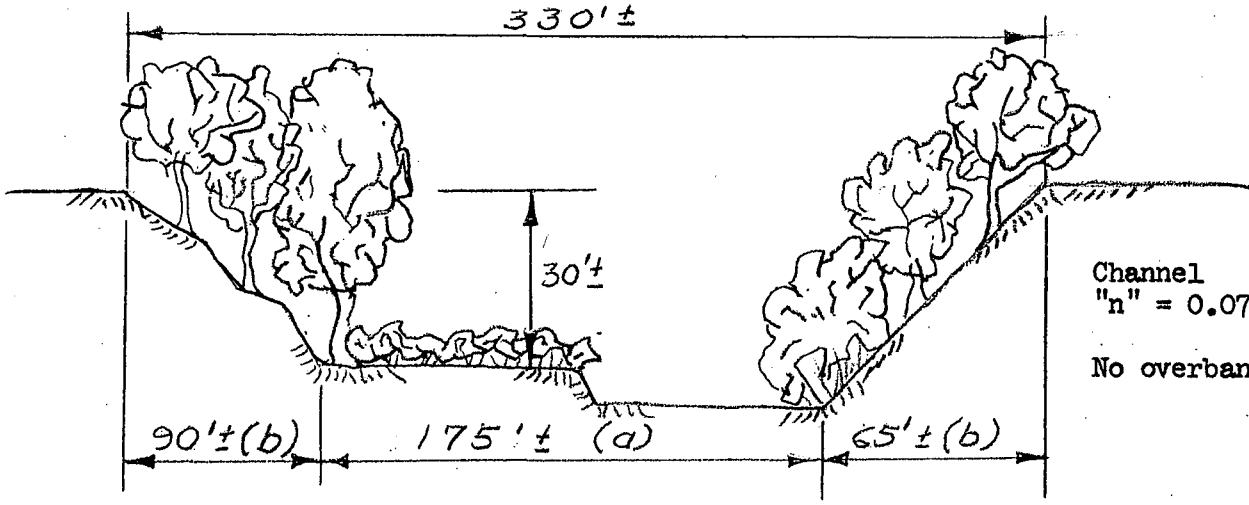

Channel
"n" = 0.070

No overbank

TYPICAL SECTION - SEMI-CONTROLLED GROWTH
Not to scale

a. Same as note (a) sheet 1 of 7

b. No clearing to be accomplished on channel slopes or 15 feet waterward from the toe of the channel slope.

END OF PROJECT LEVEES (Centerline 465+00) TO STEVENS BRIDGE (Centerline 662+00)

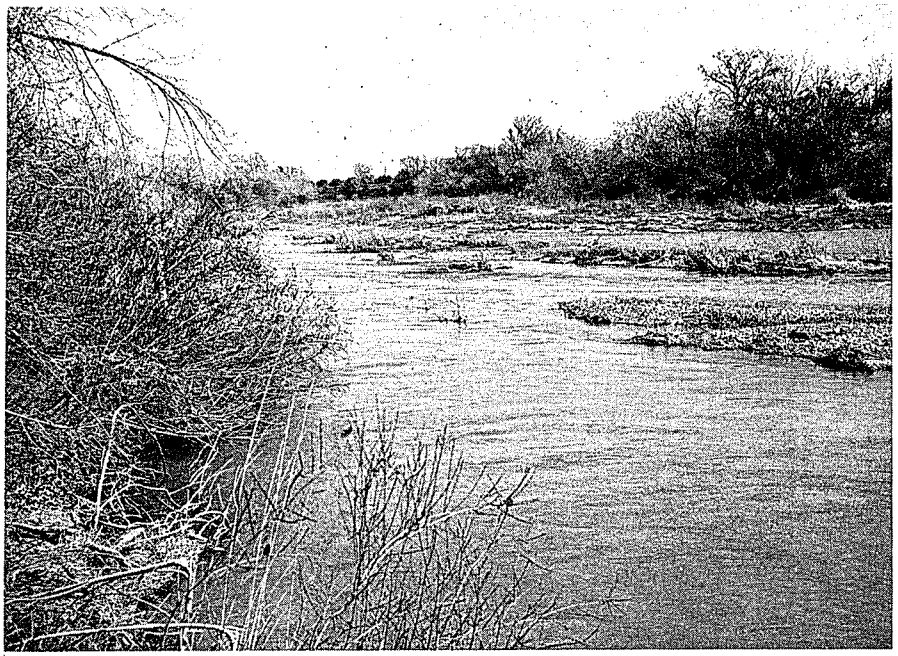

Channel
"n" = 0.050

Overbank
"n" = 0.060

PHOTO - EXISTING VEGETATION
(LOOKING DOWNSTREAM)

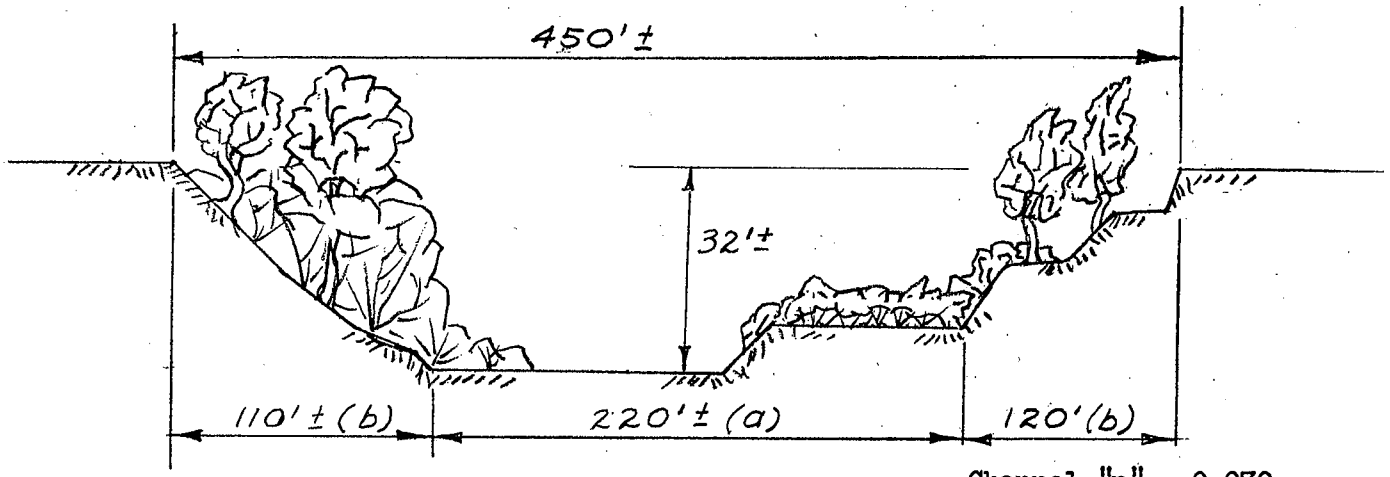

Channel "n" = 0.070

Overbank "n" = 0.075

TYPICAL SECTION - SEMI-CONTROLLED GROWTH
Not to scale

a. Same as note (a) on sheet 1 of 7.

b. Same as note (b) on sheet 4 of 7.

STEVENSON BRIDGE (Centerline 662+00) TO CENTERLINE 850+00.

EXHIBIT C
Sheet 5 of 7

Channel
"n" = 0.45

No overbank

PHOTO - EXISTING VEGETATION
(LOOKING UPSTREAM)

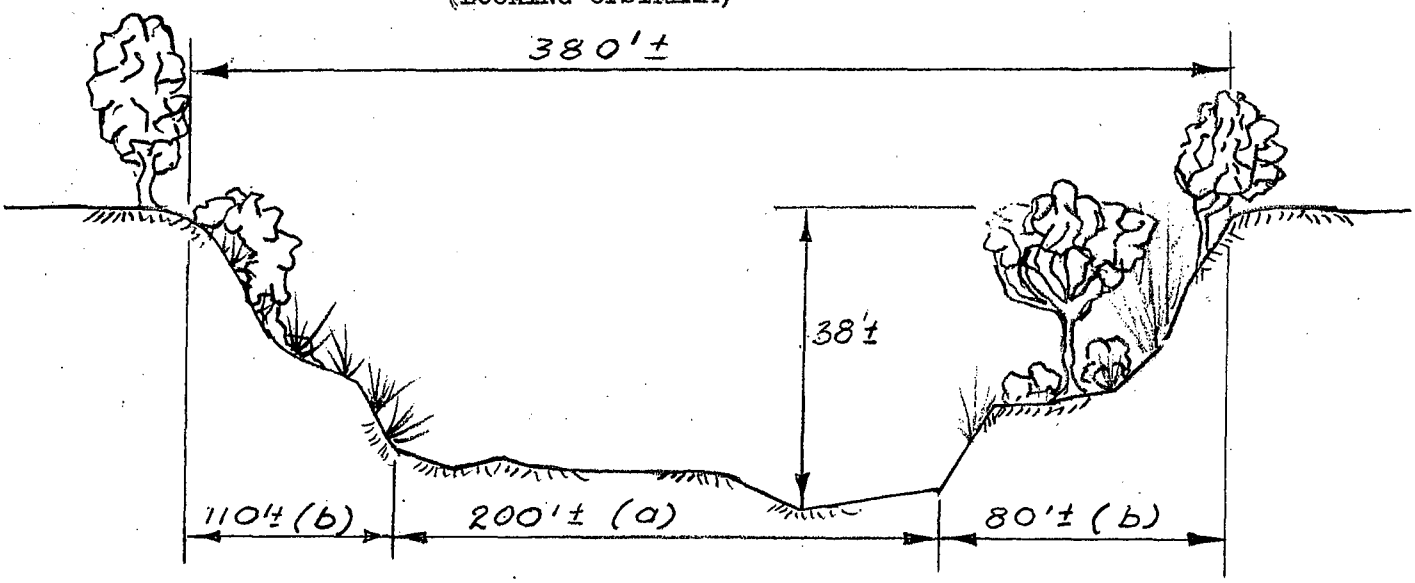

Channel "n" = 0.070

No overbank

TYPICAL SECTION - SEMI-CONTROLLED GROWTH
Not to scale

a. Same as note (a) sheet 1 of 7.

b. Same as note (b) sheet 4 of 7.

CENTERLINE 850+00 to CENTERLINE 925+00

Channel
"n" = 0.040

Overbank
"n" = 0.050

PHOTO - EXISTING VEGETATION

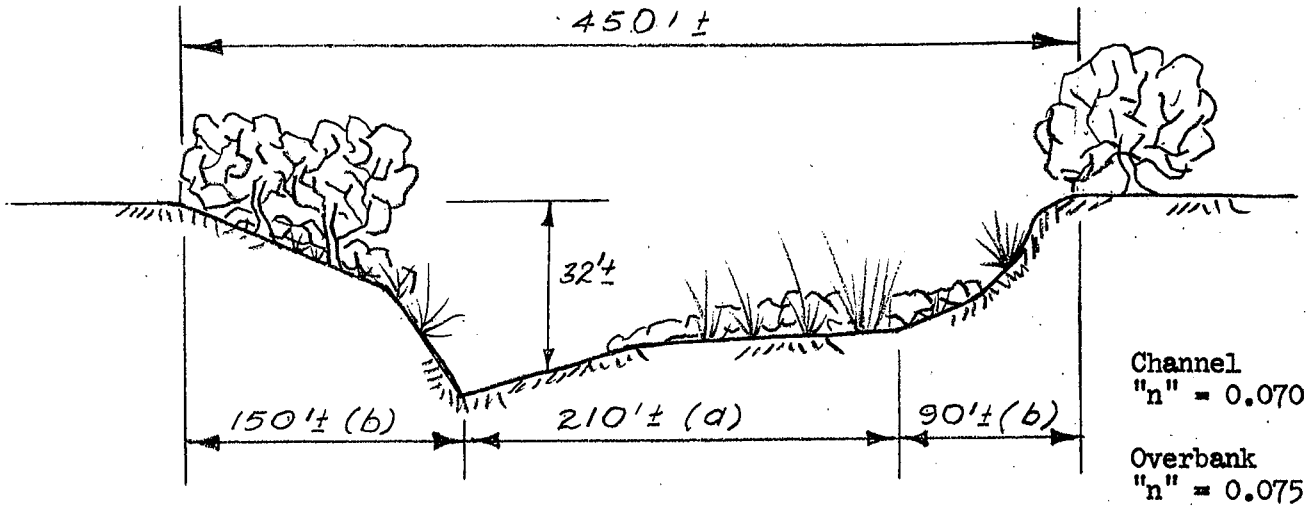

Channel
"n" = 0.070

Overbank
"n" = 0.075

TYPICAL SECTION - SEMI-CONTROLLED GROWTH
Not to scale

a. Same as note (a) sheet 1 of 7.

b. Same as note (b) sheet 4 of 7.

CENTERLINE 925+00 TO WINTERS (Centerline 1030+00)

OPERATION & MAINTENANCE MANUAL

For

SOUTH FORK PUTAH CREEK PRESERVE RESTORATION SECTION 1135 AUTHORIZATION

March 2006

SACRAMENTO DISTRICT
U.S. ARMY CORPS OF ENGINEERS
SACRAMENTO, CALIFORNIA

TABLE OF CONTENTS

EXHIBITS ii

SECTION I - INTRODUCTION 1
- 1-01 Authority 1
- 1-02 Definitions 1
- 1-03 Location and Description 1
- 1-04 Construction Data and Contractor Information 2

SECTION II - LOCAL COOPERATION 3
- 2-01 Federal Responsibilities 3
- 2-02 Non - Federal Responsibilities 3

SECTION III - GENERAL 4
- 3-01 General Rules and Procedures 4
- 3-02 Annual Report 4
- 3-03 Safety Requirements 5
- 3-04 Inspections 5
- 3-05 Checklists 5

SECTION – IV MAINTENANCE OF THE RESTORED SITE 6
- 4-01 Introduction 6
- 4-02 General 6
- 4-03 Vegetation Maintenance 6
- 4-04 Debris 8
- 4-05 Signs, Fences, Gates & other Misc. Items 8
- 4-06 Grazing 8
- 4-07 Damage Repair 9
- 4-08 Unacceptable Site Uses 10

REFERENCES 11

APPENDIX (Includes Exhibits A through I)

EXHIBITS

Exhibit	Description	Location
A	Vicinity Map –South Fork Putah Creek Restoration	Appendix
B	"As Constructed" Drawings – South Fork Putah Creek Restoration	Appendix
C	Elderberry Location Map, South Fork Putah Creek Restoration	Appendix
[redacted]		
E	Vegetation on Mitigation Sites Inspection Checklist	Appendix
F	United States Department of the Interior, Fish and Wildlife Service, Conservation Guidelines for the Valley Elderberry Longhorn Beetle, 9 July 1999.	Appendix
G	Pest Ratings of Noxious Weed Species & Noxious Weed Seed	Appendix
H	Fire and Logistics Plan	Appendix
I	Letter of Transfer to or Acceptance by the Reclamation Board South Fork Putah Creek Preserve	Unattached
[redacted]		

SECTION I

INTRODUCTION

1-01 AUTHORITY

The South Fork Putah Creek Restoration (SFPCR) project was authorized by Section 1135(b) of the Water Resources Development Act of 1986 (Public Law 99-662/33 U.S.C. 2294) and Section 344(a) (3) of the Water Resources Development Act of 1992 (Public Law 102-580). Section 1135(b) authorizes the Corps of Engineers (Corps) to plan and construct modifications to previously constructed projects for improving the quality of the environment in the public interest. The modifications can be to the structures and/or operations of completed water resource projects. Section 1135 authorization also includes areas adjacent to features of the completed project if the project likely contributed to developments which displaced historic wetlands and wildlife habitats. These plans and specifications are based upon the approved Putah Creek South Fork Preserve Project Modification Report of July 1996, revised April 1997.

1-02 DEFINITIONS

a. District Engineer: District Engineer for the United States Army Corps of Engineers (USACE), Sacramento District.

b. Non-Federal Sponsor: The City of Davis as defined in the Project Cooperative Agreement.

c. Project Cooperation Agreement (PCA): The agreement between the U.S. Army Corps of Engineers and the State of California Reclamation Board that defines the responsibilities of each agency in regards to these mitigation sites.

d. Plant establishment: Sustained self-sufficiency where the plant is able to sustain growth without supplemental watering, fertilizing, herbicide spraying, weeding, pruning or cultivation.

e. Concerned Agencies: U.S. Fish & Wildlife Service, U.S. Army Corps of Engineers, State of California Department of Water Resources, Reclamation District 900, West Sacramento Joint Powers Authority.

1-03 LOCATION AND DESCRIPTION

The SFPCR project site is 84 acres and lies adjacent to the south bank of the South Fork Putah Creek and north of the levee (see Exhibit A). The project site consists of a lower vegetated riparian bench area and upper terrace area, which was being leased out for agriculture production and farming operations, which ceased in 1999 (See Exhibit B). The project limits are:

North: South Fork Putah Creek right bank.
South: 10 feet from toe of levee slope.
West: Gravel shoulder of Mace Blvd.
East: Existing fence and berm.

1-04 CONSTRUCTION DATA AND CONTRACTOR INFORMATION

Contractor for the South Fork Putah Creek Restoration Site:
Contractor: Bitterroot Restoration
Contract #: DACW05-99-B-0035
Awarded: September 1999
Contract Completed: April 2003

SECTION II

LOCAL COOPERATION

2-01 FEDERAL RESPONSIBILITIES

Federal responsibility shall include the following during feasibility and construction:

a. Prepare the appropriate environmental documentation (Environmental Assessment or Environmental Impact Statement/Environmental Impact Report), when requested by, and in cooperation with, the Non-Federal Sponsor. Coordinate with U.S. Fish & Wildlife Service and National Oceanic and Atmospheric Administration Fisheries (formerly known as the National Marine Fisheries Service) and determine mitigation requirements in consultation with these agencies using Habitat Evaluation Procedures or other methodology.

b. Prepare wildlife habitat mitigation or restoration designs, oversee their implementation, maintain plants, and ensure that the plantings are self-sustaining prior to turnover to the Non-Federal Sponsor.

c. Document with still or video photography the conditions of the site at the time of turnover to the Non-Federal Sponsor.

d. In joint responsibility with Non-Federal Sponsor, ensure that environmental commitments measures are successfully implemented in accordance with National Environmental Policy Act (NEPA), Federal Endangered Species Act (ESA) and the California Environmental Quality Act (CEQA).

e. Provide As-Constructed drawings.

f. Prepare the site Operations & Maintenance Manual.

2-02 NON-FEDERAL RESPONSIBILITIES

The operation and maintenance of mitigation site is a Non-Federal Sponsor responsibility. This responsibility is passed on by the U. S. Army Corps of Engineers as described in the Project Cooperation Agreement (see Exhibit D). Non-Federal operation and maintenance responsibilities for the project mitigation sites are described in detail in Section IV and shall include the following:

a. Throughout the life of the project, protect and preserve desirable vegetation on site, including desirable "volunteers." Allow desirable vegetation to grow to maturity on mitigation sites while allowing for natural succession.

b. Operate, maintain, repair, replace, and rehabilitate all onsite related physical features required to protect and preserve the mitigation sites as stated in Section IV.

c. Make regular inspections, document and submit annual reports (see Section 3-02).

d. Obtain required permits from local, state, and Federal authorities to conduct operation and maintenance activities otherwise not currently permitted.

SECTION III

GENERAL

3-01 GENERAL RULES AND PROCEDURES

The general rules for maintenance and operation of the mitigation sites are as follows:

a. The Non-Federal Sponsor will maintain and operate the mitigation or restoration sites in accordance with regulations prescribed by the Secretary of Army as required by law, and shall be responsible for, and directly in charge of, any organization responsible for the efficient operation and maintenance associated with the mitigation sites, with appropriate cost allocation.

b. No encroachment or trespass, which may adversely affect the operation or maintenance of the mitigation sites, shall be permitted upon the rights-of-way of the facilities.

c. Significant changes to the project site, including, but not limited to, major modifications to the topography or vegetative structure of the site, shall be coordinated with the Fish and Wildlife Service and with approval of the Army Corps of Engineers. Site maintenance is not considered a significant change. Such improvement, excavation, construction, or alterations as may be found to be desirable and permissible shall be constructed in accordance with standard engineering or environmental restoration practices. Advice regarding the effect of proposed improvements or alterations on the functioning of the restoration site and information concerning methods of construction acceptable under standard engineering practices shall be obtained from the Army Corps Construction Operations Division as necessary and the US Fish and Wildlife Service, or if otherwise obtained, shall be submitted for their approval. Drawings or prints showing such improvements or alterations as finally constructed shall be furnished to the Army Corps Construction Operations Division if necessary after completion of the work.

d. The District Engineer or his authorized representative shall coordinate access with the Non-Federal Sponsor at all times to all portions of the mitigation sites.

3-02 ANNUAL REPORT

The Non-Federal Sponsor shall prepare an annual report (per calendar year) for the mitigation sites for submittal to the District Engineer. A copy of the report will be provided to the District Engineer of the USACE Environmental Resources Branch (CESPK-PD-R), and the USACE Project Manager (CESPK-PM) by email or by conventional mail. The annual report shall compile all data from the checklists that are completed during inspections (refer to section 3-09).

The annual report shall address all significant events that took place during the previous 12 months and shall include: the checklists for all inspections, a photographic record of overall conditions, a photographic record of specific significant damage and a summary statement of the general vegetation conditions for the reporting period. The Annual Report shall include a schedule for the following year's annual inspection as identified in Section 3-04 below and shall serve as notice to USACE of the inspection.

3-03 SAFETY REQUIREMENTS

All pertinent safety codes shall be incorporated into maintenance procedures. All maintenance workers, whether employed or volunteers, shall be given the necessary protective equipment and apparel together with instructions to conduct their work without undue exposure to hazards.

3-04 INSPECTIONS

Annual site inspections required by the USACE shall be performed at least once a year for the condition of the site. The inspections shall be initiated by the Non-Federal Sponsor and shall include any interested agencies to compare the condition of the mitigation sites with the goals of the plans as stated in the environmental documentation and other project documents. The Non-Federal Sponsor shall provide the USACE written notice 30 days prior to all inspections and invite the USACE to participate in the inspections. The inspection shall be in spring, between April and May. Leaves emerge from buds at this time facilitating plant identification and evaluation of general plant health and mortality.

3-05 CHECKLISTS

A specific checklist form for reporting results of inspections of the site is contained in this supplement as Exhibit E. These checklists shall be completed during each inspection.

SECTION IV

MAINTENANCE OF THE RESTORED SITE

4-01 INTRODUCTION

This section addresses maintenance requirements for vegetation and associated items for the South Fork Putah site. The goals for this project are to restore existing riparian habitat adjacent to the creek; expand the riparian and upland habitat to the higher terrace zone; and revegetate oak savannah habitat to the previously farmed terrace areas.

4-02 GENERAL

Plants that have established themselves will continue to live without any supplemental support by maintenance personnel. The following items address impacts that shall be addressed by, and are the responsibility of, the Non-Federal Sponsor in maintaining acceptable site and plant conditions so that vegetative growth will not be impeded. Maintenance tasks may include the following: noxious weed control, replanting, thinning of non-native species, grazing, flood repair, debris removal, repair of fencing and gates, repair of signage, damage repair, prescribed burning, erosion control, and maintenance of firebreaks. The scope of work for each task is described below.

The Non-Federal Sponsor shall keep written records of all maintenance tasks performed and submit them with the annual report as described in Section 3-02.

4-03 VEGETATION MAINTENANCE

a. General Plant Care: The site is not intended to be maintained to park-like conditions. Greater habitat value is afforded by those conditions that might be unsightly in a park; for example, downed trees, broken branches, unmown grass, etc. No removal of vegetation shall occur without prior written approval from the District Engineer except as defined below in paragraph e. titled Noxious Weed Control.

b. There were approximately 90 Elderberry (*Sambucus mexicana*) planted in the Upper Riparian Zones UR1, UR2, UR3, UR4, UR5 and UR6 (see Exhibit C). Any vegetation maintenance on the South Fork Putah Site which involves work within 100 feet of an Elderberry shrub with any stems of 1" or greater shall follow either the conservation guidelines for the Valley Elderberry Longhorn Beetle (VELB), dated July 9, 1999, (Exhibit F) or subsequent revision, or other site specific vegetation maintenance recommendation for VELB resulting from consultation between the Non-Federal Sponsor and U.S. Fish and Wildlife Service. Since the South Fork Putah Preserve project was not originally intended to be for Elderberry Mitigation, the monitoring referred to in the U.S. Fish and Wildlife Service's Conservation Guidelines will not be required.

c. Preservation of Woody Vegetation: All native woody vegetation shall be allowed to grow without restraint at the restoration site. However, woody vegetation that directly interferes

with levee or revetment maintenance may be removed and placed elsewhere on the site. Preservation of woody vegetation helps achieve the mitigation goal of replacing lost habitat values at the site. In addition, the indigenous scenic and ecological values of the site will benefit from preservation of woody vegetation.

d. Volunteer Growth: The SFPC restoration site was designed to provide a multi-story riparian canopy and an Oak Savanna by planting a minimum number of riparian species to establish some baseline vegetation. An important component for success of the site is volunteer growth by riparian species. Mowing the mitigation areas will suppress volunteer growth and is not recommended. Regardless of whether the project site is mowed or grazed periodically, the Non-Federal Sponsor shall ensure that enough native vegetation is volunteering and growing on the project site to provide a gradual vegetative succession and ensure that all maintenance practices of adjoining lands under control of the Non-Federal Sponsor do not negatively affect the mitigation sites.

e. Noxious Weed Control: Weed control is not required. Per the State requirements, the Non-Federal Sponsor is allowed to control weeds within the guidelines of the State of California, Department of Food and Agriculture, Division of Plant Industry. Consistent with standard Integrated Pest Management (IPM) techniques practiced by the Non-Federal Sponsor, use of herbicide shall be minimized, mechanical and cultural weed controls emphasized, and care shall be taken to isolate the spray (or other method if used) so that only the targeted plant is affected. Ensure weed growth is controlled on the firebreaks, if any, at each site. For guidance refer to Pest Rating of Noxious Weed Species and Noxious Weed Seed, Exhibit G. Herbicides shall be applied in accordance with all State and Local regulations.

f. Selective Clearing/Pruning: Downed trees and branches, dead limbs, and dead trees provide habitat for numerous wildlife species. Therefore, clearing and pruning shall not occur unless such materials restrict site access, prove to be detrimental to the integrity of the bank protection structure, or present a risk to public safety.

g. Prescribed Burning: Prescribed Burning shall be allowed only at the Oak Savanna zones. The Non-Federal Sponsor shall inform the Corps of Engineers no less than 7 calendar days before the prescribed burn. The prescribed burn shall be done following all State and Local Codes and shall obtain necessary permits to safely conduct the burn. The burn shall be preformed by an experienced crew, with a Fire Leader with 5 years' experience, as part of a prescribed burn fire crew, having been a Fire Leader or Captain on a prescribed burn fire crew for no less than 10 burns. Trees and shrubs shall be protected from damage caused from fire getting too close. The Non-Federal Sponsor shall be responsible for damage caused by a prescribed burn. The prescribed burn shall not occur in months during the migratory or resident birds nesting season. For more information on having a safe prescribed burn, call the Yolo County Resource Conservation District at (530) 662-2037. A Fire and Logistics Plan shall be completed, and copies of the document shall be made available to the Non-Federal Sponsor and the Army Corps of Engineers 7 calendar days before the scheduled prescribed burn (see Exhibit H).

4-04 DEBRIS

a. Woody Debris and Felled Trees: Woody debris and felled trees are desirable unless a public safety hazard. While there are certain advantages provided by such materials (e.g., wildlife habitat and shelter) the presence of woody debris can pose a threat to public safety. At the South Fork Putah site, woody debris washing down the channel during high flows may settle out as the water levels recede. The issue of public safety will be the overriding consideration for deciding when to remove woody debris or felled trees. Any woody debris shall be removed as the result of a decision of the Non-Federal Sponsor, USACE, and permits obtained from the resource agencies. Debris may be moved to another location on site or anchored to minimize any public safety issues.

4-05 SIGNS, FENCES, GATES, AND OTHER MISC. ITEMS

Maintenance records of these items shall be presented as applicable in each annual report.

a. Signs: All signs located on the South Fork Putah site shall be repaired or replaced within 10 working days if they are found to be damaged or destroyed. At a minimum, signs shall be checked annually.

b. Fencing and Gates: Fencing and access gates shall be maintained in an operable condition.

c. Access Roads: The Non-Federal Sponsor shall be responsible to maintain the roads that will be used. Remaining access roads not used will be allowed to regrow.

4-06 GRAZING

Livestock grazing is permitted subject to the following conditions:

1. The Non-Federal Sponsor will be required to have a grazing plan and keep records to document each graze. In the plan, the Non-Federal Sponsor shall document the location within the project to be grazed, the duration of the graze, and the number of cattle to graze the zone. Within the zone, the plan shall catalog the number of trees and shrubs before each graze.

2. Grazing shall be monitored on a regular basis by the Non-Federal Sponsor for signs of overgrazing, damage to Riparian vegetation, and trampling of grass. Damage to trees, shrubs, and the native grass stand, as a direct result from grazing, shall be the responsibility of the Non-Federal Sponsor. It shall be required for the Non-Federal Sponsor to plant additional trees and shrubs for trees or shrubs that have been damaged by cattle (50 percent of the plant or more damaged by cattle). The Non-Federal Sponsor shall plant as many acorns (in Savanna Zones 1 and 2) to guarantee 2 trees that survive and live for a period of 5 years after planting for every tree damaged from grazing. The two surviving trees shall be then protected from cattle browsing and trampling.

3. Excessive rain: Once rain has caused saturation of the soil, or before excessive trampling has occurred, the Non-Federal Sponsor shall remove the cattle at once from the site.

4. The Non-Federal Sponsor will be responsible for the care and health of the cattle during grazing.

5. Before grazing, the cattle shall be given feed which is as free of weed as possible for such a time as it takes to go through the cattle's digestion system.

6. Photographic Record: The Non-Federal Sponsor shall take before-and-after photos of grazing areas before and after grazing.

7. The Non-Federal Sponsor will be required to coordinate with The Fish and Wildlife Service before any grazing is to occur in zones where there are Elderberry Shrubs growing on the site. These zones are Upland Riparian Zones (UR1, UR2, UR3, UR4, UR5 and UR6).

8. When Oak Trees planted at the site during the years of the project begin to bear acorns, the Non-Federal Sponsor shall begin walking the site in March or April to look for Oak Saplings if the specific zone is planned to be grazed later the same year. Oak saplings that are found on site shall be protected as needed to ensure vegetative sustainability.

9. All above records shall be made available to Federal Sponsor upon request.

4-07 DAMAGE REPAIR

The Non-Federal Sponsor shall be responsible for the restoration of sites due to human impacts and environmental damage indicated below. Discrepancies noted during the annual inspection and reported in the Annual Report (see 3-05) shall be reviewed with all concerned agencies and required actions relative to repair or replanting shall be decided by them.

a. Public Use: The public will have access to the Putah Creek Restoration site on a limited basis. The public's impact on a site will continue to be potentially disruptive to the vegetation. Ensure recreational activities do not impact the vegetation.

b. Vandalism: Vandalism is always a potential threat but generally decreases over time. Most vandalism involves the theft of planting stock while young (usually the first year after planting). As the plant root systems develop, the plants become hard to remove, and are no longer a desirable target. Cuttings of trees for firewood can be another long-term threat. Vandalism damage to signs, fences, and gates are long-term problems and shall be repaired or replaced by the Non-Federal Sponsor in a timely fashion.

c. Damage caused by domestic animals shall be the responsibility of the Non-Federal Sponsor (see Grazing 4-06).

d. Damage caused by Wildlife: Beaver, deer, rabbit, and gopher damage is an ongoing

threat to the vegetation. Beaver damage is the most common. Deer, rabbit and gopher damage are prevalent while the vegetation is young but will have less of an impact over time. Wildlife damage is considered an "Act of God."

e. Natural Environmental Damage: Natural processes are inevitable and could occur at any time during the course of re-establishing the vegetation. However, over time the damage will likely be less, due to the maturity of the vegetation. Wind throws of trees may increase over time as trees mature and provide beneficial habitat. They should not be removed as a measure of routine maintenance.

(1) Flood and Erosion: Flood and erosion damage could be an annual occurrence; such occurrences shall be documented in each annual report. Damage due to flooding will impact both vegetation and soil erosion.

(2) Fire and Wind: Fire and wind damage shall be documented in each annual report. Fire is a potential threat from both maintenance practices and public carelessness.

4-08 UNACCEPTABLE SITE USES

This section lists potential unacceptable uses at the restoration site. Any use not defined here with potential to cause significant damage to resources on site shall be discussed with all concerned agencies.

a. Camping
b. Unauthorized activity or access
c. Off-road vehicles
d. Mining for minerals, aggregate and sand
e. spoiling of dredge material

REFERENCES

Conservation Guidelines for the Valley Elderberry Longhorn Beetle, 9 July 1999, United States Department of the Interior, Fish and Wildlife Service.

Supplement to Standard Operation & Maintenance Manual Sacramento River Flood Control Project for Sacramento River Bank Protection Project, Phase 2, Part No. 1, for Vegetation on Mitigation Sites, Jan 2003, Sacramento District U.S. Army Corps of Engineers, Sacramento, California.

Environmental Assessment, Putah Creek South Fork Preserve, California. May 1996, Sacramento District U.S. Army Corps of Engineers, Sacramento, California.

APPENDIX

(Including Exhibits A through I)

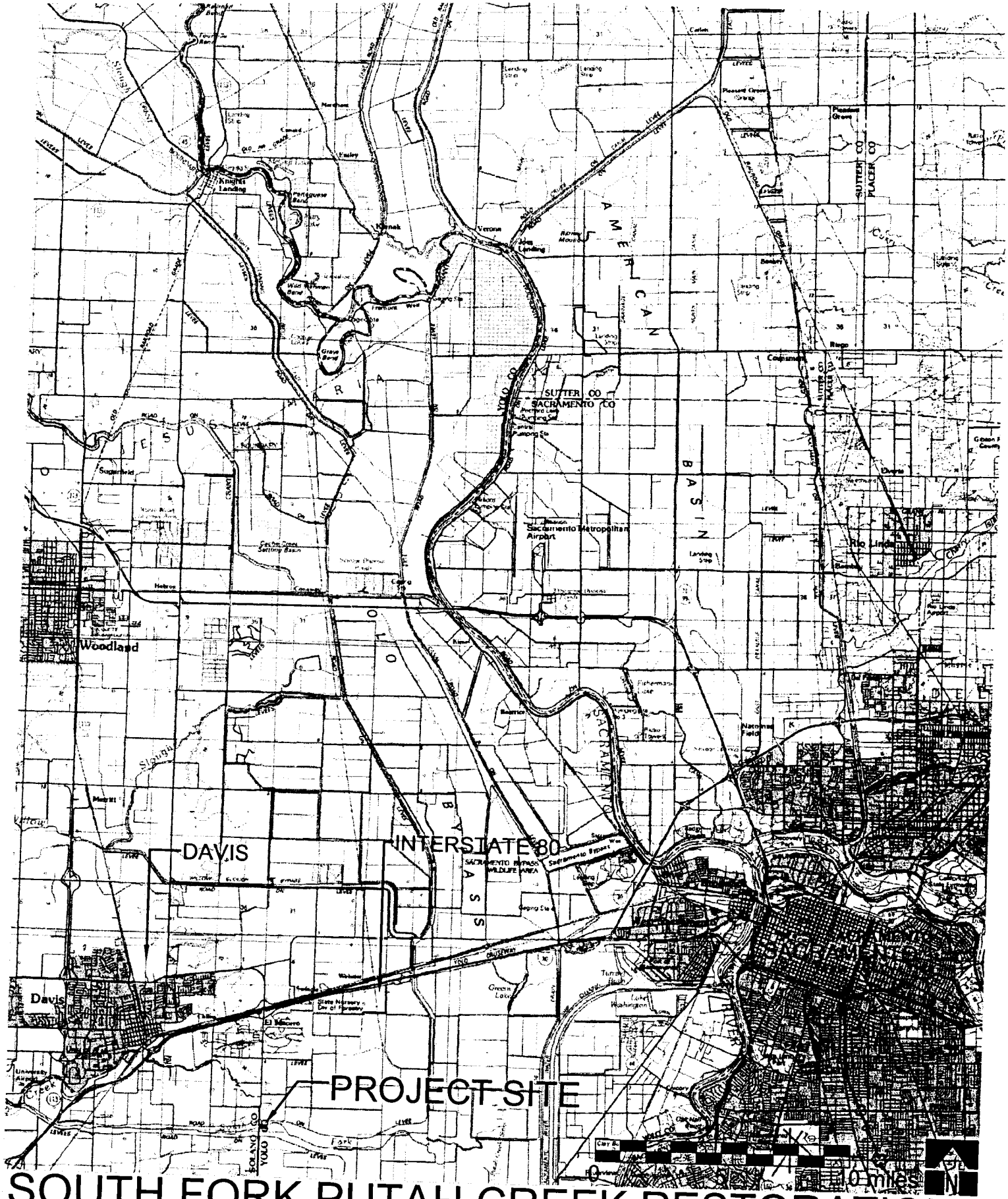

SOUTH FORK PUTAH CREEK RESTORATION VICINITY MAP

EXHIBIT A

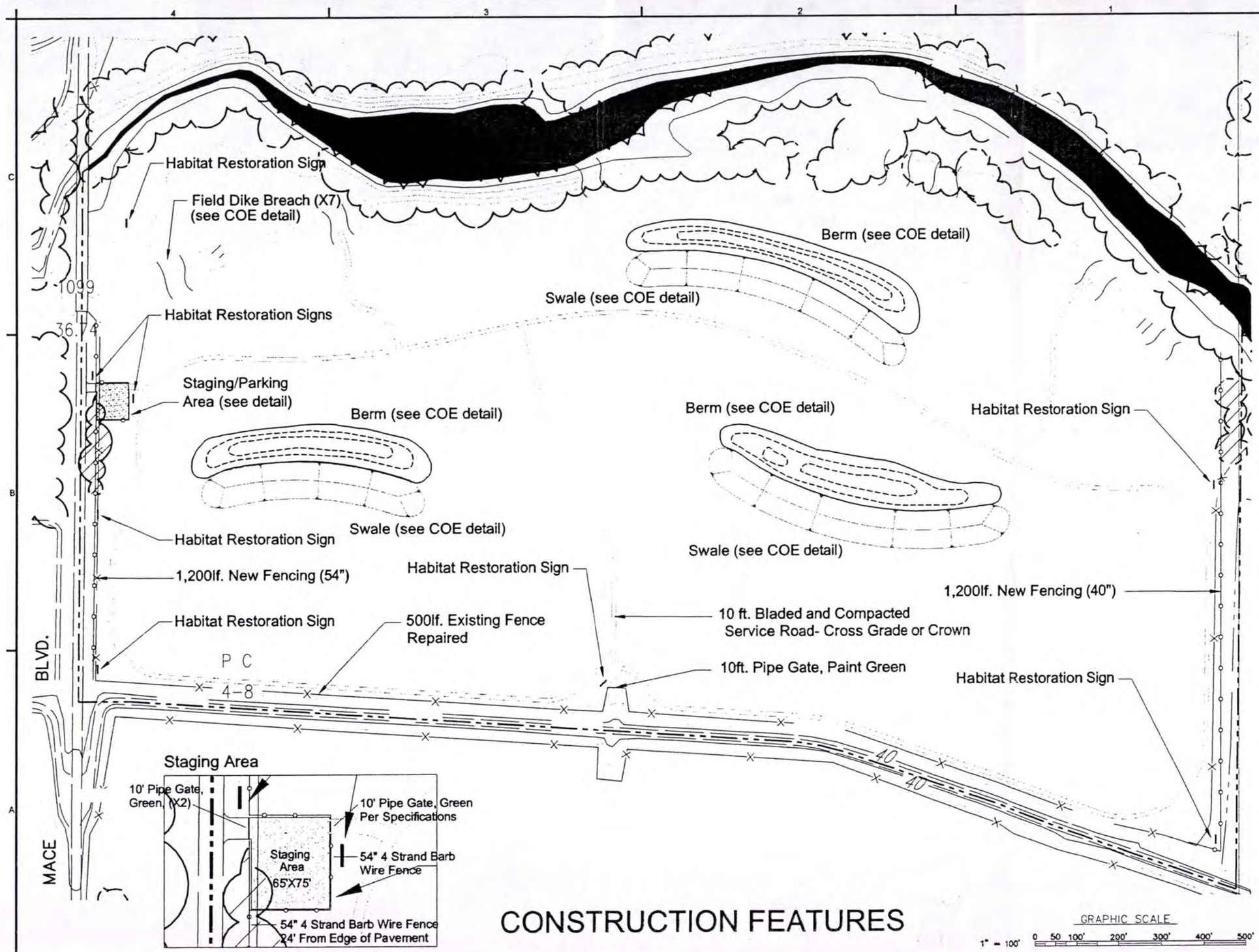

CONSTRUCTION FEATURES

EXHIBIT B

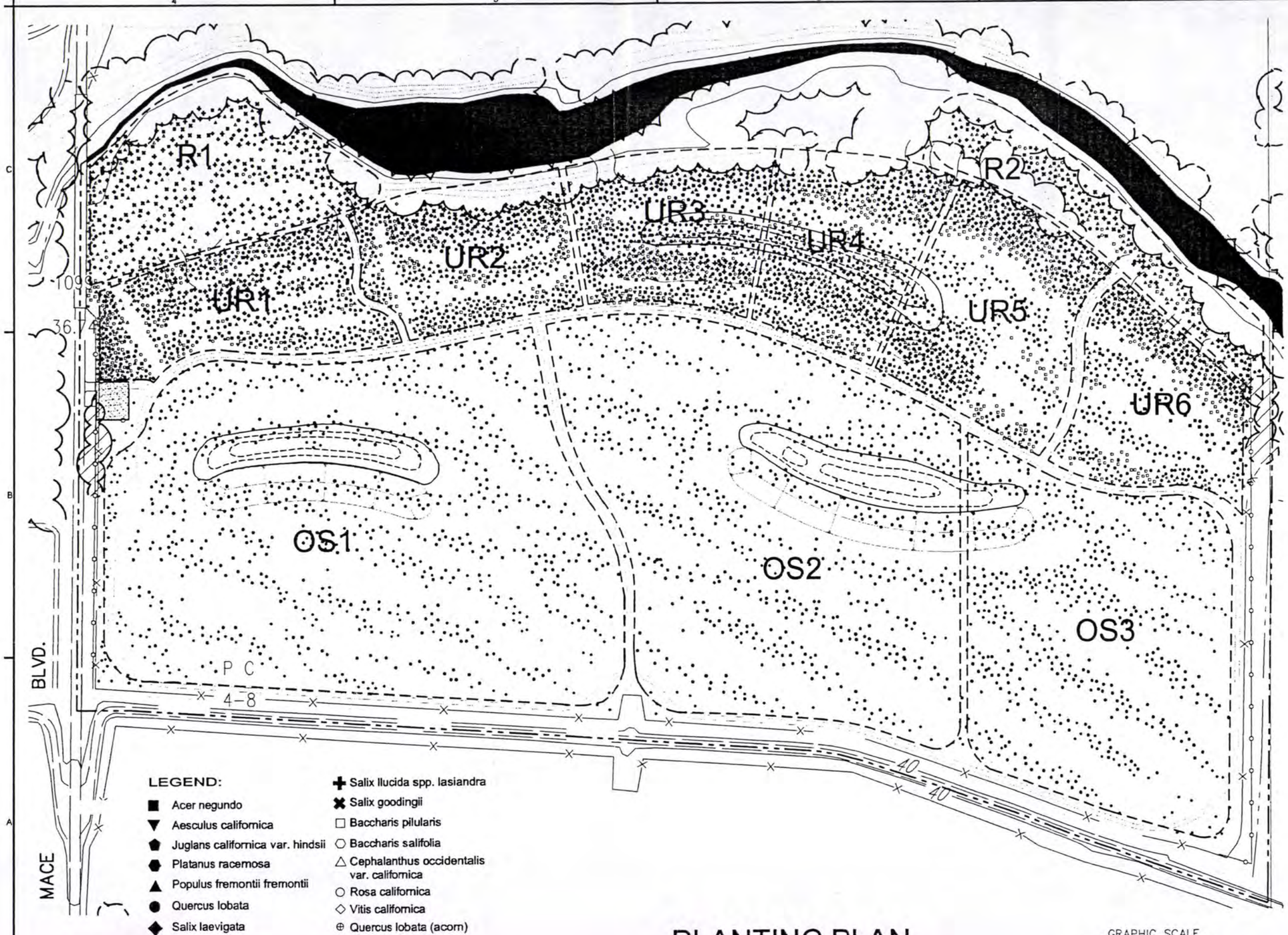

PLANTING PLAN

EXHIBIT B

US Army Corps of Engineers
Sacramento District

DEPARTMENT OF THE ARMY
CORPS OF ENGINEERS
SACRAMENTO, CALIFORNIA

YOLO COUNTY CALIFORNIA
SOUTH FORK PUTAH CREEK
RESTORATION PLANTING PLAN
AS-BUILT

Sheet reference number:
L-2
2 of 7

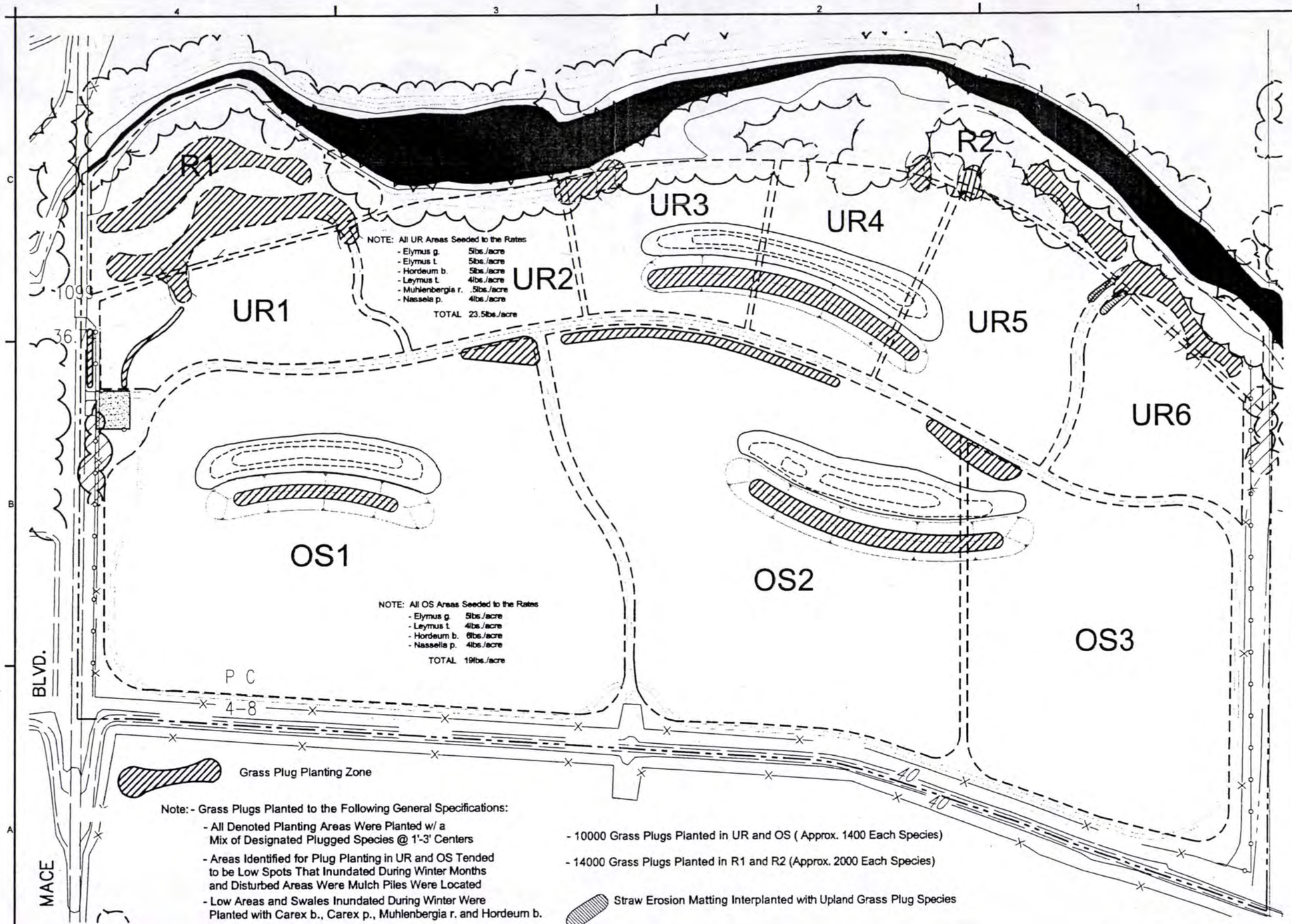

Note: - Grass Plugs Planted to the Following General Specifications:

- All Denoted Planting Areas Were Planted w/ a Mix of Designated Plugged Species @ 1'-3' Centers
- Areas Identified for Plug Planting in UR and OS Tended to be Low Spots That Inundated During Winter Months and Disturbed Areas Were Mulch Piles Were Located
- Low Areas and Swales Inundated During Winter Were Planted with Carex b., Carex p., Muhlenbergia r. and Hordeum b.
- Upland Areas Ringing Swales and Low Spots Planted with Elymus g., Elymus t., Leymus t. and Hordeum b.

- 10000 Grass Plugs Planted in UR and OS (Approx. 1400 Each Species)
- 14000 Grass Plugs Planted in R1 and R2 (Approx. 2000 Each Species)

GRASS PLUG LAYOUT

EXHIBIT B

US Army Corps of Engineers Sacramento District

DEPARTMENT OF THE ARMY CORPS OF ENGINEERS SACRAMENTO, CALIFORNIA

YOLO COUNTY CALIFORNIA

SOUTH FORK PUTAH CREEK

GRASS PLUG LAYOUT PLAN AS-BUILT

Sheet reference number: L-3

3 of 7

Irrigation Zone- R1

Controller Station
12 Station w/ Batteries
Mount to 4"X6" Post

Irrigation Zone- UR3

Irrigation Zone- UR4

Irrigation Zone- R2

Irrigation Zone- UR1

Irrigation Zone- UR2

2" PVC

1" Solenoid Valve

Irrigation Zone- UR5

Valve- R1

Valve- UR1

Valve- UR2

Valve- UR3

Valve- UR4

Valve- UR5

3/4" Hose Bib

Valve- OS2

1" PVC SCH 40
to Hose Bib

Valve- OS3

Irrigation Zone- UR6

Valve- UR6

Valve- R2

Irrigation Zone- OS1

Valve- OS1

Irrigation Zone- OS2

Irrigation Zone- OS3

2" PVC SCH 40 Mainline
24" Minimum Cover

Fexible PVC Riser
(see detail)

1.5" PVC CL 160 Lateral
24" Minimum Cover

POC (see detail 4/D-2

620-710 Drip Tube

Pump Assembly Modification
(see detail 4/D-2)

BLVD.

MACE

1" Hardie Soleniod Valve w/ Latching Solenoids
(see detail 6/D-2)

3/4" Hose Bib Mounted to 4" X4" Treated Post
Label as "Non-Potable"(see detail 8/D-3)

12 Station Controller I-BOK w/ Batteries
12-2 and 14-2 Direct Burial Wire
Mount to 4"X6" Treated DF Post 4' Above Grade

3/4" Flexible PVC Riser
(see detail 5/D-2)

1.5" and 2" Flush Valve Assembly
Label as "Non-Potable"(see detail 7/D-3)

2" PVC SCH 40 Mainline
24" Minimum Cover

1.5" PCS CL 160 Lateral Line
24" Minimum Cover

620-710 Netafim Drip Line
(Locations to be Determined In Field)

Note: Irrigation Zone Boundaries Differ from Monitoring Zones

IRRIGATION PLAN

GRAPHIC SCALE
1" = 100'
0 50 100' 200' 300' 400' 500'

EXHIBIT B

US Army Corps of Engineers
Sacramento District

DEPARTMENT OF THE ARMY
CORPS OF ENGINEERS
SACRAMENTO, CALIFORNIA

YOLO COUNTY
CALIFORNIA
SOUTH FORK PUTAH CREEK
IRRIGATION PLAN
AS-BUILT

Sheet reference number:
L-4
4 of 7

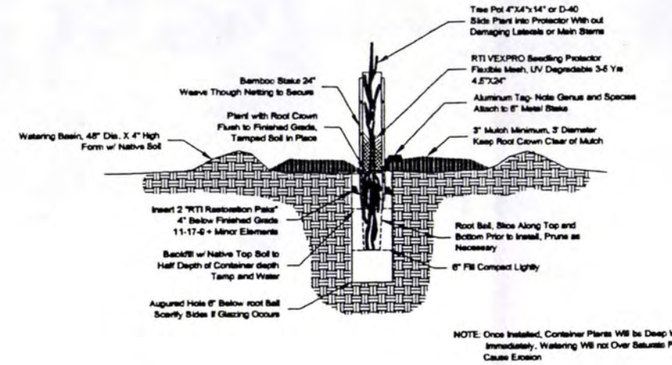

NOTE: Once Installed, Container Plants Will be Deep Watered Immediately, Watering Will not Over Saturate Plant or Cause Erosion

1
L-2 D-1

Container Plant

Not To Scale

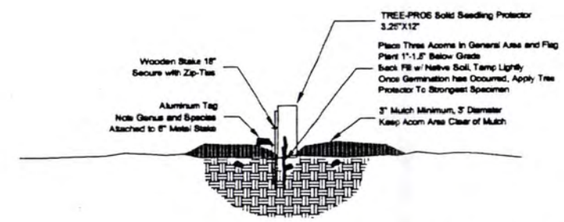

2
L-2 D-1

Acorn Planting

Not To Scale

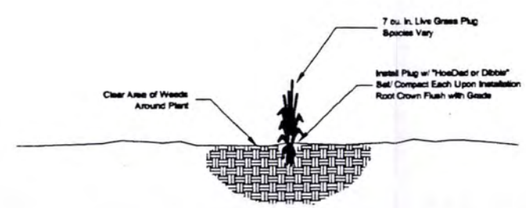

3
L-3 D-1

Live Plug

Not To Scale

EXHIBIT B

US Army Corps of Engineers
Sacramento District

Symbol	Description	Date	Approved

Symbol	Description	Date	Approved

Designed by: B. NAVARATH
Date: 11/1/99
Drawn by: B. NAVARATH
Checked by:
Design file no:
Reviewed by: M. PLUTTBACH
SPWC: No.:
Published by:
Dwg. Name: D-1.dwg
Plot date: 11/1/99
Plot scale: 1:1
Plot size: 24"x36"

DEPARTMENT OF THE ARMY
CORPS OF ENGINEERS
SACRAMENTO, CALIFORNIA

Natural Systems Restoration

YOLO COUNTY CALIFORNIA

SOUTH FORK PUTAH CREEK

PLANTING DETAILS
AS-BUILT

Sheet reference number:
D-1
5 of 7

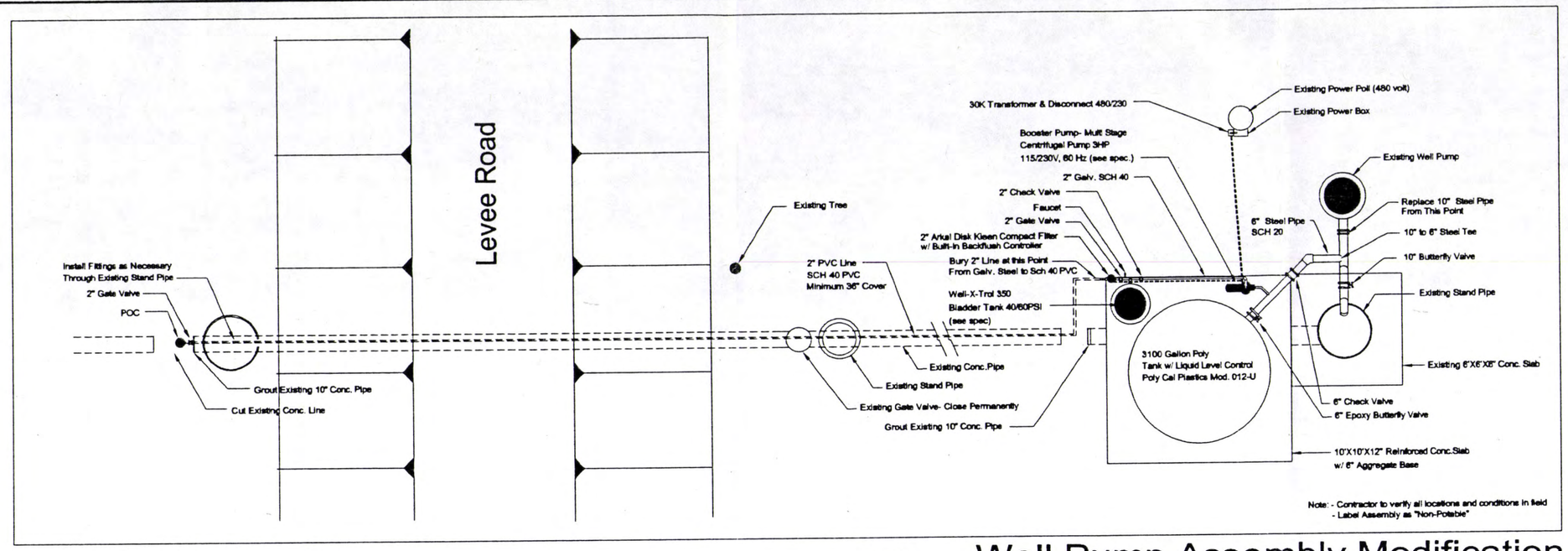

4 | L-4 | D-2

Well Pump Assembly Modification

Not to Scale

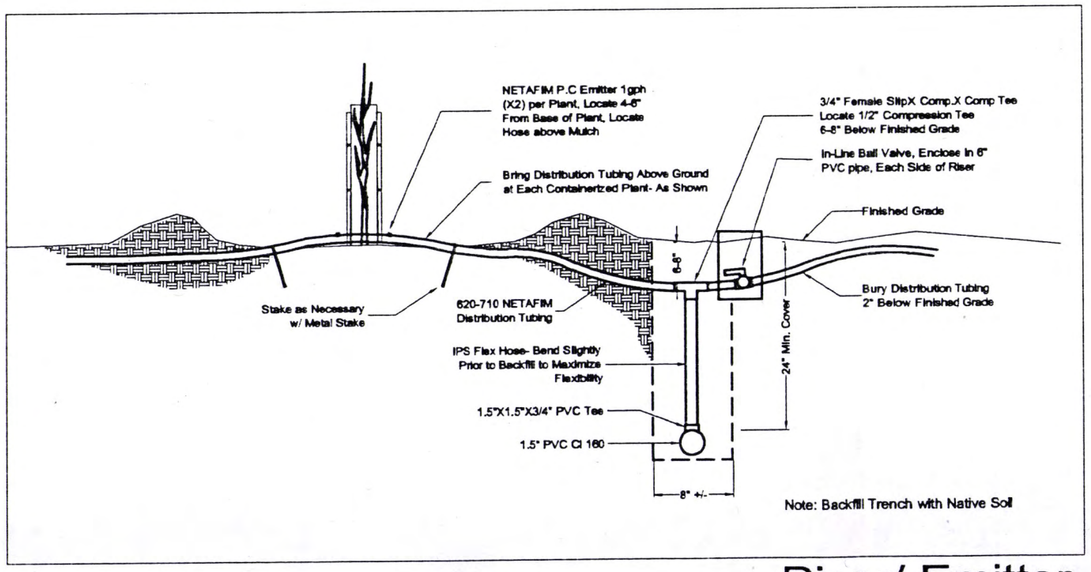

5 | L-4 | D-2

Riser/ Emitter

Not to Scale

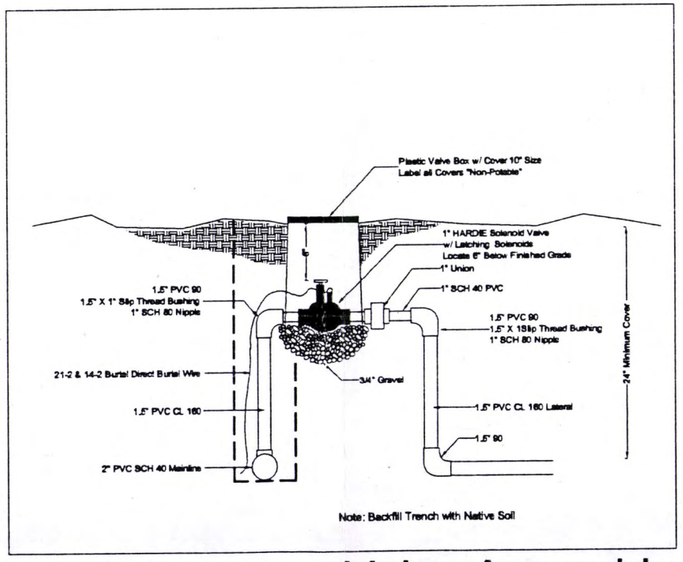

6 | L-4 | D-2

Valve Assembly

Not to Scale

US Army Corps of Engineers
Sacramento District

Symbol	Description	Date	Approved	Symbol	Description	Date	Approved

Designed by: E. NAWRATH
Date: 7/28/00
Drawn by: B. WARTNY
Checked by:
Reviewed by: M. PLUMBLEE
Submitted by:
Date: 7/28/00
Rev.
Design file no:
SPEC. No.:
File name: D-2 A-B.dwg
Plot date: 11/13/00
Plot scale: 1:1
Drawing No. (CF) No.

DEPARTMENT OF THE ARMY
CORPS OF ENGINEERS
SACRAMENTO, CALIFORNIA

BETTENCOURT WESTON FOX, INC.
CIVIL ENGINEERS • LAND SURVEYORS
208 E. St. Louis Ave. • P.O. Box 1247
Gilroy, California 95021-1247
(408) 848-2480 FAX (408) 848-2481

Bettencourt Weston Fox
Civil Engineers Land Surveyors

CALIFORNIA
YOLO COUNTY
SOUTH FORK PUTAH CREEK
IRRIGATION DETAILS
AS-BUILT

Sheet reference number:
D-2
6 of 7

EXHIBIT B

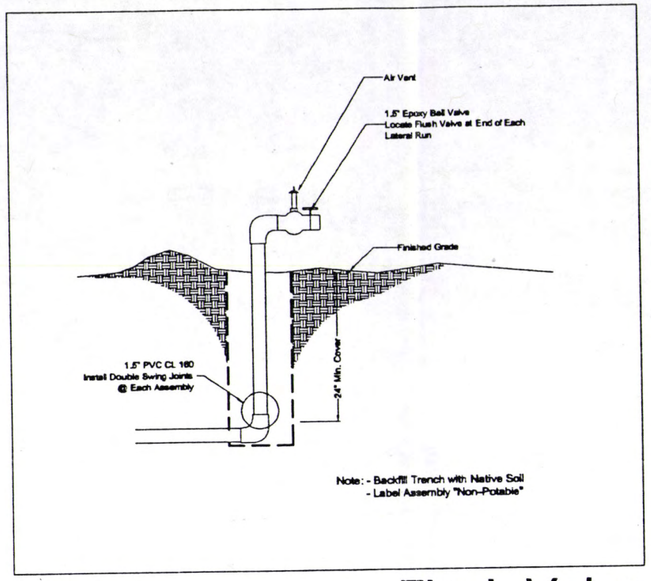

7
L-4 D-3

Flush Valve

Not to Scale

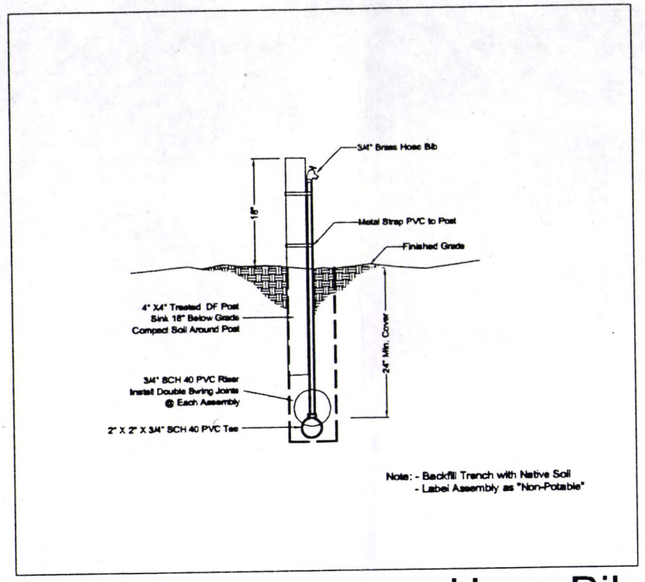

8
L-4 D-3

Hose Bib

Not to Scale

US Army Corps of Engineers
Sacramento District

Symbol	Description	Date	Approved

Symbol	Description	Date	Approved

Designed by: B. NAVRATH
Dwn by: B. NAVRATH
Ckd by:
Reviewed by: M. PLUTMUSKI
Submitted by:
Chief, Eng. Div. (CW) Sac.
Date: 7/29/05
Design file no:
SPEC. No.:
Rev:
Plot date: 07/29/05
Plot scale: 1:1

DEPARTMENT OF THE ARMY
CORPS OF ENGINEERS
SACRAMENTO, CALIFORNIA

Williams Engineering Consultants, Inc.

CALIFORNIA
YOLO COUNTY
SOUTH FORK PUTAH CREEK
IRRIGATION PLANS
AS-BUILT

Sheet reference number:
D-3
7 of 7

EXHIBIT B

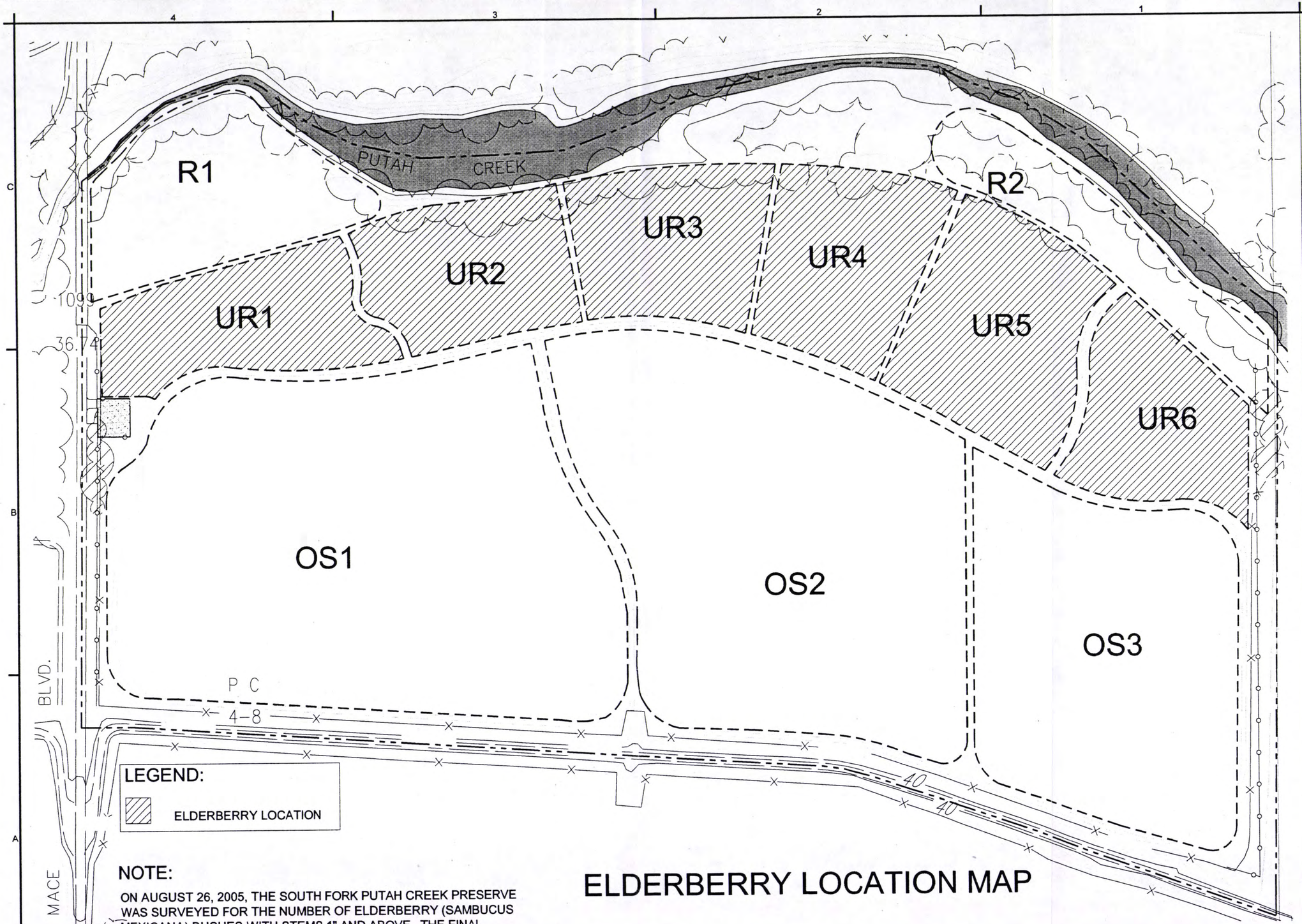

ELDERBERRY LOCATION MAP

NOTE:

ON AUGUST 26, 2005, THE SOUTH FORK PUTAH CREEK PRESERVE WAS SURVEYED FOR THE NUMBER OF ELDERBERRY (SAMBUCUS MEXICANA) BUSHES WITH STEMS 1" AND ABOVE. THE FINAL COUNT WAS 88 ELDERBERRY SHRUBS WITH 2 ADDITIONAL SHRUBS WITH STEMS UNDER 1".
ALL OF THE SHRUBS WERE FOUND IN THE UPPER RIPARAIN ZONES (HATCHED ABOVE).

US Army Corps of Engineers
Sacramento District

Symbol	Description	Date	Approved	Symbol	Description	Date	Approved

Designed by: | Date: | Rev.:
Dwn by: J. BULLIVAN | Ckd by: | Design file no:
Reviewed by: | SPEC. No:
Submitted by: | File name: E:_FLDRS.LOC
Chief, Rec. Dsn. (Civil) Sec. | Plot date: 9/4/05
Plot scale: 1:1

DEPARTMENT OF THE ARMY
CORPS OF ENGINEERS
SACRAMENTO, CALIFORNIA

YOLO COUNTY CALIFORNIA
SOUTH FORK PUTAH CREEK
ELDERBERRY (SAMBUCUS MEXICANA) LOCATIONS

Sheet reference number:
E-1
1 OF 1

EXHIBIT C

EXHIBIT E

CHECK LIST NO. 1

VEGETATION ON MITIGATION AREA INSPECTION FORM

Location of Area Inspected: Part No. __, Unit No.'s: _____ Date:_____
(including river mile(s))_____
Inspected by:_____

Report below the condition of the site and those items requiring maintenance work. Opposite each item listed, indicate the appropriate response, yes or no, in the area provided. Provide an attachment, if necessary, describing the negative significant conditions and any proposed/implemented maintenance work for each item. Note any changes, positive or negative, from the previous inspections.

Reference O&M Unit No.

Item No.	Description	Response	Yes	No*	N/A
1:	Mitigation area erosion free		:_____	....:_____	:_____
2:	Vegetation is free of fire damage		:_____	....:_____	:_____
3:	Vegetation is free of flood damage		:_____	....:_____	:_____
4:	Vegetation is free of wind damage		:_____	....:_____	:_____
5:	Vegetation is free of herbicide damage		:_____	....:_____	:_____
6:	Vegetation & equipment is free of vandalism		:_____	....:_____	:_____
7:	Site is free of trash		:_____	....:_____	:_____
8:	Access roads clear		:_____	....:_____	:_____
9:	Access gate barriers & locks in good working order		:_____	....:_____	:_____
10:	New volunteer growth (trees, shrubs) observed		:_____	....:_____	:_____
11:	Perimeter fencing in good working condition		:_____	....:_____	:_____
12:	Signs readable and in good condition		:_____	....:_____	:_____
13:	Other items:		:_____	....:_____	:_____

.....

COMMENTS_____
_____
_____
_____
_____
_____
_____
_____
_____
_____
_____

___*Requires explanation

EXHIBIT F

United States Department of the Interior
FISH AND WILDLIFE SERVICE
Sacramento Fish and Wildlife Office
2800 Cottage Way, Room W-2605
Sacramento, California 95825
Conservation Guidelines for the
Valley Elderberry Longhorn Beetle
9 July 1999

The following guidelines have been issued by the U.S. Fish and Wildlife Service (Service) to assist Federal agencies and non-federal project applicants needing incidental take authorization through a section 7 consultation or a section 10(a)(1)(B) permit in developing measures to avoid and minimize adverse effects on the valley elderberry longhorn beetle. The Service will revise these guidelines as needed in the future. The most recently issued version of these guidelines should be used in developing all projects and habitat restoration plans. The survey and monitoring procedures described below are designed to avoid any adverse effects to the valley elderberry longhorn beetle. Thus a recovery permit is not needed to survey for the beetle or its habitat or to monitor conservation areas. If you are interested in a recovery permit for research purposes please call the Service's Regional Office at (503) 231-2063.

Background Information

The valley elderberry longhorn beetle (Desmocerus californicus dimorphus), was listed as a threatened species on August 8, 1980 (Federal Register 45: 52803-52807). This animal is fully protected under the Endangered Species Act of 1973, as amended (16 U.S.C. 1531 et seq.). The valley elderberry longhorn beetle (beetle) is completely dependent on its host plant, elderberry (Sambucus species), which is a common component of the remaining riparian forests and adjacent upland habitats of California's Central Valley. Use of the elderberry by the beetle, a wood borer, is rarely apparent. Frequently, the only exterior evidence of the elderberry's use by the beetle is an exit hole created by the larva just prior to the pupal stage. The life cycle takes one or two years to complete. The animal spends most of its life in the larval stage, living within the stems of an elderberry plant. Adult emergence is from late March through June, about the same time the elderberry produces flowers. The adult stage is short-lived. Further information on the life history, ecology, behavior, and distribution of the beetle can be found in a report by Barr (1991) and the recovery plan for the beetle (USFWS 1984).

Surveys

Proposed project sites within the range of the valley elderberry longhorn beetle should be surveyed for the presence of the beetle and its elderberry host plant by a qualified biologist. The beetle's range extends throughout California's Central Valley and associated foothills from about the 3,000-foot elevation contour on the east and the watershed of the Central Valley on the west (Figure 1). All or portions of 31 counties are included: Alameda, Amador, Butte, Calaveras, Colusa, Contra Costa, El Dorado, Fresno, Glenn, Kern, Kings, Lake, Madera, Mariposa, Merced, Napa, Nevada, Placer, Sacramento, San Benito, San Joaquin, San Luis Obispo, Shasta, Solano, Stanislaus, Sutter, Tehama, Tulare, Tuolumne, Yolo, Yuba.

If elderberry plants with one or more stems measuring 1.0 inch or greater in diameter at ground level occur on or adjacent to the proposed project site, or are otherwise located where they may be directly or indirectly affected by the proposed action, minimization measures which include planting replacement habitat (conservation planting) are required (Table 1).

All elderberry shrubs with one or more stems measuring 1.0 inch or greater in diameter at ground level that occur on or adjacent to a proposed project site must be thoroughly searched for beetle exit holes (external evidence of beetle presence). In addition, all elderberry stems one inch or greater in diameter at ground level must be tallied by diameter size class (Table 1). As outlined in Table 1, the numbers of elderberry seedlings/cuttings and associated riparian native trees/shrubs to be planted as replacement habitat are determined by stem size class of affected elderberry shrubs, presence or absence of exit holes, and whether a proposed project lies in a riparian or non-riparian area.

Elderberry plants with no stems measuring 1.0 inch or greater in diameter at ground level are unlikely to be habitat for the beetle because of their small size and/or immaturity. Therefore, no minimization measures are required for removal of elderberry plants with no stems measuring 1.0 inch or greater in diameter at ground level with no exit holes. Surveys are valid for a period of two years.

Avoid and Protect Habitat Whenever Possible

Project sites that do not contain beetle habitat are preferred. If suitable habitat for the beetle occurs on the project site, or within close proximity where beetles will be affected by the project, these areas must be designated as avoidance areas and must be protected from disturbance during the construction and operation of the project. When possible, projects should be designed such that avoidance areas are connected with adjacent habitat to prevent fragmentation and isolation of beetle populations. Any beetle habitat that cannot be avoided as described below should be considered impacted and appropriate minimization measures should be proposed as described below.

Avoidance: Establishment and Maintenance of a Buffer Zone

Complete avoidance (i.e., no adverse effects) may be assumed when a 100-foot (or wider) buffer is established and maintained around elderberry plants containing stems measuring 1.0 inch or greater in diameter at ground level. Firebreaks may not be included in the buffer zone. In buffer areas construction-related disturbance should be minimized, and any damaged area should be promptly restored following construction. The Service must be consulted before any disturbances within the buffer area are considered. In addition, the Service must be provided with a map identifying the avoidance area and written details describing avoidance measures.

Protective Measures

1. Fence and flag all areas to be avoided during construction activities. In areas where encroachment on the 100-foot buffer has been approved by the Service, provide a minimum setback of at least 20 feet from the dripline of each elderberry plant.

2. Brief contractors on the need to avoid damaging the elderberry plants and the possible penalties for not complying with these requirements.

3. Erect signs every 50 feet along the edge of the avoidance area with the following information: "This area is habitat of the valley elderberry longhorn beetle, a threatened species, and must not be disturbed. This species is protected by the Endangered Species Act of 1973, as amended. Violators are subject to prosecution, fines, and imprisonment." The signs should be clearly readable from a distance of 20 feet, and must be maintained for the duration of construction.

4. Instruct work crews about the status of the beetle and the need to protect its elderberry host plant.

Restoration and Maintenance

1. Restore any damage done to the buffer area (area within 100 feet of elderberry plants) during construction. Provide erosion control and re-vegetate with appropriate native plants.

2. Buffer areas must continue to be protected after construction from adverse effects of the project. Measures such as fencing, signs, weeding, and trash removal are usually appropriate.

3. No insecticides, herbicides, fertilizers, or other chemicals that might harm the beetle or its host plant should be used in the buffer areas, or within 100 feet of any elderberry plant with one or more stems measuring 1.0 inch or greater in diameter at ground level.

4. The applicant must provide a written description of how the buffer areas are to be restored, protected, and maintained after construction is completed.

5. Mowing of grasses/ground cover may occur from July through April to reduce fire hazard. No mowing should occur within five (5) feet of elderberry plant stems. Mowing must be done in a manner that avoids damaging plants (e.g., stripping away bark through careless use of mowing/trimming equipment).

Transplant Elderberry Plants That Cannot Be Avoided

Elderberry plants must be transplanted if they can not be avoided by the proposed project. All elderberry plants with one or more stems measuring 1.0 inch or greater in diameter at ground level must be transplanted to a conservation area (see below). At the Service's discretion, a plant that is unlikely to survive transplantation because of poor condition or location, or a plant that would be extremely difficult to move because of access problems, may be exempted from transplantation. In cases where transplantation is not possible the minimization ratios in Table 1 may be increased to offset the additional habitat loss.

Trimming of elderberry plants (e.g., pruning along roadways, bike paths, or trails) with one or more stems 1.0 inch or greater in diameter at ground level, may result in take of beetles. Therefore, trimming is subject to appropriate minimization measures as outlined in Table 1.

1. Monitor. A qualified biologist (monitor) must be on-site for the duration of the transplanting of the elderberry plants to insure that no unauthorized take of the valley elderberry longhorn beetle occurs. If unauthorized take occurs, the monitor must have the authority to stop work until corrective measures have been completed. The monitor must immediately report any unauthorized take of the beetle or its habitat to the Service and to the California Department of Fish and Game.

2. Timing. Transplant elderberry plants when the plants are dormant, approximately November through the first two weeks in February, after they have lost their leaves. Transplanting during the non-growing season will reduce shock to the plant and increase transplantation success.

3. Transplanting Procedure.

a. Cut the plant back 3 to 6 feet from the ground or to 50 percent of its height (whichever is taller) by removing branches and stems above this height. The trunk and all stems measuring 1.0 inch or greater in diameter at ground level should be replanted. Any leaves remaining on the plant should be removed.

b. Excavate a hole of adequate size to receive the transplant.

c. Excavate the plant using a Vemeer spade, backhoe, front end loader, or other suitable equipment, taking as much of the root ball as possible, and replant immediately at the conservation area. Move the plant only by the root ball. If the plant is to be moved and transplanted off site, secure the root ball with wire and wrap it with burlap. Dampen the burlap with water, as necessary, to keep the root ball wet. Do not let the roots dry out. Care should be taken to ensure that the soil is not dislodged from around the roots of the transplant. If the site receiving the transplant does not have adequate soil moisture, pre-wet the soil a day or two before transplantation.

d. The planting area must be at least 1,800 square feet for each elderberry transplant. The root ball should be planted so that its top is level with the existing ground. Compact the soil sufficiently so that settlement does not occur. As many as five (5) additional elderberry plantings (cuttings or seedlings) and up to five (5) associated native species plantings (see below) may also be planted within the 1,800 square foot area with the transplant. The transplant and each new planting should have its own watering basin measuring at least three (3) feet in diameter. Watering basins should have a continuous berm measuring approximately eight (8) inches wide at the base and six (6) inches high.

e. Saturate the soil with water. Do not use fertilizers or other supplements or paint the tips of stems with pruning substances, as the effects of these compounds on the beetle are unknown.

f. Monitor to ascertain if additional watering is necessary. If the soil is sandy and well-drained, plants may need to be watered weekly or twice monthly. If the soil is clayey and poorly-drained, it may not be necessary to water after the initial saturation. However, most transplants require watering through the first summer. A drip watering system and timer is ideal. However, in situations where this is not possible, a water truck or other apparatus may be used.

Plant Additional Seedlings or Cuttings

Each elderberry stem measuring 1.0 inch or greater in diameter at ground level that is adversely affected (i.e., transplanted or destroyed) must be replaced, in the conservation area, with elderberry seedlings or cuttings at a ratio ranging from 1:1 to 8:1 (new plantings to affected stems). Minimization ratios are listed and explained in Table 1. Stock of either seedlings or cuttings should be obtained from local sources. Cuttings may be obtained from the plants to be transplanted if the project site is in the vicinity of the conservation area. If the Service determines that the elderberry plants on the proposed project site are unsuitable candidates for

transplanting, the Service may allow the applicant to plant seedlings or cuttings at higher than the stated ratios in Table 1 for each elderberry plant that cannot be transplanted.

Plant Associated Native Species

Studies have found that the beetle is more abundant in dense native plant communities with a mature overstory and a mixed understory. Therefore, a mix of native plants associated with the elderberry plants at the project site or similar sites will be planted at ratios ranging from 1:1 to 2:1 [native tree/plant species to each elderberry seedling or cutting (see Table 1)]. These native plantings must be monitored with the same survival criteria used for the elderberry seedlings (see below). Stock of saplings, cuttings, and seedlings should be obtained from local sources. If the parent stock is obtained from a distance greater than one mile from the conservation area, approval by the Service of the native plant donor sites must be obtained prior to initiation of the revegetation work. Planting or seeding the conservation area with native herbaceous species is encouraged. Establishing native grasses and forbs may discourage unwanted non-native species from becoming established or persisting at the conservation area. Only stock from local sources should be used.

Examples

Example 1
The project will adversely affect beetle habitat on a vacant lot on the land side of a river levee. This levee now separates beetle habitat on the vacant lot from extant Great Valley Mixed Riparian Forest (Holland 1986) adjacent to the river. However, it is clear that the beetle habitat located on the vacant lot was part of a more extensive mixed riparian forest ecosystem extending farther from the river's edge prior to agricultural development and levee construction. Therefore, the beetle habitat on site is considered riparian. A total of two elderberry plants with at least one stem measuring 1.0 inch or greater in diameter at ground level will be affected by the proposed action. The two plants have a total of 15 stems measuring over 1.0 inch. No exit holes were found on either plant. Ten of the stems are between 1.0 and 3.0 inches in diameter and five of the stems are greater than 5.0 inches in diameter. The conservation area is suited for riparian forest habitat. Associated natives adjacent to the conservation area are box elder (Acer negundo californica), walnut (Juglans californica var. hindsii), sycamore (Platanus racemosa), cottonwood (Populus fremontii), willow (Salix gooddingii and S. laevigata), white alder (Alnus rhombifolia), ash (Fraxinus latifolia), button willow (Cephalanthus occidentalis), and wild grape (Vitis californica).

Minimization (based on ratios in Table 1):

• Transplant the two elderberry plants that will be affected to the conservation area.

• Plant 40 elderberry rooted cuttings (10 affected stems compensated at 2:1 ratio and 5 affected stems compensated at 4:1 ratio, cuttings planted:stems affected)

• Plant 40 associated native species (ratio of associated natives to elderberry plantings is 1:1 in areas with no exit holes):

5 saplings each of box elder, sycamore, and cottonwood
5 willow seedlings
5 white alder seedlings
5 saplings each of walnut and ash
3 California button willow
2 wild grape vines
Total: 40 associated native species

• Total area required is a minimum of 1,800 sq. ft. for one to five elderberry seedlings and up to 5 associated natives. Since, a total of 80 plants must be planted (40 elderberries and 40 associated natives), a total of 0.33 acre (14,400 square feet) will be required for conservation plantings. The conservation area will be seeded and planted with native grasses and forbs, and closely monitored and maintained throughout the monitoring period.

Example 2
The project will adversely affect beetle habitat in Blue Oak Woodland (Holland 1986). One elderberry plant with at least one stem measuring 1.0 inch or greater in diameter at ground level will be affected by the proposed action. The plant has a total of 10 stems measuring over 1.0 inch. Exit holes were found on the plant. Five of the stems are between 1.0 and 3.0 inches in diameter and five of the stems are between 3.0 and 5.0 inches in diameter. The conservation area is suited for elderberry savanna (non-riparian habitat). Associated natives adjacent to the conservation area are willow (Salix species), blue oak (Quercus douglasii), interior live oak (Q. wislizenii), sycamore, poison oak (Toxicodendron diversilobum), and wild grape.
Minimization (based on ratios in Table 1):

• Transplant the one elderberry plant that will be affected to the conservation area.

• Plant 30 elderberry seedlings (5 affected stems compensated at 2:1 ratio and 5 affected stems compensated at 4:1 ratio, cuttings planted:stems affected)

• Plant 60 associated native species (ratio of associated natives to elderberry plantings is 2:1 in areas with exit holes):

20 saplings of blue oak, 20 saplings of sycamore, and 20 saplings of willow, and seed and plant with a mixture of native grasses and forbs

• Total area required is a minimum of 1,800 sq. ft. for one to five elderberry seedlings and up to 5 associated natives. Since, a total of 90 plants must be planted (30 elderberries and 60 associated natives), a total of 0.37 acre (16,200 square feet) will be required for conservation plantings. The conservation area will be seeded and planted with native grasses and forbs, and closely monitored and maintained throughout the monitoring period.

Conservation Area—Provide Habitat for the Beetle in Perpetuity

The conservation area is distinct from the avoidance area (though the two may adjoin), and serves to receive and protect the transplanted elderberry plants and the elderberry and other native plantings. The Service may accept proposals for off-site conservation areas where appropriate.

1. Size. The conservation area must provide at least 1,800 square feet for each transplanted elderberry plant. As many as 10 conservation plantings (i.e., elderberry cuttings or seedlings and/or associated native plants) may be planted within the 1800 square foot area with each transplanted elderberry. An additional 1,800 square feet shall be provided for every additional 10 conservation plants. Each planting should have its own watering basin measuring approximately three feet in diameter. Watering basins should be constructed with a continuous berm measuring approximately eight inches wide at the base and six inches high.

The planting density specified above is primarily for riparian forest habitats or other habitats with naturally dense cover. If the conservation area is an open habitat (i.e., elderberry savanna, oak woodland) more area may be needed for the required plantings. Contact the Service for assistance if the above planting recommendations are not appropriate for the proposed conservation area.

No area to be maintained as a firebreak may be counted as conservation area. Like the avoidance area, the conservation area should connect with adjacent habitat wherever possible, to prevent isolation of beetle populations.

Depending on adjacent land use, a buffer area may also be needed between the conservation area and the adjacent lands. For example, herbicides and pesticides are

often used on orchards or vineyards. These chemicals may drift or runoff onto the conservation area if an adequate buffer area is not provided.

2. Long-Term Protection. The conservation area must be protected in perpetuity as habitat for the valley elderberry longhorn beetle. A conservation easement or deed restrictions to protect the conservation area must be arranged. Conservation areas may be transferred to a resource agency or appropriate private organization for long-term management. The Service must be provided with a map and written details identifying the conservation area; and the applicant must receive approval from the Service that the conservation area is acceptable prior to initiating the conservation program. A true, recorded copy of the deed transfer, conservation easement, or deed restrictions protecting the conservation area in perpetuity must be provided to the Service before project implementation. Adequate funds must be provided to ensure that the conservation area is managed in perpetuity. The applicant must dedicate an endowment fund for this purpose, and designate the party or entity that will be responsible for long-term management of the conservation area. The Service must be provided with written documentation that funding and management of the conservation area (items 3-8 above) will be provided in perpetuity.

3. Weed Control. Weeds and other plants that are not native to the conservation area must be removed at least once a year, or at the discretion of the Service and the California Department of Fish and Game. Mechanical means should be used; herbicides are prohibited unless approved by the Service.

4. Pesticide and Toxicant Control. Measures must be taken to insure that no pesticides, herbicides, fertilizers, or other chemical agents enter the conservation area. No spraying of these agents must be done within one 100 feet of the area, or if they have the potential to drift, flow, or be washed into the area in the opinion of biologists or law enforcement personnel from the Service or the California Department of Fish and Game.

5. Litter Control. No dumping of trash or other material may occur within the conservation area. Any trash or other foreign material found deposited within the conservation area must be removed within 10 working days of discovery.

6. Fencing. Permanent fencing must be placed completely around the conservation area to prevent unauthorized entry by off-road vehicles, equestrians, and other parties that might damage or destroy the habitat of the beetle, unless approved by the Service. The applicant must receive written approval from the Service that the fencing is acceptable prior to initiation of the conservation program. The fence must be maintained in perpetuity, and must be repaired/replaced within 10 working days if it is found to be damaged. Some conservation areas may be made available to the public for appropriate recreational and educational opportunities with written approval from the Service. In

these cases appropriate fencing and signs informing the public of the beetle's threatened status and its natural history and ecology should be used and maintained in perpetuity.

7. Signs. A minimum of two prominent signs must be placed and maintained in perpetuity at the conservation area, unless otherwise approved by the Service. The signs should note that the site is habitat of the federally threatened valley elderberry longhorn beetle and, if appropriate, include information on the beetle's natural history and ecology. The signs must be approved by the Service. The signs must be repaired or replaced within 10 working days if they are found to be damaged or destroyed.

Monitoring

The population of valley elderberry longhorn beetles, the general condition of the conservation area, and the condition of the elderberry and associated native plantings in the conservation area must be monitored over a period of either ten (10) consecutive years or for seven (7) years over a 15-year period. The applicant may elect either 10 years of monitoring, with surveys and reports every year; or 15 years of monitoring, with surveys and reports on years 1, 2, 3, 5, 7, 10, and 15. The conservation plan provided by the applicant must state which monitoring schedule will be followed. No change in monitoring schedule will be accepted after the project is initiated. If conservation planting is done in stages (i.e., not all planting is implemented in the same time period), each stage of conservation planting will have a different start date for the required monitoring time.

Surveys. In any survey year, a minimum of two site visits between February 14 and June 30 of each year must be made by a qualified biologist. Surveys must include:

1. A population census of the adult beetles, including the number of beetles observed, their condition, behavior, and their precise locations. Visual counts must be used; mark-recapture or other methods involving handling or harassment must not be used.

2. A census of beetle exit holes in elderberry stems, noting their precise locations and estimated ages.

3. An evaluation of the elderberry plants and associated native plants on the site, and on the conservation area, if disjunct, including the number of plants, their size and condition.

4. An evaluation of the adequacy of the fencing, signs, and weed control efforts in the avoidance and conservation areas.

5. A general assessment of the habitat, including any real or potential threats to the beetle and its host plants, such as erosion, fire, excessive grazing, off-road vehicle use, vandalism, excessive weed growth, etc.

The materials and methods to be used in the monitoring studies must be reviewed and approved by the Service. All appropriate Federal permits must be obtained prior to initiating the field studies.

Reports. A written report, presenting and analyzing the data from the project monitoring, must be prepared by a qualified biologist in each of the years in which a monitoring survey is required. Copies of the report must be submitted by December 31 of the same year to the Service (Chief of Endangered Species, Sacramento Fish and Wildlife Office), and the Department of Fish and Game (Supervisor, Environmental Services, Department of Fish and Game, 1416 Ninth Street, Sacramento, California 95814; and Staff Zoologist, California Natural Diversity Data Base, Department of Fish and Game, 1220 S Street, Sacramento, California 95814). The report must explicitly address the status and progress of the transplanted and planted elderberry and associated native plants and trees, as well as any failings of the conservation plan and the steps taken to correct them. Any observations of beetles or fresh exit holes must be noted. Copies of original field notes, raw data, and photographs of the conservation area must be included with the report. A vicinity map of the site and maps showing where the individual adult beetles and exit holes were observed must be included. For the elderberry and associated native plants, the survival rate, condition, and size of the plants must be analyzed. Real and likely future threats must be addressed along with suggested remedies and preventative measures (e.g. limiting public access, more frequent removal of invasive non-native vegetation, etc.).

A copy of each monitoring report, along with the original field notes, photographs, correspondence, and all other pertinent material, should be deposited at the California Academy of Sciences (Librarian, California Academy of Sciences, Golden Gate Park, San Francisco, CA 94118) by December 31 of the year that monitoring is done and the report is prepared. The Service's Sacramento Fish and Wildlife Office should be provided with a copy of the receipt from the Academy library acknowledging receipt of the material, or the library catalog number assigned to it.

Access. Biologists and law enforcement personnel from the California Department of Fish and Game and the Service must be given complete access to the project site to monitor transplanting activities. Personnel from both these agencies must be given complete access to the project and the conservation area to monitor the beetle and its habitat in perpetuity.

Success Criteria

A minimum survival rate of at least 60 percent of the elderberry plants and 60 percent of the associated native plants must be maintained throughout the monitoring period. Within one year of discovery that survival has dropped below 60 percent, the applicant must replace failed plantings to bring survival above this level. The Service will make any determination as to the

applicant's replacement responsibilities arising from circumstances beyond its control, such as plants damaged or killed as a result of severe flooding or vandalism.

Service Contact

These guidelines were prepared by the Endangered Species Division of the Service's Sacramento Fish and Wildlife Office. If you have questions regarding these guidelines or to request a copy of the most recent guidelines, telephone (916) 414-6600, or write to:

U.S. Fish and Wildlife Service
Ecological Services
2800 Cottage Way, W-2605
Sacramento, CA 95825

Literature Cited

Barr, C. B. 1991. The distribution, habitat, and status of the valley elderberry longhorn beetle Desmocerus californicus dimorphus. U.S. Fish and Wildlife Service; Sacramento, California.

Holland, R.F. 1986. Preliminary descriptions of the terrestrial natural communities of California. Unpublished Report. State of California, The Resources Agency, Department of Fish and Game, Natural Heritage Division, Sacramento, California.

USFWS. 1980. Listing the valley elderberry longhorn beetle as a threatened species with critical habitat. Federal Register 45:52803-52807.

USFWS. 1984. Recovery plan for the valley elderberry longhorn beetle. U.S. Fish and Wildlife Service, Endangered Species Program; Portland, Oregon.

Using Prescibed Fire as a Vegetation Management Tool
The Nature Conservancy,The California Native Grass Association.
Oct 20-21,1999`

Enviromental Assessment, Putah Creek South Fork Preserve, US Army Assessment of Engineers, Sacramento District, May 1996

Table **1:** **Minimization ratios based on location (riparian vs. non.riparian), stem diameter of affected elderberry plants at ground level, and presence or absence of exit holes.**

Location	Stems (maximum diameter at ground level)	Exit Holes on Shrub Y/N (quantify)[1]	Elderberry Seedling Ratio [2]	Associated Native Plant Ratio [3]
non-riparian	stems > = 1" & = < 3"	No:	1:1	1:1
		Yes:	2:1	2:1
non-riparian	stems > 3" & < 5"	No:	2:1	1: 1
		Yes:	4:1	2:1
non-riparian	s tom s >= 5"	No:	3:1	1:1
		Yes:	6:1	2:1
riparian	stems > = 1" & = < 3"	No:	2:1	1:1
		Yes:	4:1	2:1
riparian	stems > 3" & < 5"	No:	3:1	1:1
		Yes:	6:1	2:1
riparian	stems > = 5"	No:	4:1	1:1
		Yes:	8:1	2:1

[1] All stems measuring one inch or greater in diameter at ground level on a single shrub are considered occupied when exit holes are present anywhere on the shrub.

[2] Ratios in the *Elderberry Seedling Ratio* column correspond to the number of cuttings or seedlings to be planted per elderberry stem (one inch or greater in diameter at ground level) affected by a project.

[3] Ratios in the *Associated Native Plant Ratio* column correspond to the number of associated native species to be planted per elderberry (seedling or cutting) planted.

Figure 1: Range of the Valley Elderberry Longhorn Beetle

EXHIBIT G

STATE OF CALIFORNIA
DEPARTMENT OF FOOD AND AGRICULTURE
DIVISION OF PLANT INDUSTRY

PEST RATINGS OF NOXIOUS WEED SPECIES AND NOXIOUS WEED SEED

PURPOSE

To advise commissioners as to the Department's policy regarding any pest action.

DEFINITIONS

"A" An organism of known economic importance subject to state (or commissioner when acting as a state agent) enforced action involving: eradication, quarantine regulation, containment, rejection, or other holding action.

"B" An organism of known economic importance subject to: eradication, containment, control or other holding action at the discretion of the individual county agricultural commissioner.

or

An organism of known economic importance subject to state endorsed holding action and eradication only when found in a nursery.

"C" An organism subject to no state enforced action outside of nurseries except to retard spread. At the discretion of the commissioner.

GUIDANCE

The district will be allowed to control noxious weeds classified as "A" and identified by the Department of Food and Agriculture as "(an) organism of known economic importance to state (or commissioner when acting as a state agent) enforced action involving: eradication, quarantine regulation, containment, rejection, or other holding action."

The district will be allowed to control noxious weeds classified as "B" and identified by the Department of Food and Agriculture as (an) organism of known economic importance subject to: eradication, containment, control or other holding action at the discretion of the individual county agricultural commissioner.

Before the district eradicates any plant belonging to either class "A" or "B", the plant to be eradicated must be identified as a noxious weed in either class "A" or class "B" by a qualified biologist or a representative of the county agricultural commissioner's office. The district shall notify the Department of Water Resources, Flood Control Project Branch before taking action.

"A" SPECIES

Eradication, containment, rejection or other holding action at the state-county level. Quarantine interceptions to be rejected or treated at any point in the state.

Acaena anserinifolia	biddy biddy
Acaena novae-zelandiae (- *A anserinifolia* in part as used previously and of British and Australian authors.)	biddy biddy
Acaena pallida (- *A anserinifolia* in part as used previously.)	biddy biddy
Achnatherum brachychaetum (- *Stipa brachychaeta*	punagrass
Albagi maurorum (- *A pseudalhagi)*	camelthorn
Alternanthera philoxeroides	alligatorwood
Arctotheca calendula	capeweed, as seed or fertile plants
Carduus acanthoides	plumeless thistle
Carduus nutans	musk thistle
Carthamus leucocaulos	whitestem, distaff thistle
Centaurea diffusa	diffuse knapweed
Centaurea iberica	Iberian starthistle
Centaurea maculosa	spotted knapweed

Centaurea squarrosa	squarrosa knapweed
Chondrilla juncea	skeletonweed
Cirsium ochrocentrum	yellowspine thistle
Cirsium undulatum	wavyleaf thistle
Crupina vulgaris	bearded creeper
Cucumia melo var. dudain	dudain melon
Cuscuta reflexa	giant dodder
Euphorbia esula	leafy spurge
Euphorbia serrata	serrate spurge
Halimodendron halodendron	Russian salttree
Halogeton glomeratus	halogeaton
Helianthus ciliaris	blueweed
Heteropogon contortus	tanglehead
Hydrilla varticillata	hydrilla
Linaria gonistifolia spp. dalmatica (- L. dalmatica)	Dalmatian, toadflax
Onopordum spp.	onopordum thistles
Orobanche ludoviciana var. cooperi (- *O cooperi* (Gray) Heller, as used in Munz', A Flora of Southern California.)	Cooper's broomrape
(- *O multiflora* Nutt., as used in Correll and Johnston's Manual of the Vascular Plants of Texas.)	desert broomrape
Orobanche ramosa	branched, broomrape
Peganum harmala	harmel

Physalis virginians var. sonorae (- *p subglabrata* as used previously.)	smooth groundcherry
Prosopis strombulifera	creeping mesquite
Salsola vermiculata	wormleaf salsola
Salvia virgata (- *S pratensis* as used previously.)	meadow sage
Scolymus hispanicus	golden thistle
Solanum cardiophyllum nightshade	heartleaf
Solanum dimidiatum	Torrey's nightshade
Sonchus arvensis	perennial sowthistle
Sphaerophysa salsula	Austrian peaweed
Striga lutea (- *S asiatica*)	witchweed
Tagetes minuta	wild marigold
Zygophyllum fabago	Syrian beancaper

"B" SPECIES

Eradication, containment, control or other holding action at the discretion of the commissioner.

Acacia paradoxa (- *A armata*)	kangaroothorn
Acrontilon repens (- *Centaurea repens*)	Russian knapweed
Aegilops cylindrica	jointed goatgrass
Aegilops ovata (- *A geniculata* and *A neglecta* in part)	ovate goatgrass
Aegilops triuncialis	barb goatgrass
Aeschynomene rudis	rough jointvetch

Agropyron repens	(see *Elytrigia repens*)
Allium paniculatum	panicled onion
Allium vineals	wild garlic
Ambrosia trifida	giant ragweed
Araujia sericofera	bladderflower
Cardaria chalepensis	lens-podded hoarycress
Cardaria drabs	heart-poddedhoarycress
Cardaria pubescens	globe-podded hoarycress
Carthamus baeticus	smooth distaff thistle
Carthamus lanatus	woolly distaff thistle
Centaurea calcitrapa	Purple starthistle
Centaurea repens	(See *Acroptilon repens*)
Centaurea sulphurea	Sicilian thistle
Chorispora tenella	purple mustard
Cirsium arvense	Canada thistle
Coronopus squamatus	swinecress
Cucumis myriocarpus	paddy melon
Cynara cardunculus	artichoke thistle
Cyperus esculentus	yellow nutsedge
Cyperus rotundus	purple nutsedge
Elytrigia repens (- *Agropyron repens*)	quackgrass
Euphorbia oblongata	oblong spurge
Gaura coccinea	scarlet gaura

Gaura drummondii (- *G odorata*)	scented gaura
Gaura sinuata	wavyleaf gaura
Gypsophila paniculata	baby's breath
Imperata brevifolia	satintail
Isatis tinotoria	dyer's woad
Lepidium latifolium	perennial peppercress
Lythrum salicaria	purple loosetrife
Muhlenbergia schreberi	nimblewill
Nothoscordum inodorum	false garlic
Nymphaea mexicana	banana waterlily
Oryza rufipogon	red rice
Panicum antidotale	blue panicgrass
Physalis viscosa	grape groundcherry
Polygonum cuspidatum	Japanese
Polygonum polystachyum	Himalayan knotweed
Polygonum sachalinonae	giant knotweed
Rorippa austriaca	Austrian fieldcress
Salvia aethiopis	Mediterranean sage
Senecio Jacobaea	tansy ragwort
Senecio squalidus	Oxford ragwort
Sesbania punicea	Scarlet Wisteria, Rattlebox
Setaria faberi	giant foxrail
Solanum carolinense	Carolina horsenettle, knotweed
Solanum elaeagnifolium	white horsenettle

Solanum lanceolatum	lanceleaf nightshade
Solanum marginatum	white-margined nightshade
Symphytum asperum	rough comfrey
Ulex europaeus	gorse
Viscum album	European mistletoe

"C" SPECIES

State endorsed holding action and eradication only when found in a nursery: action to retard spread outside of nurseries at the discretion of the commissioner: reject only when found in a cropseed for planting or at the discretion of the commissioner.

Carduus pycnocephalus	Italian thistle
Carduus tenuiflorus	Italian thistle
Cenchrus echinatus	Southern sandbur
Cenchrus incertus	coast sandbur
Cenchrus longispinus (- *C pauciflorus* as used previously)	mat sandbur
Centaurea solstitialls	yellow starthistle

****

EXHIBIT H

SOUTH FORK PUTAH CREEK
RESTORATION AND MAINTENANCE

FIRE AND LOGISTICS PLAN GUIDE

1 The Site, acreage, location

2 Ownership Status:

3 Sources of Emergency Assistance

Fire: Nearest Fire Dept, phone number

a. Law: Davis Police Dept. and Yolo County Sheriff phone numbers
b. Medical: Addresses and Phone Numbers of Nearest Hospital and Burn Treatment Facility
c. Attorney: phone number

4 Permits and Official Notification
- Burn and Air Quality Permit
- Encroachment Permit: If needed

5 Notifications

- Yolo County Agriculture Commissioner, Phone Number
- Fire Dispatch, Phone Number

6 Unit Description
- Vegetation Type: Grassland
- Fuel Model:
- Unit Area: document percentage of South Fork Putah Creek Restoration site to be burned.
- Percent slope:

7 Management Goals and Objectives:

8 Fire Prescription

- Identify Acceptable Fire Behavior and describe in detail the firing techniques to be used

9 Smoke Management Plan:

- Identify smoke sensitive areas during burn
- Identify critical smoke sensitive areas
- Plot direction of smoke plume

10 Crew Organization

11 Equipment

12 Duration

13 Burn Plan

- Preburn Preparation
- Communication
- Fire Behavior and Weather monitoring
- Ignition plan and Holding plan with Site Map
- Identify on site hazards
- Contingencies:

14. Liability

:

EXHIBIT I

Letter of Transfer to or Acceptance by the Reclamation Board
South Fork Putah Creek Restoration Site

Unattached
To be inserted when the letter is completed.

U.S. Army Corps
of Engineers
Sacramento District

SUPPLEMENT
to the

STANDARD OPERATION AND MAINTENANCE MANUAL

SACRAMENTO RIVER FLOOD CONTROL PROJECT
(Revised 1955)

for the

YOLO BASIN WETLANDS
(VIC FAZIO YOLO WILDLIFE AREA)

PROJECT MODIFICATION WORKS

YOLO COUNTY, CALIFORNIA

"ADDITIONS"

July 2003

Closest project
Levee is
UNIT 119

SUPPLEMENT to the
STANDARD OPERATION AND MAINTENANCE MANUAL
SACRAMENTO RIVER FLOOD CONTROL PROJECT
(Revised 1955)
for the
YOLO BASIN WETLANDS
PROJECT MODIFICATION WORKS
YOLO COUNTY, CALIFORNIA
"ADDITIONS"

TABLE OF CONTENTS

(Additions to appropriate sections of the O&M manual)

SECTION I- INTRODUCTION

1-01 Authority
1-02 Location and Description
1-03 Purpose of the Supplement
1-05 Construction History

SECTION II- LOCAL COOPERATION

2-01 Federal Requirements
2-03 Assurances Provided by Local Sponsor
2-04 Transfer to the Local Sponsor
2-05 Local Sponsor/State of California Responsibilities

SECTION III- GENERAL

3-01 General Rules and Procedures
3-11 Drawings
3-12 Responsibilities of the Refuge Manager (Yolo Basin Wetlands)

SECTION IV- LEVEES
No changes

SECTION V- IRRIGATION AND DRAINAGE STRUCTURES
No changes

SECTION VI.- CHANNELS
No changes

SECTION VII - MISCELLANEOUS FACILITIES
No changes

SECTION VIII - SUGGESTED METHODS OF COMBATING FLOOD CONDITIONS
No changes

SECTION IX - VEGETATION ON MITIGATION AREAS
No changes

SECTION X - PROJECT MODIFICATION WORKS, YOLO BASIN WETLANDS

10-01 General Operation and Maintenance
- a. Permanent Wetlands
- b. Seasonal Wetlands
- c. Native Grassland/Upland
- d. Riparian Woodland
- e. Management and Maintenance of Vegetation
- f. Wildlife Management Time line
- g. Wetlands Operation
  - (1) Flood-Up
  - (2) Draw-Down

10-02 Drainage and Irrigation Structures
- a. Water Control Structures
- b. Pumps
- c. Miscellaneous Facilities (Supply and Drainage Channels, etc.)

10-03 Inspection and Maintenance of Miscellaneous Facilities within the Yolo Basin
- a. Berms
- b. Floodway

10-04 Environmental Management
- a. Habitat Area
- b. Endangered and Threatened Species Protection
  - (1) Giant Garter Snake
  - (2) Swanson's Hawk
  - (3) Salmonids and Sacramento Splittail
- c. Water Quality
- d. Cultural Resources Protection
- e. Recreation
- f. Public Health (Mosquito Control)

TABLES

1 Initial Seed Mix
2 Final Re-seed Mix
3 Wildlife Management Timeline
4 Water Control Structures
5 Pumps
6 Habitat Area
7 Environmental Commitments

SUPPLEMENTAL EXHIBITS

A	Flood Control Regulations (Contained in Standard Manual)	Unattached
A-1	Site and Vicinity Map	1 Sheet
A-2	Code of Federal Regulations	1 Sheet
A-3	Flood-up and Flood-down Map	1 Sheet
B	As Constructed Drawings	Unattached
C	Plates of Suggested Flood Fighting Methods (Contained in Standard Manual)	Unattached
D	Suggested Check List No. 1 - Levee Inspection (Contained in Standard Manual)	Unattached
E	Suggested Check List - Levee, Channels, and Structures	Sheets 1 through 2
F	Letter of Transfer to the Department of Fish and Game	Sheets 1 through 4
F-1	Local Cooperation Agreement.	Sheets 1 through 24
F-2	Assurance Agreement between California Department of Fish and Game, California Department of Water Resources and State Reclamation Board	Sheets 1 through 7
F-3	Memorandum of Understanding, Threatened and Endangered Species	Sheets 1 through 10
F-4	U.S. Fish and Wildlife Service Biological Opinion	Sheets 1 through 12
G	Suggested Annual Report Format	Sheets 1 through 2
H	Slide Gates and Alfalfa Valves	Sheets 1 through 9
I	Pumps	Sheets 1 through 85
	North (180-Acre Unit)	1 through 42
	Central and West	43 through 63
	Northeast and South	64 through 81
	Pump Panels	82 through 85
I-1	Electrical Schematics	1 through 5
I-2	Owner's Manual Portable Davit Cranes	Sheets 1 through 18
I-3	Owner's Manual Spur Gear Hand Winch	Sheets 1 through 19
J	Management of Revegetated Areas	Sheets 1 through 29

SECTION I

INTRODUCTION

1-01. Authority. The improvement covered by this supplemental manual contains wetland restoration work accomplished pursuant to Section 1135 (b) of the Water Resources Development Act of 1986 (Public Law 99-662). Section 1135 (b) authorizes the Corps of Engineers (Corps) to plan and construct modifications to previously constructed projects for improving the quality of the environment in the public interest. The modifications can be to the structures and/or operations of completed water resource projects. Section 1135 authorization also includes areas adjacent to features of the completed project if the project likely contributed to developments that displaced wetlands and wildlife habitats that occurred there in modern historic times.

1-02. Location and Description. The project modification work consists of the construction of approximately 3,400 acres of wildlife habitat, including permanent wetlands, seasonal wetlands, grassland/uplands, and riparian woodland within the Yolo Bypass, a key feature of the Sacramento River Flood Control Project. The project modification works are located in Yolo County, California. A site and vicinity map is shown in **Exhibit A-1**. The project modification work is to be subordinate to the purposes of the existing Corps project with the Sacramento and San Joaquin Drainage District (i.e. the Reclamation Board of the State of California) having a flowage easement over the project lands.

1-03. Purpose of the Supplement. This supplement has been prepared to provide the local sponsor pertinent information for the operation and maintenance of project modification works, general guidelines on wildlife habitat management and to advise them of the details of applicable requirements to assure that the facilities provided by the United States are continuously maintained and operated as necessary to obtain maximum benefits of the project modification works without impacting (no reduction of existing flood carrying capacity) existing flood control protective works. Rules that govern local partners in operating and maintaining projects as a part of protective works are contained in the Code of Federal Regulations **(Exhibit A-2)**.

The organization and format of this supplemental manual is written to be consistent with the Standard Operations and Maintenance Manual for the Sacramento River Flood Control Project (Revised May 1955), and is intended to provide supplemental information that is not presently addressed.

1-05. Construction History. The project modification works described above was accomplished by a Memorandum of Agreement between the U.S. Fish and Wildlife Service and the U.S. Army Corps of Engineers. The Architect/Engineer general contractor was Ducks Unlimited Incorporated. Design and construction was performed by Ducks Unlimited Incorporated under contracts (location, date, contractor):

CA-0058-002 (Northwest Area, August 1995, Ford Construction Company Inc.);
CA-0058-005 (South Area, August 1995, Ford Construction Company Inc.);
CA-0058-006 (Putah Creek Structure, September 1995, Westcon Construction Company);
CA-0058-007 (Power Line Connection, October 1995, Pacific Gas and Electric Company);
CA-0058-008 (Central Pump Station, September 1995, Cooper Crane and Rigging)
CA-0058-008 (North Pump Station, August 1995, Falco Construction);
CA-0058-008 (South Pump Station, October 1995, Anderson Pump Company);
CA-0058-008 (West Pump Station, October 1996, Anderson Pump Company);

CA-0058-008 (Northeast Pump Station, October 1996, Anderson Pump Company);
CA-0058-004 (Central Area, March 1996, Franklin Construction);
CA-0058-003 (Northeast Area, August 1996, Gateway Pacific Contractors);
CA-0058-010 (Causeway/180 Acre Unit, October 1996, Franklin Construction).

Construction began in August 1995 and was completed in October 1997. As-built drawings are referenced in **Exhibit B**. Revegetation work began in October 1994 and was completed in September 1998. As part of the revegetation effort to assist in target species establishment, 2,600 pounds of Crypsis schoenoides seed was collected and processed for aerial seeding of the seasonal wetlands. Aerial seeding was accomplished in the Fall of 1996 at a rate of 1 pound (1,000,000 seeds) per acre.

Two conditions and events significantly affected the grassland establishment for the project.

Grading: Construction grading removed topsoil cover from some of the designated grassland areas, leaving inferior heavy clay peat subsoils as the seeding bed. Grading and existing topography within grasslands created drainage areas too wet for grassland establishment and better suited as seasonal wetlands, i.e., South Unit grassland area.

Flooding: Unfortunate timing of two consecutive years of significant and unusual wet weather events that resulted in flooding of the Bypass, severely impeded and impacted the success of grassland establishment through prolonged inundation, scouring, and sedimentation.

Background: The original native seed mix was modified as new site and soil conditions and information were analyzed after field surveys and completion of construction grading in the grassland areas. A multiple seed mix formula was developed to try and best meet site conditions: general mix, high ground mix, and a wet edge mix (see Table 1 Initial Seed Mix). Initial seeding occurred in the Fall of 1996; delays in construction grading of project, unfortunately, set back drill seeding of most of the grassland areas until late October.

Table 1: Initial Seed Mix (seeded early/late Fall 1996)

General Mix
Hordeum brachyantherum / Meadow Barley
Elymus glaucus / Blue Wildrye
Leymus triticoides / Creeping Wildrye

High Ground Mix
Hordeum brachyantherum / Meadow Barley
Elymus glaucus / Blue Wildrye
Nassella pulchra / Purple Needlegrass
Elymus trachycaulus / Slender Wheatgrass
Wetland Edge Mix
Agrostis exarata / Bent Grass
Deschampsia caespitosa / Tufted Hairgrass
Muhlenbergia rigens / Deer Grass

After the 1996 /1997 flood events, the grassland areas were field checked and evaluated for

germination success. The late seeding time and then immediate and prolonged inundation of the entire project caused significant germination mortality of the grasslands. Areas seeded early and allowed to germinate before inundation had the best success rate; however, significant damage to the project occurred in deposition and scouring of these exposed areas. Germinated seed species consisted almost entirely of Hordeum brachyantherum. All grassland areas were weed controlled and areas prepared (mowed/disced) for a re-seeding in the early fall of 1997. The re-seeding mix was adapted to only using Hordeum brachyantherum with some Elymus glaucus (see Table 2).

Table 2: Final Re-Seed Mix (re-seeded early Fall 1997)

General Seed Mix
Hordeum brachyantherum / Meadow Barley

High Ground Mix (only in a few selected areas)
Elymus glaucus / Blue Wildrye

The flood events of 1997/1998 were not as detrimental to seed germination success. All areas, year old and new, showed initial good signs of germination and growth. A late spring and a flood event in the summer of 1997; however, hit the new and old grasslands hard during their critical growth period. Significant loses of new and year old grassland areas occurred. To provide accurate grassland survival numbers and locations a survey was performed in February 1999 (see maps in **Exhibit J**).

Revegetation work was accomplished under contracts (contract title, date):

DACW05-95-C-0009 (Restoration Planting and Maintenance, Northern Sector (Riparian-Northwest Unit), October 1994;
DAC W05-95-0009 (First Year Monitoring Report for Restoration and Maintenance, Northern Sector, October 1996);
DACW05-95-0009 (Final Monitoring Report for Restoration Planting and Maintenance, Northern Sector, February 1998; and
DACW05-99-P-107 (Grasslands Inventory and Soils Analysis Report, March 1999).

An irrigation system for the Causeway Unit riparian plantings was constructed by Ducks Unlimited Incorporated (general contractor). Causeway riparian woodland plantings was accomplished with volunteer labor. The irrigation system for the Causeway Unit was accomplished under contract: CA-0058-011-001 (Causeway Unit Irrigation System, Aug 1998, Sierra View Landscape).

As-constructed drawings for the irrigation system are shown in **Exhibit J**.

SECTION II

LOCAL COOPERATION

2-01. Federal Requirements. Pursuant to the provisions of section 221 of the Flood Control Act of 1970, Public Law 91-611, as amended, the construction of any water resources project by the Secretary of the Army shall not be commenced until each non-Federal partner has entered into a written agreement to furnish its required cooperation for the project.

2-03. Assurances Provided by Local Sponsor. Necessary assurances of local cooperation for the construction of the project modification works were provided by the local sponsor, State of California Department of Fish and Game on July 1995, (**Exhibit F-1**).

2-04. Transfer to the Local Sponsor. Responsibility for operating and maintaining the project modification works was officially transferred to the State of California Department of Fish and Game by letter in January 1998 (**Exhibit F**).

2-05. State of California Responsibilities. Following construction of the project modification works, the local sponsor shall assume responsibility for maintaining the project area. Responsibility of maintaining the project levees adjacent to the project modification works area shall remain the responsibility of the Reclamation Board. An assurance agreement has been executed between the State of California Department of Fish and Game, the State of California Department of Water Resources, and the State Reclamation Board on responsibilities for maintaining the project modification works (attached for information only, **Exhibit F-2**). A memorandum of understanding among the Reclamation Board, Department of Water Resources, and Department of Fish and Game for State-listed threatened and endangered species consultation is attached as **Exhibit F-3**. The U.S. Fish and Wildlife Biological Opinion is attached as **Exhibit F-4**. Environmental commitments contained in NEPA/CEQA documentation is listed in Section 10-04.b.

SECTION III

GENERAL

3-01. General Rules and Procedures. The project modification works are to be maintained and operated in accordance with the Regulations shown in **Exhibit A** and the interpretations and amplifications as contained in Section X. In general, the project shall be maintained to the same condition as existed on the completion of the contract identified in paragraph 1-05. Code of Federal Regulations, Title 33, Chapter 11, Part 208.10 (2) also requires that the local sponsor designate an official, herein after called the "Refuge Manager", who is responsible for operation and maintenance of the project modification works. The District Engineer, Sacramento District, or his/her authorized representative, the Reclamation Board, and the State of California Department of Water Resources, shall have access at all times to the project works.

3-11. Drawings. The District Engineer will furnish to the local sponsor, the Reclamation Board, and the State of California Department of Water Resource, Division of Flood Management, "As Constructed" drawings of the project modification works at the time an operation and maintenance manual is furnished **(Exhibit B)**.

3-12. Responsibilities of the Refuge Manager (Yolo Basin Wetlands). In line with the provisions of the Flood Control Regulations, the general duties of the Refuge Manager include the following:

a. Personnel: Key personnel shall be trained in order that regular maintenance work may be performed efficiently and to insure that unexpected problems may be handled in an expeditious and orderly manner. The Refuge Manager shall have available the names, addresses, and telephone numbers of maintenance personnel and a reasonable number of substitutes. These key people should, in turn, have similar data on all of the people who will assist them in the discharge of their duties. The organization of key people should include an assistant to act in the place of the Refuge Manager in case of his/her absence or indisposition.

b. Records: The Refuge Manager shall maintain a file of reports, records, and drawings concerning the project modification works, readily available at all times to the District Engineer and the State of California Department of Water Resources.

c. Encroachments: In accordance with the provisions of Flood Control Regulations 208.1 0(a)(4), no encroachment or trespass which will adversely affect the efficient operation or maintenance of the project modification works and the Sacramento River Flood Control Project shall be permitted by the local sponsor on the rights-of-way for the protective facilities. Per California State Water Code, The Reclamation Board, only, is invested with encroachment permitting authority.

d. Inspections: For the sake of uniformity, and to the extent practicable, the dates of annual periodic inspection of the project modification works shall be as follows: 1 March and 1 September. The Refuge Manager shall notify and extend invitation to participate to the State of California Department of Water Resources, Division of Flood Management, 10 days prior to inspections. The suggested checklist shown in **Exhibit E**, should be followed in each inspection to insure that no features of the project modification system are overlooked. Additional guidance on inspections is provided in Section X. Also, a sketch of the project modification works shall accompany the checklist to clarify the findings. The Refuge Manager

shall determine the required composition of the inspection team. A copy of the inspection team's original field notes as recorded on the check list shall be included as an enclosure to the annual report (see paragraph f).

e. Maintenance: Regular maintenance repair measures shall be accomplished during the appropriate season as scheduled by the Refuge Manager. Full responsibility for making the repairs and the methods used is placed on the Refuge Manager. All repairs shall be made in accordance with standard engineering practice, to line and grade and in accordance with details shown on the as constructed drawings for the project modification works, copies of which are included in **Exhibit B**. Maintenance shall be accomplished to insure that the project modification works operate as constructed.

f. Reports: Subsequent to the 1 September inspection and no later than 25 November, the Refuge Manager shall submit an annual report to the District Engineer, Corps of Engineers and the State of California, Department of Water Resources, Division of Flood Management (P.O. Box 942836, Sacramento, CA 94236-0001) covering inspection, maintenance, and operation of the project modification works. This report will provide the following:

(1) The physical conditions of the project modification works as summarized from the logs of inspection.

(2) Summary of flood occurrences and the impact on the Sacramento River Flood Control Project (SRFCP). Flood elevations can be read during flooding from a power pole (elevations printed on pole) adjacent to the 180 Acre or North Unit.

(3) Prosecutions for encroachment or trespass.

(4) Maintenance measures taken; nature, date of construction, and date of removal of temporary repairs; date of permanent repairs.

(5) Fiscal statement of cost and maintenance and operation for the period.

(6) Report summarizing the results of inspection of the vegetation types and coverage with respect to as constructed conditions.

A suggested format for submitting the annual report is attached (**Exhibit G**). Copies of inspection team's field notes as recorded on a suggested check list (**Exhibit E**) shall be made as an enclosure to the annual report. This report will be filed with the District Engineer, Sacramento District, Corps of Engineers.

g. Modifications: Plans for "modifications" to the project modifications works that would constitute a "project" (activities other than required maintenance) will be submitted to the District Engineer, State of California Department of Water Resources and the Reclamation Board for review and approval prior to implementation.

A "modification" to the project would include any new, additional berms or raised roads, additional irrigation/drainage canals, modification to existing irrigation/drainage canals, new alignment of irrigation/drainage canals, additional pump stations, structural modification to the railcar bridge and Putah

Creek Structure(weir and bridge), and any change to operation and maintenance of the seasonal and permanent wetlands habitat that could change the Mannings "n" roughness value for that habitat or habitat acreages.

The project modification works, as constructed, is in compliance with Section 404 (b)(1) guidelines of the Clean Water Act. Any construction changes to the project modification works, including significant maintenance activities, must be reviewed and evaluated by the Refuge Manager for compliance with 404 (b)(1) guidelines. The Refuge Manager will be responsible for obtaining a Section 404 permit, as applicable, and development of appropriate environmental documentation, i.e. water quality certification, NEPA, CEQA, EIS/EIR, EA, etc.

SECTION X

PROJECT MODIFICATION WORKS, YOLO BASIN WETLANDS

10.01. General Operation and Maintenance. All operation and maintenance of the modified project shall be performed by the non-Federal sponsor. General guidance for requirements for operation, inspection, and periodic maintenance of the project modification works are as follows:

Note: All scientific names used for the botanical references are based on THE JEPSON MANUAL (1996 edition).

a. Permanent Wetlands: These areas shall remain flooded to a minimum depth of 3 feet throughout the year. Units shall be periodically rotated out of use for maintenance and rejuvenation. Each unit shall be dried no less frequently than every ten years. The area may remain dry up to, but not exceeding six months, for maintenance. No special irrigation or monitoring is required for short-term establishment of emergent vegetation. Inspections shall be conducted each year to determine extent of vegetation in the impoundments. If the emergent vegetation exceeds fifty percent of the surface area of any impoundment, the excess emergent vegetation shall be removed until the emergent vegetation does not exceed twenty percent of the surface area immediately following the maintenance activities. The method of removal shall be determined by the Refuge Manager and may include mechanical methods (mowing or discing), chemical methods (State approved herbicide) or burning. The emergent vegetation to be managed within these impoundments typically include, hardstem bulrush (Scirpus acutus), sedge (Carex sp.), and cattail (Typha latifolia). Submerged vegetation could primarily include, sago pond weed (Potamogeton pectinatus) and wigeon grass (Ruppia sp.).

The objective Manning's "n" roughness value for this habitat is 0.05. These emergent vegetation species shall be restricted to the permanent wetland area perimeters and surface area percentages to maintain Manning's "n" value.

b. Seasonal Wetlands: These areas provide wintering habitat for waterfowl. The seasonal wetland units are to be flooded to a desired depth up to 18 inches in the fall. Other seasonal wetlands ponds may have areas deeper than 18 inches due to natural topography. The flood-up periods of these areas shall take place from 1 September through 15 October, and remain flooded until draw-down. They are then maintained in this flooded state throughout the winter and are drained in the spring so that swamp timothy (Crypsis schoenoides) can be grown as a preferred food plant for waterfowl. The characteristic vegetation to be managed within seasonal wetland units will be for swamp timothy and emergent vegetation. Emergent vegetation shall not exceed more than 5 percent of the seasonal wetland surface area. No special irrigation or monitoring is required for establishment of swamp timothy and emergent vegetation. For mosquito control purposes, flood-up will be delayed as late as possible to still meet the 15 October flood-up goal. Draw-down will occur between 15 March and 15 May. Drainage and replenishment rates to maintain water quality will be at the discretion of the Refuge Manager. When temperatures are expected to be below freezing, it is recommended that water in seasonal ponds be kept circulating to prevent freeze over.

Swamp timothy requires open, bare mud flats to germinate. In the Upper Sacramento Valley,

germination begins in mud flats between 1 March and 1 April when minimum soil temperatures reach 50 to 55 degrees F for several days and germination continues through the middle of May. Most germination occurs around 1 April. Draw-downs between 1 April and 15 May result in the majority of swamp timothy germination. Draw-downs made earlier in the year are likely to result in establishment of undesirable species. Swamp Timothy is a decumbent annual grass averaging about two to six inches in height. Seed heads emerge from the leaf sheaths starting 1 May. When sites usually dry out quickly, small seed heads ($^1/_4$ to 2 inches) are the norm. Large plants with large seed heads of 1 to 2 inches occur on sites with longer periods of wet soil or late rains. Prolonged flooding for one week or more can drown out seedlings. A flash irrigation one month after germination (in May to June), of 1 to 3 inches, to be applied and removed within 3 days would encourage a thick stand with large seed heads. The Sacramento-Yolo County Mosquito and Vector Control District shall be notified no later than two calendar days prior to a flash irrigation during May-June of any year. Irrigation in June would probably encourage other species such as water grass (Echinochloa crugalli) and sprangle-top (Leptochloa fascicularis).

The objective Manning's "n" value for this type of vegetation is 0.04. To maintain this objective roughness value, not less than 95 percent of the seasonal wetlands area may include low seasonal cover, to include swamp timothy, watergrass, sprangle-top, etc. The surface area coverage shall be determined by field judgement of the Refuge Manager or representatives of the Refuge Manager.

c. Grassland/Upland: These areas will provide cover, wildlife forage, and nesting environs within the wildlife area. These areas were located within each unit to serve also as buffer zones between adjacent agricultural lands. The target vegetation to be managed within these units shall be a diverse mixture of native grasses, grass, and forbs.

Inspections: Inspections shall be conducted each year to determine the extent and condition of the grassland vegetation in each of the units. Management programs shall be adapted to maintain the surviving meadow barley stands and other appropriate species.

The objective Manning's "n" roughness values for this type is 0.035. To maintain this objective roughness value, the grassland area shall be inspected annually for invasion of woody vegetation and or marsh tules. All woody vegetation shall be removed.

d. Riparian Woodland: Two areas of the project area are permitted riparian vegetation, the Northwest Unit (7.2 acres) and the Causeway Unit (25 acres). These areas provide nesting, resting, and foraging areas for numerous passerine birds, raptors, and other birds. These riparian habitats will provide essential food resources for a wide array of wildlife within the riparian ecosystem. Inspections shall be conducted each year to determine the extent of vegetation in the units. The inspection shall estimate the clear distance between trees and/or stands, estimate average diameters, condition of underbrush (percentage of area, height, type), total acreage vegetated, and irrigation regimes (date, number of days, irrigation rate). The characteristic trees and shrubs to be managed within these units could include:

Trees/Tree Shrubs:

- Box elder (Acer Negundo californicum)
- White alder (Alnus rhombifolia)
- California sycamore (Platanus racemosa)
- Fremont cottonwood (Populus fremontii)
- Arroyo willow (Salix lasiolepsis)

Red willow (Salix laevigata)
Yellow willow (Salix lasiandra)
Sandbar willow (Salix hindsiana)
Valley oak (Quercus lobata)
Oregon ash (Fraxinus latifolia)

Shrubs and vines:
Mule-fat (Baccharis viminea)
Coyote bush (Baccharis pilularis consanguinea)
Button bush (Cephalanthus occidentalis)
Clematis (Clematis ligusticifolia)
California wildrose (Rosa californica)
California wild grape (Vitis californica).

The objective Manning's "n" roughness value for this type is 0.045. The riparian area shall be allowed to naturally progress or evolve to a riparian forest habitat type.

e. Management and Maintenance of Vegetation: Refer to **Exhibit J.**

f. Table 3: Wildlife Management Time Line:

January	Seasonal wetlands inundated End of hunting season High public use
February	Seasonal wetlands inundated High public use
March	Notify SYMVCD of draw-down dates (1 Mar) Conduct inspections/vegetation survey (15 Mar) Begin draw-down of seasonal wetlands Conduct Swainson's Hawk breeding survey High public use
April	Swamp timothy begins to germinate
May	Conduct Giant Garter Snake survey (15 May) Draw-down complete Vegetation monitoring and maintenance activities begin Flash irrigation of swamp timothy, if needed. Notify SYMVCD in advance if irrigated.
June	Continue maintenance activities Flash irrigation of swamp timothy, if needed. Notify SYMVCD in advance if irrigated.
July	Conduct Giant Garter Snake Survey Continue maintenance activities

August	Continue maintenance activities Notify SYMVCD of flood-up schedule
September	(1 Sep) Flood-up begins (1 Sep) Conduct inspections/vegetation survey Conduct Giant Garter Snake Survey Waterfowl begin to arrive
October	(15 Oct) Flood-up completed Hunting season begins High public use
November	Seasonal wetlands inundated Peak controlled public use
December	Seasonal wetlands inundated

g. Wetlands Operation:

(1) Flood-Up: Flood-up of seasonal wetlands shall occur in the fall (September through March) and in early summer (May to June) for flash irrigation. Permanent ponds would be inundated all year, except during maintenance. All procedures describing flood-up of the project modification assume the large flapper gate on the pipe through the west levee approximately 1/3 mile from the Central Canal is closed. This pipe diverts water to the Mace Irrigation District west of the Bypass. Flood-up of the Northwest, West, Central and South wetland areas would be accomplished by lifting water at the Central pump station into the Cross Canal and opening slide gates along the Cross Canal that supply these units. The Central pump station would serve as the "first" lift of water to the channel supplying the 180 (North) Acre Unit. The North pump station supplies the 180 (North) Acre Unit and provides summer make-up/back-up water to the Northwest Unit. Flood-up of the Northeast Unit is accomplished by lifting water from the "toe drain" on east side of Bypass at the Northeast pump station into the North Supply Canal and channel on west side of the Northeast Unit. The Causeway Unit permanent ponds are supplied via the North Supply Canal and canal on the east side of the 180 (North) Acre Unit with a supply pipeline (18-inch PVC) under Interstate 80. The South pump station provides summer make-up and back-up water to the Central and South Units. It is recommended that at least 1.0 feet of freeboard be maintained in the seasonal and permanent wetland ponds to reduce erosion. Depth at ponds shall be maintained at a minimum 3 feet during the summer and without fluctuations except during winter. A flow diagram of the flood-up sequence and direction of flow is shown in **Exhibit A-3**.

Causeway Unit: Flood-up of the Causeway permanent ponds is accomplished by opening both slide gates at the north end of canal on east side of the 180 (North) Acre Unit south of Interstate 80 and north of Interstate 80. Gate NO3 would have to be opened (flash boards lifted) and a private steel riser boarded up to allow water to flow north in the canal to the Causeway Unit.

180 (North) Acre Unit: Flood-up of the seasonal pond is first accomplished by pumping water from the North pump station at the south end of the Unit. Water is discharged through an 18-inch-

diameter pipe and alfalfa valve at the south end of the unit.

Northwest Unit: Flood-up of the Northwest Unit would begin by flooding the NWS1 seasonal wetland pond first by opening slide gates (NWT1 and T2) along the Cross Canal. After desired water level of elevation (at least 1.0 ft of freeboard below top of berm) is attained in NWS1, water will flow freely through water control structures NW3 and NW6 through the berm separating seasonal ponds NWS1 and NWS2, and slide gate NWT3 on the Cross Canal can be opened, allowing water to flow into the NWS2 seasonal wetland pond (at least 1.0 ft of freeboard below top of east berm). The permanent wetland pond (NWP1) is flooded from the south by lifting boards on gate NW7. There is a ditch between gates NWT3 and NW7 on the southeast side of the Unit to convey water from the Cross Canal to NWP1.

West Unit: Flood-up of the West Unit is attained two ways. When the Putah Creek Bridge Structure (weir) is gated, seasonal wetland (WES1) is flooded by lifting boards on gate C5 through the Cross Canal and opening slide gates C3 and C4 on the north side. When the Putah Creek Bridge Structure is ungated, gate C5 is closed and the water is raised in the Cross Canal by the Central Pump Station.

Central Unit: Flood-up of the Central Unit is attained when the Putah Creek Bridge Structure is gated and through the Central Pump Station. Water can be raised in the Cross Canal by the Central Pump Station and opening gate C6 and flooding seasonal pond CES1 first. When the Putah Creek Bridge Structure is gated, Gate C2 at the weir can be opened to fill the South Central Canal at the south end of the unit. Slide gate C14 can be opened to fill seasonal pond CES5 at this time. Seasonal pond CES2 can be flooded by opening slide gates C12 and C16 on the South Central Canal on the south end of the Unit. CES1 and CES5 can be flooded by allowing flow through gates C9 and C10 through the berm separating CES1 and CES5 from CES2. Flood-up of the seasonal pond CES4 is accomplished by opening slide gates C24, C11, and C27 along the South Central Canal on the south end of the Unit, and C20 at the northeast end of permanent pond CEP1. The South Pump Station can be used to fill the South Central Canal on the south end of the Central Unit and to fill seasonal pond CEP2 via an alfalfa valve (to be used for back-up water for the Central Unit and summer make-up water to permanent ponds CEP1 and CEP2). CES3 is the last seasonal pond to be filled by allowing flow through gate C30 through the berm separating CES4 and CES3, and closing C32 and C33 on the Cross Canal. CEP1 can be flooded three ways: from the south by opening gate C17 along the canal on the south end of the Unit or by opening gate C25 separating the pond from CES4 or by opening gates C15 and C19 (gates C21, C20, and C22 must be closed and CES2 seasonal pond must be filled to at least 8.0 feet MSL). Permanent pond CEP2 is filled by opening gate C31 through the berm separating CES3 from the pond. It also can be flooded using a low lift pump, opening gate C29 along the South Central Canal and opening C31.

Seasonal pond CES5 can be flooded to elevation 12.5 ft MSL by opening gate C-5 on the Cross Canal and filling the canal on the west side of the Unit and raising water elevation at the Putah Creek Bridge Structure (weir).

South Unit: The South Unit is flooded by opening gate C1 at the Putah Creek Bridge Structure weir, closing all gates on the south end of the unit and allowing water into the South Canal located south of the Putah Creek Canal (north end of the South Unit). Gate S01 must be opened on the canal to allow water to flow east along the canal. Gates S11, S02, S03, and S05 can be opened to fill seasonal pond SOS1. To fill seasonal pond SOS2, flow is allowed through gates S04 and S14 in the berm separating SOS1 and SOS2, and gates S06 and S09 are opened on the canal at the north end of the Unit. Filling seasonal pond SOS3 is accomplished by allowing flow through gates S17 and S08 in the berm separating SOS2 and

SOS3, and gate S10 on the canal at the north end of the Unit. The South Pump Station can be used to fill SOS3, SOS2, and SOS1 via an alfalfa valve and to fill the South Canal at the north end of the South Unit (back-up supply to South Unit and for summer make-up water to permanent pond SOP1). The permanent pond SOP1 is filled by allowing overflow through gates S12 and S18 or by lowering boards on gates S12 and S18 in the berm separating SOS3 and SOP1, and S13 in the Putah Creek Canal at the north end of the Unit (only if water elevation in the Canal is sufficiently high).

Northeast Unit: Flood-up of the Northeast Unit is accomplished by first flooding seasonal pond NES2 by opening gate NE5 on the North Supply Canal and boarding the steel riser on the west end of the North Supply Canal. Seasonal pond NES1 is flooded by opening slide gates NE1 and NE2 on the North Supply Canal (gates NE6 and NE15 should be closed). Seasonal pond NES3 is flooded next by lifting boards at gate NE15 and NE16, opening slide gate NE3, and allowing flow through NE6. Boards on gate NE17, NE19, and NE7 should be closed to allow water elevation to build up in NES3. Seasonal pond NES4 is flooded last by allowing flow through gates NE19 and NE18. Permanent pond NEP1 can be flooded by opening gate NE4 on the North Supply Canal and closing gate NE8. Permanent pond NEP2 is flooded by allowing flow over gate NE8 or lowering boards at NE8 at the south end of NEP1 and lowering gate NE9 at the north end of NEP2. Permanent pond NEP3 is flooded by allowing flow over gate NE21 or lowering boards at gate NE21 at the south end of NEP2.

(2) Draw-Down: Draw-down would occur in the spring and after flash irrigation in the summer. Draw-down of all seasonal and permanent ponds would be accomplished through gravity drainage through water control structures, with the exception of the West Unit, where drainage is assisted by the West pump station on the northeast corner of the Unit and the 180 (North) Acre Unit, where drainage at the south end can be assisted with the portable Crissafulli pump. All water levels in adjacent supply and drainage canals must be lowered below grade elevations of ponds for drainage to occur efficiently.

Causeway Unit: Draw-down of the permanent ponds is accomplished by opening a slide gate separating the two ponds and the slide gates at each end of the 18-inch supply pipeline under Highway 80.

180 (North) Acre Unit: Drainage is accomplished by opening gates (lifting flashboards) at gates NO2 and NO3 to drain into the canal east of the Unit, which empties into the North Supply Canal. An option is to use a portable Crissafulli diesel pump at the south end of the Unit.

Northwest Unit: Drainage of seasonal ponds NWS2 and NWS1 is accomplished by fully opening gates NW1, NW4 and NW7, and gates NW3 and NW6 through the berm separating the two seasonal ponds. Gates NWT1, NWT2, NW13 and NWT3 on the south end can also be opened, but will only drain NWS2 and NWS1 to elevation 10.7 ft MSL. Drainage of permanent pond NWP1 is accomplished by opening gate NW5 on the Cross Canal.

West Unit: Drainage is accomplished by opening gates C4, C3, C8, C38, and C37. Gates C3, C4, and C37 can be used to partially drain the Unit between elevation 10 to 11.0 ft MSL. C8 can drain the Unit down to elevation 9.5 to 10.0 ft MSL. The West pump station can also be used to facilitate drainage of the Unit. Gate C5 can be opened on the Cross Canal to facilitate drainage from the canal on the east side of the Unit. Drainage from this canal can be accomplished into Putah Creek to the south if the elevation of the creek is sufficiently low.

Central Unit: Drainage is accomplished by fully opening gates C9, C10, C30, C15, and C21

through berms separating seasonal ponds and gates C16, C22, C32 and C33 on the Cross Canal. Gates C14, C12, C16, C17, C23, C24, C11, and C27 are opened to allow drainage into the South Central Canal on the south end of the Unit. Drainage of the South Central Canal into the Putah Creek Canal is accomplished by opening gates C18 and C28. Drainage of the permanent pond CEP1 is accomplished by opening gate C19 at the north end of the pond and C22 on the Cross Canal. Drainage of CEP2 is accomplished by opening gates C35 and C34 on the Tule Canal on the east side of the Unit.

South Unit: Drainage of the seasonal ponds in the Unit can be accomplished by fully opening gates S14, S04, S17, and S08 in the berms separating the seasonal ponds and gates S02, S03, S06, S09, and S10 on the South Canal. Gates S15, S16, and S19 can also be opened on the south end of the Unit to drain the seasonal wetlands. Permanent pond SOP1 is completely drained by opening gate S13 at the north end of the pond to drain into Putah Creek Canal. Drainage of the South Canal is accomplished by opening gate S07, which drains into Putah Creek Canal.

Northeast Unit: Drainage of the seasonal wetlands can be accomplished by opening gates NE6, NE15, NE 16, NE18, NE19, NE7, NE11, and NE12 in the berms separating the seasonal ponds. Seasonal pond NES2 is drained by lowering boards on NE11 and NE5, and NE12. Drainage into the Tule Canal would be through gate NE12. Seasonal pond NES1 is drained by lowering boards on NE15, and d opening slide gates NE1, NE2, and NE14. Seasonal pond NES3 is drained by opening slide gates NE3 and NE14, lowering boards on NE7, NE19, and NE16. Seasonal pond NES4 is drained by lowering boards on NE24, NE19, and NE20 (NE20 drains into permanent pond NEP2 and can only lower NES4 water elevation to 9.0 ft MSL if the ponds are full) and opening slide gate NE14. Gates NE17 and NE18 can also be used to partially drain seasonal pond NES4. If Gate NE20 is opened to drain NES4 into the permanent pond NEP2, then gate NE22, which drains into the Tule Canal, must be opened to prevent overtopping of NEP2. Permanent pond NEP1 is drained by lowering boards on gates NE8 at the south end of the pond and NE12, which drains into the Tule Canal. Permanent pond NEP2 is drained by lowering boards on gates NE9, NE12, NE22 (drains into Tule Canal) and NE21 (only if permanent pond NEP3 is being drained also). Permanent pond NEP3 is drained by lowering boards on gate NE25 that drains into the Tule Canal and NE21 (only if permanent pond NEP2 is being drained also).

10-02. Drainage and Irrigation Structures.

a. Water Control Structures: Water control structures used to irrigate and drain the wetlands through berms are listed in **Table 4**. Irrigation and drainage of ponds is accomplished through water control structures through berms separating ponds and supply/drainage canals. Alfalfa valves are used in a few locations to discharge water from pump stations (North and Southeast Pump Stations). The water control structures consist of polyethylene pipe and prefabricated concrete box risers at the inlet controlling headwater elevations of each pond. The concrete box risers are outfitted with either flash board gates or slide (screw) gates. Flash board gates consist of metal flash board frames to accommodate two rows of 2-inch by 4-inch wood "flash" boards. The majority of gates are flash board type. Most of the risers adjacent to supply or drainage canals and are fitted with slide gates (Waterman C-10 and CL-10 models). Most of the risers between seasonal and permanent ponds are equipped with flash board gates. Manufacturer's catalogue cuts of slide gates and alfalfa valves are included in **Appendix H**. The top elevation of most box risers should not exceed the top elevation of adjacent berms to prevent overtopping of berms. In cases where the risers are extended to elevations above berms, precautions should be taken to ensure flash boards are not set above the berm elevations. This can be accomplished by marking (with paint) the elevation of the adjacent berm on the riser.

Adequate measures shall be taken to insure that inlet and outlet channels are kept open and that trash, sediment, drift or debris is not allowed to accumulate near drainage structures. Flap gates and manually operated gates and valves on drainage structures shall be examined, oiled and trial operated at least once every 90 days. Periodic inspections shall be made by the Refuge Manager to be certain that:

(1) Pipes, gates, operating mechanisms, and head walls are in good condition;
(2) Inlet and outlet channels are open;
(3) Care is being exercised to prevent accumulation of sediment, trash and debris near the structures; and
(4) Erosion around the inlets and outlets of the structures is prevented and if required, repaired.

Immediate steps will be taken to repair damage, replace missing or broken parts, or remedy adverse conditions disclosed by such inspections. At each inspection the following items, if applicable, shall be particularly noted:

(1) Sediment deposition, debris or other obstructions to flow.
(2) Condition of pipes and gates.
(3) Damage or settlement of pipe.
(4) Condition of concrete-cracks, spalls, erosion

All eroded concrete shall be repaired as soon as erosion reaches a depth of four inches or any reinforcing steel is exposed. For this purpose it is recommended that the repair be made by thoroughly clearing the surface by sand blasting and building up the concrete to its original section with pneumatically-placed Portland cement mortar.

The inlets and outlets of the drainage structures could inundate frequently during the flood season. Therefore, they should be inspected at the first opportunity to make certain that refuse or debris has not prevented the structures from functioning properly.

Table 4
Water Control Structures

YOLO SOUTH UNIT WATER CONTROL STRUCTURES

WC #	Pipe Type	# Pipes	Pipe Length	Pipe Invert	WC Top Elevation	Extension Size	Gate/FB Type
SO1a	30" HDPE	2	35	7.50	10.90		F
SO1b	30" HDPE		35	7.57	10.97		F
SO2	30" HDPE	1	40	7.46	10.86		G
SO3	30" HDPE	1	40	8.50	11.90		G
SO4	30" HDPE	1	40	7.03	10.43	1	F
SO5	30" HDPE	1	40	6.80	10.20		G
SO6	30" HDPE	1	30	7.00	10.40		G
SO7a	30" HDPE	2	45	6.69	10.09		F
SO7b	30" HDPE		45	6.55	9.95		F
SO8	30" HDPE	1	40	6.72	10.12		F
SO9	30" HDPE	1	50	8.50	11.90		G
SO10a	30" HDPE	2	30	7.56	10.96		F
SO10b	30" HDPE		30	7.56	10.96		F
SO11	30" HDPE	1	51	7.95	11.35		F
SO12a	30" HDPE	2	55	5.56	8.96	1	F
SO12b	30" HDPE		55	5.39	8.79	1	F
SO13a	30" HDPE	3	60	3.53	6.93	1	F
SO13b	30" HDPE		60	3.55	6.95	1	F
SO13c	30" HDPE		60	3.74	7.14	1	F
SO14	30" HDPE	1	40	6.07	9.47	1	F
SO15a	30" HDPE	2	35	6.60	10.00		F
SO15b	30" HDPE		35	6.60	10.00		F
SO16a	30" HDPE	2	26	6.04	9.44		F
SO16b	30" HDPE		26	6.04	9.44		F
SO17	30" HDPE	1	53	5.65	9.05	1	F
SO18	30" HDPE	1	40	5.81	9.21	1	F
SO19a	30" HDPE	2	31	5.35	8.75	1	F
SO19b	30" HDPE		31	5.30	8.70	1	F
drain pipe	30" HDPE	1	25	OG			
TOTALS:		# pipes	pipe length		wc total	1' ext	gates
	30" HDPE	29	1183		28	11	5
						2' ext	fishbrds
						0	23

Flashboards required (South Unit)				
structure	#	#/boards	# sets	total
wc w/ 1' ext	11	11	2	242
wc w/ 2' ext	0	13	2	0
wc w/o ext	12	9	2	216
				458

ABBREVIATIONS

HDPE	High Density Polyethylene
WC#	Water Control (Structure) Number
F	Flash Boards
G	Slide (Screw) Gate
OG	On Ground (Ground Elevation)

Table 4 -Continued
Water Control Structures

YOLO CENTRAL UNIT WATER CONTROL STRUCTURES

WC #	Pipe Type	# Pipes	Pipe Length	Pipe Invert	WC Top Elevation	Extension Size	Gate/FB Type
C1a	30" HDPE	2	85	9.13	12.36		G
C1b	30" HDPE		95	9.01	12.47		G
C2a	30" HDPE	2	130	9.27	12.54		G
C2b	30" HDPE		119	9.09	12.38		G
C3a	30" HDPE	2	40	12.12	15.27		G
C3b	30" HDPE		40	12.14	15.26		G
C4	30" HDPE	1	45	10.74	14.18		G
C5a	30" HDPE	4	25	11.25	14.65	2	F
C5b	30" HDPE		25	11.30	14.70	2	F
C5c	30" HDPE		25	11.30	14.70	2	F
C5d	30" HDPE		25	11.27	14.67	2	F
C6a	30" CMP	1	357	10.11	13.51	2	F
C6b	30" CMP		(inc.)	NA			G
C6c	30" CMP		(inc.)	NA			G
C6d	30" CMP		(inc.)	NA			G
C7	24" HDPE	1	35	10.60	14.01		G
C8a	30" HDPE	2	40	9.92	13.32		F
C8b	30" HDPE		40	9.97	13.37		F
C9	30" HDPE	1	40	8.64	12.04		F
C10	24" HDPE	1	40	9.34	12.74		F
C11	24" HDPE	1	30	7.74	11.14		G
C12	30" HDPE	1	40	8.60	12.00		G
C13a	30" HDPE	2	35	8.55	11.95		F
C13b	30" HDPE		35	8.67	12.07		F
C14	30" HDPE	1	40	8.94	12.34		G
C15a	30" HDPE	2	35	7.58	10.98	1	F
C15b	30" HDPE		36	7.81	11.21	1	F
C16a	30" HDPE	2	40	8.65	12.05		F
C16b	30" HDPE		40	8.64	12.04		F
C17	24" HDPE	1	35	8.11	11.51		G
C18a	30" HDPE	2	40	8.07	11.47		F
C18b	30" HDPE		40	8.10	11.50		F
C19	24" HDPE	1	40	5.59	8.99	2	F
C20	30" HDPE	1	40	7.24	10.64		F
C21a	30" HDPE	2	40	7.95	11.35		G
C21b	30" HDPE		40	8.00	11.30		G
C22a	30" HDPE	2	40	5.00	8.40	2	F

ABBREVIATIONS

HDPE	High Density Polyethylene
WC#	Water Control (Structure) Number
F	Flash Boards
G	Slide (Screw) Gate
OG	On Ground (Ground Elevation)

Table 4 - Continued
Water Control Structures

YOLO CENTRAL UNIT WATER CONTROL STRUCTURES

WC #	Pipe Type	# Pipes	Pipe Length	Pipe Invert	WC Top Elevation	Extension Size	Gate/FB Type
C22b	30" HDPE		40	5.08	8.48	2	F
C23	30" HDPE	1	40	8.08	11.48		G
C24a	30" HDPE	2	35	8.08	11.48		F
C24b	30" HDPE		35	8.07	11.47		F
C25	24" HDPE	1	36	7.36	10.76		F
C26(16north)	30" HDPE	2	60	7.15	10.55		F
C26(16north)	30" HDPE		60	7.22	10.62		F
C27	30" HDPE	1	30	7.66	11.06		G
C28a	30" HDPE	2	45	7.03	10.43		F
C28b	30" HDPE		45	7.03	10.43		F
C29a	30" HDPE	2	45	7.57	10.97		G
C29b	30" HDPE		46	7.34	10.74		G
C30	30" HDPE	1	45	7.30	10.70		F
C31	30" HDPE	1	31	6.10	9.50		F
C32a	30" HDPE	2	51	5.18	8.58	1	F
C32b	30" HDPE		51	5.33	8.73	1	F
C33a	30" HDPE	2	45	5.31	8.71	1	F
C33b	30" HDPE		45	5.56	8.96	1	F
C34	30" HDPE	1	51	3.78	7.18		F
C35	30" HDPE	1	40	3.38	6.78		F
C36	30" HDPE	1	40	9.17	14.57	2	F
C37	24" HDPE	1	35	11.00	16.40	2	F
C38	24" HDPE	1	36	10.33	15.22	2	F
clvrt @ pb a	30" HDPE	2	30	7.50			
clvrt @ pb b	30" HDPE		30	7.46			
pumpline	24" PVC	2	3520	NA			
cmp @ pb	36" CMP	1	225	4.77			
TOTALS:		# pipes	pipe length		wc total	1' ext	gates
	30" HDPE	50	2255		57	6	21
	24" HDPE	8	287			2' ext	fishbrds
	30" CMP	1	357			11	39
	36" CMP	1	225				
	24" PVC	2	3520				

Flashboards required (Central Unit)				
structure	#	#/boards	# sets	total
wc w/ 1' ext	6	11	2	132
wc w/ 2' ext	11	13	2	286
wc w/o ext	22	9	2	396
Grand Total				814

ABBREVIATIONS

HDPE	High Density Polyethylene
WC#	Water Control (Structure) Number
F	Flash Boards
G	Slide (Screw) Gate
OG	On Ground (Ground Elevation)

Table 4 - Continued
Water Control Structures

YOLO NORTH EAST UNIT WATER CONTROL STRUCTURES

WC #	Pipe Type	# Pipes	Pipe Length	Pipe Invert	WC Top Elevation	Extension Size	Gate/FB Type
NE1a	30" HDPE	2	44	8.24	11.64		G
NE1b	30" HDPE		44	8.23	11.63		G
NE2	30" HDPE	1	37	8.09	11.49		G
NE3a	30" HDPE	2	38	8.40	11.80		G
NE3b	30" HDPE		38	8.41	11.81		G
NE4	30" HDPE	1	30	7.92	11.32		G
NE5a	30" HDPE	2	40	7.84	11.24		G
NE5b	30" HDPE		40	7.78	11.18		G
NE6a	30" HDPE	2	30	7.00	10.40		F
NE6b	30" HDPE		30	7.00	10.40		F
NE7a	30" HDPE	2	30	6.87	10.24		F
NE7b	30" HDPE		30	6.87	10.20		F
NE8	30" HDPE	1	27	4.96	10.30	2	F
NE9	30" HDPE	1	25	6.44	10.78		F
NE11a	30" HDPE	2	26	5.38	9.84	1	F
NE11b	30" HDPE		26	5.40	9.80	1	F
NE12a	30" HDPE	2	45	4.37	9.90	2	F
NE12b	30" HDPE		49	4.40	9.90	2	F
NE14a	30" HDPE	2	31	6.00	9.40		G
NE14b	30" HDPE		31	6.11	9.51		G
NE15a	30" HDPE	2	25	7.06	10.32		F
NE15b	30" HDPE		25	7.08	10.34		F
NE16a	30" HDPE	2	24	6.66	9.95		F
NE16b	30" HDPE		24	6.43	9.90		F
NE17a	30" HDPE	2	40	7.92	11.38		F
NE17b	30" HDPE		40	8.03	11.38		F
NE18a	30" HDPE	2	35	5.35	10.63	2	F
NE18b	30" HDPE		35	5.26	10.44	2	F
NE19	30" HDPE	1	40	6.61	10.03		F
NE20a	30" HDPE	2	80	3.99	9.38	2	F
NE20b	30" HDPE		80	3.91	9.34	2	F
NE21	30" HDPE	1	24	4.99	8.20		F
NE22a	30" HDPE	2	50	4.96	8.26		F
NE22b	30" HDPE		50	5.02	8.37		F
NE24a	30" HDPE	2	44	6.23	9.63		F
NE24b	30" HDPE		44	6.15	9.55		F

ABBREVIATIONS

HDPE	High Density Polyethylene
WC#	Water Control (Structure) Number
F	Flash Boards
G	Slide (Screw) Gate
OG	On Ground (Ground Elevation)

Table 4 - Continued
Water Control Structures

YOLO NORTH EAST UNIT WATER CONTROL STRUCTURES

WC #	Pipe Type	# Pipes	Pipe Length	Pipe Invert	WC Top Elevation	Extension Size	Gate/FB Type
NE25a	30" HDPE	2	40	4.00	8.40	1	F
NE25b	30" HDPE		40	3.99	8.30	1	F
Clvrt	18" CMP	2	40	OG			
Clvrt	18" CMP		40	OG			
Clvrt	30" HDPE	1	40	OG			
TOTALS:		# pipes	pipe length		wc total	1' ext	gates
	30" HDPE	39	1471		38	4	10
	18" CMP	2	80			2' ext	fishbrds
						7	28

Flashboards required (North East Unit)				
structure	#	#/boards	# sets	total
wc w/ 1' ext	4	11	2	88
wc w/ 2' ext	7	13	2	182
wc w/o ext	17	9	2	306
Grand Total				576

YOLO NORTH UNIT WATER CONTROL STRUCTURES

WC #	Pipe Type	# Pipes	Pipe Length	Pipe Invert	WC Top Elevation	Extension Size	Gate/FB Type
NO1	30" HDPE	1	40	11.76	15.01		F
NO2	30" HDPE	1	40	10.50	13.86		F
NO3	30" HDPE	1	60	6.95	11.31	1	F
clvrt	24" HDPE	1	40	7.00			
causeway	18" PVC	1	230	8.00			
TOTALS:		# pipes	pipe length		wc total	1' ext	gates
	30" HDPE	3	140		3	1	0
	24" HDPE	1	40				fishbrds
	18" PVC	1	230				3

Flashboards required (North Unit)				
structure	#	#/boards	# sets	total
wc w/ 1' ext	1	11	2	22
wc w/ 2' ext	0	13	2	0
wc w/o ext	2	9	2	36
				58

ABBREVIATIONS

HDPE	High Density Polyethylene
WC#	Water Control (Structure) Number
F	Flash Boards
G	Slide (Screw) Gate
OG	On Ground (Ground Elevation)

Table 4 - Continued
Water Control Structures

YOLO NORTH WEST UNIT WATER CONTROL STRUCTURES

WC #	Pipe Type	# Pipes	Pipe Length	Pipe Invert	WC Top Elevation	Extension Size	Gate/FB Type
NW1	30" HDPE	1	100	10.40	13.80		F
NW2a	30" HDPE	3	40	7.00	12.40	2	F
NW2b	30" HDPE		40	7.10	12.50	2	F
NW2c	30" HDPE		40	6.90	12.30	2	F
NW3	30" HDPE	1	30	9.40	13.80	1	F
NW4	30" HDPE	1	100	6.70	12.10	2	F
NW5	30" HDPE	1	40	7.20	10.60		F
NW6	24" HDPE	1	30	10.60	14.00		F
NW7	30" HDPE	1	30	8.50	11.90		F
NW8	24" HDPE	1	40	9.20	14.60	2	F
NW9a	30" HDPE	2	40	6.60	10.00		F
NW9b	30" HDPE		40	6.70	10.10		F
NW10a	30" HDPE	2	40	6.80	12.20	2	F
NW10b	30" HDPE		40	6.70	12.10	2	F
NW11	30" HDPE	1	30	9.10	12.50		F
NW12a	30" HDPE	2	40	7.60	11.00		F
NW12b	30" HDPE		40	7.60	11.00		F
NW13	30" HDPE	1	40	10.40	13.80		F
NWT1	30" HDPE	1	40		na		G
NWT2	30" HDPE	1	40		na		G
NWT3a	30" HDPE	2	40		na		G
NWT3b	30" HDPE		40		na		G
TOTALS:		# pipes	pipe length		wc total	1' ext	gates
30" HDPE		20	890		22	1	4
24" HDPE		2	70			2' ext	fishbrds
						7	18

Flashboards required (NorthWest Unit)				
structure	#	#/boards	# sets	total
wc w/ 1' ext	1	11	2	22
wc w/ 2' ext	7	13	2	182
wc w/o ext	10	9	2	180
				384

ABBREVIATIONS

HDPE	High Density Polyethylene
WC#	Water Control (Structure) Number
F	Flash Boards
G	Slide (Screw) Gate
OG	On Ground (Ground Elevation)

Table 4 - Continued
Water Control Structures

Pond WES1

LEVEE	14.00
DESIGN WS	13.00
MAX WS	13.32

	WC#	Structure TE	Pipe IE	Structure Type
Inflow	C3a	15.27	12.12	G
	C3b	15.26	12.14	G
	C4	14.18	10.74	G
	C37	16.40	11.00	F
Outflow	C8a	13.32	9.92	F
	C8b	13.37	9.97	F
	C38	15.22	10.33	F

Pond CES1

LEVEE	13.00
DESIGN WS	12.00
MAX WS	12.04

	WC#	Structure TE	Pipe IE	Structure Type
Inflow	C7	14.01	10.60	G
	C6a	13.51	10.11	F
Outflow	C9	12.04	8.64	F

Pond CES2

LEVEE	11.50
DESIGN WS	10.50
MAX WS	10.55

	WC#	Structure TE	Pipe IE	Structure Type
Inflow	C6a	13.51	10.11	F
	C9	12.04	8.64	F
	C12	12.00	8.60	G
	C16a	12.05	8.65	F
	C16b	12.04	8.64	F
Outflow	C15a	10.98	-7.81	F
	C15b	11.21	8.65	F
	C26(16	10.55	7.15	F
	C26(16	10.62	7.22	F

Pond CES4

LEVEE	11.00
DESIGN WS	10.00
MAX WS	10.64

	WC#	Structure TE	Pipe IE	Structure Type
Inflow	C11	11.14	7.74	G
	C23	11.48	8.08	G
	C27	11.06	7.66	G
Outflow	C25	10.76	7.36	F
	C20	10.64	7.24	F
	C30	10.70	7.30	F

Pond CES5

LEVEE	13.50
DESIGN WS	12.50
MAX WS	12.74

	WC#	Structure TE	Pipe IE	Structure Type
Inflow	C14	12.34	8.94	G
Outflow	C10	12.74	9.34	F

Pond CEP1

LEVEE	9.00
DESIGN WS	8.00
MAX WS	8.99

	WC#	Structure TE	Pipe IE	Structure Type
Inflow	C25	10.76	7.36	F
	C17	11.51	8.11	G
Outflow	C19	8.99	5.59	F

Pond CEP2

LEVEE	7.00
DESIGN WS	6.00
MAX WS	6.78

	WC#	Structure TE	Pipe IE	Structure Type
Inflow	C31	9.50	6.10	F
Outflow	C34	7.18	3.78	F
	C35	6.78	3.38	F

ABBREVIATIONS

TE	Top Elevation
IE	Invert Elevation
F	Flash Boards
G	Slide (Screw) Gate
WC#	Water Control (Structure) Number
WS	Water Surface (Elevation)

Table 6 HABITAT AREA		
Habitat	**Area (acres)**	**Percentage %**
Permanent	321	9.5
Causeway	5.5	0.2
180 Acre (North)	78.2	2.3
Northwest	105.6	3.1
Central CEP1	24	0.7
Central CEP2	27	0.8
South	12	0.4
Northeast NEP1	18	0.5
Northeast NEP2	3	0.1
Northeast NEP3	14	0.4
Northeast NEP4	34	1
Seasonal	2,276	67.2
180 Acre (North)	101	3
Northwest	373	11
Central West	212	6.3
Central	595	17.6
South	463	13.7
Northeast	532	15.7
Grassland	652	19.2
Causeway	151.1	4.5
180 Acre (North)	38	1.1
Northwest	56	1.7
Central	255	7.5
South	12	0.4
Northeast	140	4.1
Riparian Woodland	55	1.6
Causeway	25.4	0.7
Northwest	29.6	0.9
Berms, Roads, Channels	84.2	2.5
Total	3,390	100

To protect the wildlife area from pesticides applied to adjacent agricultural fields, grassland/upland buffer zones have been included along the boundaries of the project modification works wherever their orientation would not impede flood flows. Additional protection may be provided by existing roads and

agricultural canals or drains which separate the wildlife area from surrounding agricultural lands. Yolo County requires buffer zones to protect environmentally sensitive areas in locations where Category I or II materials may be applied. Category I materials (signal word "Danger") and Category II materials (signal word "Warning") are not to be applied in close proximity to environmentally sensitive areas unless a minimum distance between the closest operating nozzle and the sensitive area is maintained. This distance varies with the category and manner of application of the product, and may be from 50 to 500 feet. Buffer areas at the project modification works will vary up to 300 feet wide and consist primarily of grassland/upland cover type.

c. Threatened, and Endangered Species Protection: During the planning phase for the creation and maintenance of the Vic Fazio Yolo Wildlife Area, several environmental commitments were made. These commitments are contained in project NEPA/CEQA documentation and/or terms and conditions agreed to in State and Federal endangered species consultation documents. The perpetuation of these commitments is an essential component of the operation and maintenance of the project. The following is a summary of those commitments specifically made during the NEPA/CEQA process or agreed to by State, Local and other federal agencies that shall be adhered to by the Refuge Manager.

(1) Giant Garter Snake:

Surveys for giant garter snakes will be conducted by representative's of the Refuge Manager each May, July, and September to determine the presence or incidental take of the snake. Personnel conducting the surveys shall be qualified by the State of California Endangered Species Coordinator and U.S. Fish and Wildlife Service (FWS) to perform the work. The survey report format shall be at the discretion of the Refuge Manager. Any incidental sightings or takings noted during the surveys shall be recorded. The records of surveys shall be submitted to FWS and the District Engineer annually.

Develop management plans on the assumption that the snake is present.

Maintenance activities in the permanent wetland units shall be restricted to 1 May through 1 October (when the snake is active).

Introduction of large predatory fishes in the constructed permanent wetland areas shall be prohibited.

The Refuge Manager shall manage ponds to provide maximum nearshore emergent marsh zones of bulrush at densities that do no exclude snake and fish movement within the habitat. Also, the Refuge Manager shall maintain aquatic vegetative cover during the snake's active period without impeding foraging.

Incidental take of the giant garter snake for routine activities has been authorized by the U.S. Fish and Wildlife service until 28 October 2006. The Refuge Manager shall maintain records of any incidental take for the duration of the project and shall submit them to the District Engineer and the U.S. Fish and Wildlife Service. Prior to 28 October 2006, the amount of take shall be evaluated so that the initial authorization may be extended; reauthorization shall be initiated by the Refuge Manager to the U.S. Fish and Wildlife Service. Unacceptable levels of take shall require modifications to the Best Management Practices adopted in the Operations and Maintenance Manual. The U.S. Fish and Wildlife Service biological opinion dated October 1996 is attached as **Exhibit F-4.**

(2) **Swainson's Hawk:** Surveys for active nests shall be conducted annually by Refuge Managers personnel who have been qualified by the State of California Endangered Species Coordinator. Maintenance activities shall be restricted within 2 mile of active nest sites. The Swainson's Hawk breeding season is from approximately 1 March to 15 August. Acreage of seasonal wetlands shall be maintained to provide foraging habitat for the hawk.

(3) **Salmonids and Sacramento Splittail:**

Tracts and ponds will be sequentially drained from upper to lower elevation tracts/ponds.

Stranded salmonids will be rescued using the most appropriate means.

If any of the surveys result in positive identification, and operations and maintenance activities may adversely impact the Threatened and Endangered species, the Refuge Manager is to immediately give written or telephone notice to the California Department of Water Resources, The Reclamation Board, the Corps, and the FWS, and proceed with consultation, if necessary, with FWS, as agreed in the Memorandum of Understanding (**Exhibit F-3**).

d. Water Quality: Organically enriched effluent, biological or chemical pollutants and contaminants will be inhibited from entering the wetlands. Islands of floating solids will be avoided. A long-term water quality monitoring program will be established as follows: The Refuge Manager shall conduct a dissolved oxygen, temperature and "bio-assay" water quality sampling test at the toe drain source not later than one week prior to each flood-up of the seasonal wetlands for the initial two seasons. Subsequent to the two seasons, the frequency of water quality testing shall be determined by the Refuge Manager, but shall not be less than once every seven years. If these tests reveal approximately 70 percent toxicity, or above, the Central Valley Regional Water Quality Control Board shall be contacted and informed of the results. If the any of the existing wells on the wetlands are to be used for "back-up" water supply, wells shall be tested prior to their sustained use. Also, subsequent to each significant fall season runoff events (i.e., each flooding of the Yolo Bypass, if possible and not later than 48 hours after the peak of the runoff event has passed), the toe drain source should be tested as described above for evidence of upstream runoff problems.

The Refuge Manager shall maintain a file of records of water quality testing and results readily available at all times to the District Engineer.

e. Cultural Resources Protection: A cultural resources archival search and field survey conducted in 1992 by Far Western Anthropological Research Group, Inc (Far Western), resulted in the identification of a single cultural property within the project area of impact. This property, a prehistoric archeological site, was described by Far Western in its 1992 report, as a small scatter of artifactual debris with no obvious, associated midden. The site was further described as having been disturbed by laser leveling and years of plowing. The location of this site has been provided to the local sponsor by the Corps. Based on the archeological report, appropriate steps shall be taken to protect the site. Any maintenance and excavation at the site is prohibited and subject to Corps approval.

f. Recreation: Recreational use will consist of hunting, fishing in the toe drain and main canals, bird watching, hiking, bicycle riding, and nature study. An opportunity for non-consumptive recreation will be

available at all times. An area will be designated and protected from all recreational use. Hunting will be regulated as to ensure the long-term sustainability of wildlife populations. Specific areas shall be designated for hunting. A map of these designated areas shall be maintained by the Refuge Manager and be available for inspection by the Corps and The Reclamation Board at any time.

Recreation use of the project modification works will be carefully monitored by the resident Refuge Manager. The level of acceptable human activity in the area shall be maintained consistent with protecting the fish, wildlife, and vegetation. The numbers of hunters will be limited, and the seasons, dates, and times of each of these activities shall be restricted. Licensed hunters will be registered in and out, and their bags inspected. Records of hunter-take by species shall be recorded. The Refuge Manager will maintain record files of all hunting activities. These records shall encompass as a minimum the most recent five year period. Unauthorized access to the area, or egress from the site to adjacent properties, shall be monitored and controlled as necessary, by the Refuge Manager. The Refuge Manager and his/her maintenance staff at the site is expected to be a key deterrent to unauthorized activities.

Public access to the project modifications works will be limited by the Refuge Manager to ensure public safety and resources protection. For example the area will be closed during periods of flooding or if there are sensitive nesting areas.

g. Public Health (Mosquito Control): Unrestricted access will be provided to the Sacramento-Yolo Mosquito and Vector Control District (SYMVCD) for continual larval and adult mosquito surveillance and the continual monitoring of water quality and vegetation. Provisions will be made for air and/or ground applications of Bacillus thuringensis var. israelensis, methoprene growth regulators, or other EPA approved pesticides as needed. The permanent wetlands impoundments can be stocked with mosquito fish (Gambusia affinis). Game fishes or other predatory fishes that could reduce the population density of the mosquito fish **will not** be stocked in the permanent wetlands impoundments. SYMVCD personnel will be notified by DFG two weeks in advance of proposed flood-up date. They will also be notified of draw-down dates. A single contact person will be designated for both the Refuge Manager and SYMVCD to encourage efficient communication and coordinate management activities. Flood up of individual seasonal wetland units will be completed as rapidly as possible to ensure control of the Aedes sp. mosquito.

The following Water Management practices shall be implemented to for Mosquito Control:

Have manual control over water elevation.

Have a system that allows for the rapid draining of water during times of severe mosquito production or disease outbreak.

Depth at ponds shall be maintained at a minimum of 3 feet during summer.

Depth shall be maintained without fluctuations except during winter.

Shallower areas shall be drained and kept dry during the mosquito breeding season.

The following Vegetation Management practices shall be implemented for mosquito control:

Dense stands of aquatic vegetation shall be limited from shore margins to lower harborage and

enhance wave action.

Aquatic vegetation shall be maintained in small islands.

Plants that mat on the bottom shall be avoided.

Plants like cattails and bulrushes shall be maintained in moderate stands to function as substrate for mosquito predators while not promoting mosquito productivity.

Vegetation shall be periodically removed or partially harvested to reduce density.

Aquatic vegetation shall be periodically removed or partially harvested to reduce density.

The environmental commitments contained in the NEPA/CEQA documentation are listed in **Table 7**.

Table 7
Environmental Commitments

Commitment/Issue	Sites	Agency	Contact Person	Status
1. **Air Quality** - Maintain all construction areas free from dust or other air emissions that would cause the local standard for air pollution to be exceeded, or would cause a hazard or nuisance to others.	PCS YC D	COE	Tim Loui	Contractor utilized dust suppression during construction.
2. **Endangered Species** - Giant Garter Snake. Survey for the snake prior to construction.	PCS YC D	COE DFG	Debbie Giglio	DFG surveyed for snake. Corps, in agreement with FWS implemented measures recommended by FWS to avoid impacts to the snake. Measures included informational briefings to construction crews. Briefings were videotaped at request of FWS.
3. **Endangered Species** - Giant Garter Snake Monitor annually for the presence of the snake.	PCS YC D	COE Davis	Refuge Manager	O&M Manual, p.31 requires surveys in May, July and September annually.
4. **Endangered Species** - Giant Garter Snake. Develop management plans on the assumption that the snake is present.	PCS YC D	COE DFG Davis	Refuge Manager	O&M Manual, p. 32.
5. **Endangered Species** - Giant Garter Snake Limit maintenance activities in the waterways to 1 May - 1 October (when the snake is active)	PCS YC D	DFG Davis	Refuge Manager	O&M Manual, p. 32.
6. **Endangered Species** – Swainson's Hawk Convert most of the land at the Putah Creek Sinks Site to seasonal wetlands that will be available for foraging.	PCS	COE	Refuge Manager	67% of land is seasonal wetland.
7. **Endangered Species** - Swainson's Hawk Survey for Swainson's Hawk at the Yolo Causeway Site. If active nests are discovered at the site, avoid construction activities in the vicinity of the nests.	YC	COE	Refuge Manager	O&M Manual, p.32.
8. **Wetland Habitat** - Further expansion of the wetlands will be considered after successful operation of wetlands at the Davis Site.	D	Davis		Not Applicable.

Table 7 - Continued				
Commitment/Issue	**Sites**	**Agency**	**Contact Person**	**Status**
9. **Water Quality** - A long term water quality monitoring program will be established for each site.	PCS YC D	COE DFG Davis	Refuge Manager	O&M Manual, p.32.
10. **Water Quality** - Selenium Change in the current treatment process at the City's WPCP to optimize reduction of selenium in the oxidation ponds and overland flow treatment system.	D	Davis, Public Works Dept.		Not Applicable.
11. **Water Quality** - Selenium Construction of new, deeper city water wells. These wells will tap into aquifers with low levels of selenium.	D	Davis, Public Works Dept.		Not Applicable.
12. **Water Quality** - Selenium Use of storm waters that shown no concentrations of selenium.	D	Davis, Public Works Dept.		Not Applicable.
13. **Water Quality** - Selenium. Review of the permitting and regulation of selenium discharge to the wetlands on a mass loading basis rather than on a peak concentration basis.	D	Davis, Public Works Dept.		Not Applicable.
14. **Water Quality** - U.C. Davis will be contracted to provide research studies in various disciplines. These disciplines include, but are not limited to water quality, fish and wildlife biology, ecology, botany, land, air and water resources, civil and environmental engineering.	D	Davis, Public Works Dept.		Not Applicable.
15. **Cultural Resources** - The archeological survey of all three sites will be completed prior to construction, and the report will be submitted to the State Historical preservation Officer for review.	PCS YC D	COE Contract	Patti Johnson	Archeological survey completed in 1992 by Far Western Anthropological Research Group, Inc. Single site identified, location provided to DFG.

Table 7 – Continued				
Commitment/Issue	**Sites**	**Agency**	**Contact Person**	**Status**
16. **Cultural Resources** - Based upon to archeological report, appropriate steps will be taken to protect the prehistoric site found at the Putah Creek Sinks Site.	PCS	COE	Patti Johnson	O&M Manual, p.33, any maintenance or excavation prohibited without Corps approval.
17. **Recreation** - Hunting at the Putah Creek Sinks Site will be regulated by DFG so as to ensure the long-term sustainability of wildlife populations.	PCS	DFG	Refuge Manager	O&M Manual, p.33.
18. **Recreation** - An area will be designated and protected from all recreational use.	PCS	DFG	Refuge Manager	O&M Manual, p. 33 (South Area).
19. **Recreation** - Opportunities for non-consumptive recreation will be available at all sites.	PCS YC D	DFG, Davis	Refuge Manager	O&M Manual, p.343
20. **Public Health (Mosquito Control)** - Water Management. Have manual control over water elevation.	PCS YC D	COE DFG Davis	Refuge Manager	O&M Manual, pp. 11-15, & 33. Box risers on water control structures allow manual control over water elevation.
21. **Public Health (Mosquito Control)** - Water Management. Have a system that allows for the rapid draining of water during times of severe mosquito production or disease outbreak.	PCS YC D	COE DFG Davis	Refuge Manager	O&M Manual, pp. 13-16 (Drawdown) & 33.
22. **Public Health (Mosquito Control)** - Water Management. The shore banks would be steep enough to prevent pooling as water level recedes and to allow wave action and access by predators (mosquito fish).	PCS YC D	COE DFG Davis	Tim Loui (COE)	Shore bank slopes SYMVCD approved.
23. **Public Health (Mosquito Control)** - Water Management. Shoreline configurations would not isolate sections from the main body of water.	PCS YC D	COE DFG Davis	Tim Loui (COE)	Design does not isolate sections from main body of water.
24. **Public Health (Mosquito Control)** - Water Management. Depth would be maintained at a minimum of 3 feet during summer.	PCS YC D	DFG Davis	Refuge Manager	O&M Manual, pp. 11 & 34.

Table 7 – Continued				
Commitment/Issue	**Sites**	**Agency**	**Contact Person**	**Status**
25. **Public Health (Mosquito Control)** - Water Management. Depth would be maintained without fluctuations except during winter.	PCS YC D	DFG Davis	Refuge Manager	O&M Manual, pp. 11 & 34.
26. **Public Health (Mosquito Control)** - Water Management. Shallower areas would be drained and kept dry during the mosquito breeding season.	PCS YC D	DFG Davis	Refuge Manager	O&M Manual, p. 34.
27. **Public Health (Mosquito Control)** - Vegetation management. Dense stands of aquatic vegetation would be limited from shore margins to lower harborage and enhance wave action.	PCS YC D	COE DFG Davis	Refuge Manager	O&M Manual, p. 34.
28. **Public Health (Mosquito Control)** - Aquatic vegetation would be maintained in small islands.	PCS YC D	COE DFG Davis	Refuge Manager	O&M Manual, p. 34.
29. **Public Health (Mosquito Control)** - Plants that mat on the bottom would be avoided.	PCS YC D	COE DFG Davis	Refuge Manager	O&M Manual, p. 34.
30. **Public Health (Mosquito Control)** - Plants like cattails and bulrushes would be maintained in moderate stands to function as substrate for mosquito predators while not promoting mosquito productivity.	PCS YC D	COE DFG Davis	Refuge Manager	O&M Manual, p. 34.
31. **Public Health (Mosquito Control)** - Aquatic vegetation would be periodically removed or partially harvested to reduce density.	PCS YC D	DFG Davis	Refuge Manager	O&M Manual, p. 34.
32. **Public Health (Mosquito Control)** - Waterway Maintenance. Levees (berms), drain ditches and other water structures would be constructed and maintained to prevent seepage or flooding into adjacent lowland areas.	PCS YC D	COE DFG Davis	Tim Loui (COE)	O&M Manual, p. 28 (Supply and Drainage Canals, & Berms).
33. **Public Health (Mosquito Control)** - Levee faces would be steeply sloping to limit growth of marginal vegetation.	PCS YC D	COE DFG Davis	Tim Loui (COE)	Shore bank slopes SYMVCD approved.

Table 7 - Continued				
Commitment/Issue	**Sites**	**Agency**	**Contact Person**	**Status**
34. **Public Health (Mosquito Control)** - Waterway Maintenance. Dikes or drains would also have steep side slopes (1-1/2 to 2 feet horizontal drainage without standing water, and would be maintained free of vegetation.	PCS YC D	COE DFG Davis	Refuge Manager	O&M Manual, pp. 28-29.
35. **Public Health (Mosquito Control)** - Water Quality. Organically enriched effluent, biological or chemical pollutants and contaminants will be inhibited from entering the wetlands.	PCS YC D	DFG Davis	Refuge Manager	O&M Manual, pp. 32-33.
36. **Public Health (Mosquito Control)** - Water Quality. Islands of floating solids will be avoided.	PCS YC D	DFG Davis	Refuge Manager	O&M Manual, p. 32.
37. **Public Health (Mosquito Control)** – Chemical Control. Allow provisions for air and ground applications of *Bacillus thuringiensis* var. *israelensis*, methoprene growth regulators, or other target specific pesticides as needed	PCS YC D	DFG Davis	Refuge Manager	O&M Manual, pp. 33-34.
38. **Public Health (Mosquito Control)** – Surveillance. Access would be allowed for continual larval and mosquito surveillance and the continual monitoring of water quality and vegetation.	PCS YC D	DFG Davis	Refuge Manager	O&M Manual, pp. 33-34.
39. **Public Health (Mosquito Control)** - Biological Control. Wetlands would be stocked with mosquito fish *Gamusia affinis*.	PCS YC D	COE DFG Davis	Refuge Manager	O&M Manual, pp. 33-34.
40. **Public Health (Mosquito Control)** - Biological Control. There would be no stocking with game fishes or other predatory fishes that could reduce the population density of mosquito fish.	PCS YC D	COE DFG Davis	Refuge Manager	O&M Manual, pp. 33-34.

Exhibit A
Federal Flood Control Regulations
(See Standard Manual)

YOLO BASIN WETLANDS
(VIC FAZIO YOLO WILDLIFE AREA)

US Army Corps
of Engineers
Sacramento District

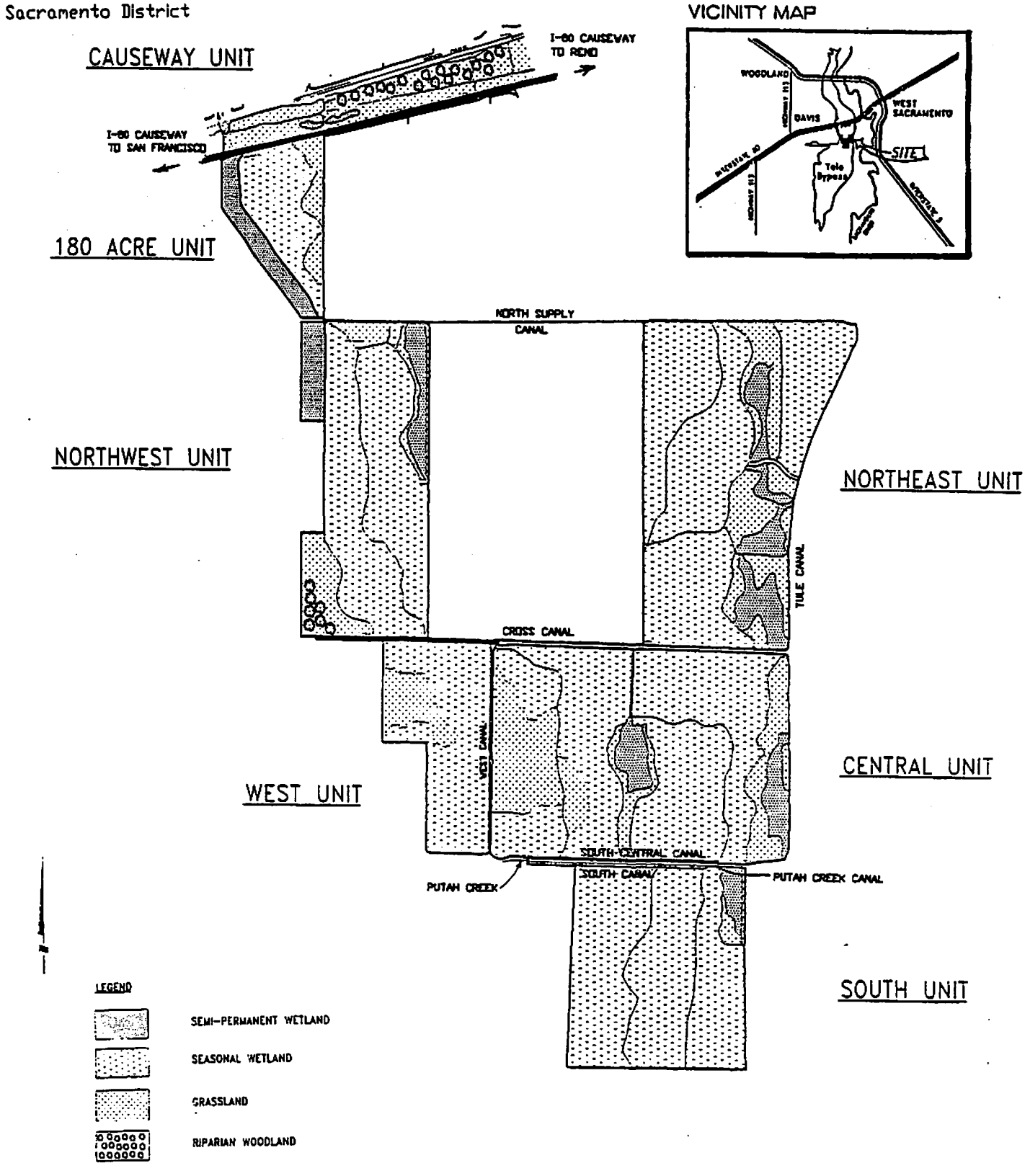

SITE AND VICINITY MAP

EXHIBIT A-1

TITLE 33—NAVIGATION AND NAVIGABLE WATERS

Chapter II — Corps of Engineers, Department of the Army

PART 208 — FLOOD CONTROL REGULATIONS

AUTHORITY: § 208.10 issued under Sec. 7, 58 Stat. 890; 33 U.S.C. 709.

§ 208.10 *Local flood protection works; maintenance and operation of structures and facilities* — (a) *General.* (1) The structures and facilities constructed by the United States for local flood protection shall be continuously maintained in such a manner and operated at such times and for such periods as may be necessary to obtain the maximum benefits.

(2) The State, political subdivision thereof, or other responsible local agency, which furnished assurance that it will maintain and operate flood control works in accordance with regulations prescribed by the Secretary of the Army, as required by law, shall appoint a permanent committee consisting of or headed by an official hereinafter called the "Superintendent," who shall be responsible for the development and maintenance of, and directly in charge of, an organization responsible for the efficient operation and maintenance of all of the structures and facilities during flood periods and for continuous inspection and maintenance of the project works during periods of low water, all without cost to the United States.

(3) A reserve supply of materials needed during a flood emergency shall be kept on hand at all times.

(4) No encroachment or trespass which will adversely affect the efficient operation or maintenance of the project works shall be permitted upon the rights-of-way for the protective facilities.

(5) No improvement shall be passed over, under, or through the walls, levees, improved channels or floodways, nor shall any excavation or construction be permitted within the limits of the project right-of-way, nor shall any change be made in any feature of the works without prior determination by the District Engineer of the Department of the Army or his authorized representative that such improvement, excavation, construction, or alteration will not adversely affect the functioning of the protective facilities. Such improvements or alterations as may be found to be desirable and permissible under the above determination shall be constructed in accordance with standard engineering practice. Advice regarding the effect of proposed improvements or alterations on the functioning of the project and information concerning methods of construction acceptable under standard engineering practice shall be obtained from the District Engineer or, if otherwise obtained, shall be submitted for his approval. Drawings or prints showing such improvements or alterations as finally constructed shall be furnished the District Engineer after completion of the work.

(6) It shall be the duty of the Superintendent to submit a semiannual report to the District Engineer covering inspection, maintenance, and operation of the protective works.

(7) The District Engineer or his authorized representatives shall have access at all times to all portions of the protective works.

(8) Maintenance measures or repairs which the District Engineer deems necessary shall be promptly taken or made.

(9) Appropriate measures shall be taken by local authorities to insure that the activities of all local organizations operating public or private facilities connected with the protective works are coordinated with those of the Superintendent's organization during flood periods.

(10) The Department of the Army will furnish local interests with an Operation and Maintenance Manual for each completed project, or separate useful part thereof, to assist them in carrying out their obligations under this part.

(b) *Levees* — (1) *Maintenance.* The Superintendent shall provide at all times such maintenance as may be required to insure serviceability of the structures in time of flood. Measures shall be taken to promote the growth of sod, exterminate burrowing animals, and to provide for routine mowing of the grass and weeds, removal of wild growth and drift deposits, and repair of damage caused by erosion or other forces. Where practicable, measures shall be taken to retard bank erosion by planting of willows or other suitable growth on areas riverward of the levees. Periodic inspections shall be made by the Superintendent to insure that the above maintenance measures are being effectively carried out and, further, to be certain that:

(i) No unusual settlement, sloughing, or material loss of grade or levee cross section has taken place;

(ii) No caving has occurred on either the land side or the river side of the levee which might affect the stability of the levee section;

(iii) No seepage, saturated areas, or sand boils are occurring;

(iv) Toe drainage systems and pressure relief wells are in good working condition, and that such facilities are not becoming clogged;

(v) Drains through the levees and gates on said drains are in good working condition;

(vi) No revetment work or riprap has been displaced, washed out, or removed;

(vii) No action is being taken, such as burning grass and weeds during inappropriate seasons, which will retard or destroy the growth of sod;

(viii) Access roads to and on the levee are being properly maintained;

(ix) Cattle guards and gates are in good condition;

(x) Crown of levee is shaped so as to drain readily, and roadway thereon, if any, is well shaped and maintained;

(xi) There is no unauthorized grazing or vehicular traffic on the levees;

(xii) Encroachments are not being made on the levee right-of-way which might endanger the structure or hinder its proper and efficient functioning during times of emergency.

Such inspections shall be made immediately prior to the beginning of the flood season; immediately following each major high water period, and otherwise at intervals not exceeding 90 days; and such intermediate times as may be necessary to insure the best possible care of the levee. Immediate steps will be taken to correct dangerous conditions disclosed by such inspections. Regular maintenance repair measures shall be accomplished during the appropriate season as scheduled by the Superintendent.

(2) *Operation.* During flood periods the levee shall be patrolled continuously to locate possible sand boils or unusual wetness of the landward slope and to be certain that:

(i) There are no indications of slides or sloughs developing;

(ii) Wave wash or scouring action is not occurring;

(iii) No low reaches of levee exist which may be overtopped;

(iv) No other conditions exist which might endanger the structure.

Appropriate advance measures will be taken to insure the availability of adequate labor and materials to meet all contingencies. Immediate steps will be taken to control any condition which endangers the levee and to repair the damaged section.

(c) *Flood walls.* — (1) *Maintenance.* Periodic inspections shall be made by the Superintendent to be certain that:

(i) No seepage, saturated areas, or sand boils are occurring;

(ii) No undue settlement has occurred which affects the stability of the wall or its water tightness;

(iii) No trees exist, the roots of which might extend under the wall and offer accelerated seepage paths;

(iv) The concrete has not undergone cracking, chipping, or breaking to an extend which might affect the stability of the wall or its water tightness;

(v) There are no encroachments upon the right-of-way which might endanger the structure or hinder its functioning in time of flood;

(vi) Care is being exercised to prevent accumulation of trash and debris adjacent to walls, and to insure that no fires are being built near them;

(vii) No bank caving conditions exist riverward of the wall which might endanger its stability;

(viii) Toe drainage systems and pressure relief wells are in good working condition, and that such facilities are not becoming clogged.

Such inspections shall be made immediately prior to the beginning of the flood season, immediately following each major high water period, and otherwise at intervals not exceeding 90 days. Measures to eliminate encroachments and effect repairs found necessary by such inspections shall be undertaken immediately. All repairs shall be accomplished by methods acceptable in standard engineering practice.

(2) *Operation.* Continuous patrol of the wall shall be maintained during flood periods to locate possible leakage at monolith joints or seepage underneath the wall. Floating plant or boats will not be allowed to lie against or tie up to the wall. Should it become necessary during a flood emergency to pass anchor cables over the wall, adequate measures shall be taken to protect the concrete and construction joints. Immediate steps shall be taken to correct any condition which endangers the stability of the wall.

(d) *Drainage structures*—(1) *Maintenance.* Adequate measures shall be taken to insure that inlet and outlet channels are kept open and that trash, drift, or debris is not allowed to accumulate near drainage structures. Flap gates and manually operated gates and valves on drainage structures shall be examined, oiled, and trial operated at least once

EXHIBIT A-2

every 90 days. Where drainage structures are provided with stop log or other emergency closures, the condition of the equipment and its housing shall be inspected regularly and a trial installation of the emergency closure shall be made at least once each year. Periodic inspections shall be made by the Superintendent to be certain that:

(i) Pipes, gates, operating mechanism, riprap, and headwalls are in good condition;

(ii) Inlet and outlet channels are open;

(iii) Care is being exercised to prevent the accumulation of trash and debris near the structures and that no fires are being built near bituminous coated pipes;

(iv) Erosion is not occurring adjacent to the structure which might endanger its water tightness or stability.

Immediate steps will be taken to repair damage, replace missing or broken parts, or remedy adverse conditions disclosed by such inspections.

(2) *Operation.* Whenever high water conditions impend, all gates will be inspected a short time before water reaches the invert of the pipe and any object which might prevent closure of the gate shall be removed. Automatic gates shall be closely observed until it has been ascertained that they are securely closed. Manually operated gates and valves shall be closed as necessary to prevent inflow of flood water. All drainage structures in levees shall be inspected frequently during floods to ascertain whether seepage is taking place along the lines of their contact with the embankment. Immediate steps shall be taken to correct any adverse condition.

(e) *Closure structures* – (1) *Maintenance.* Closure structures for traffic openings shall be inspected by the Superintendent every 90 days to be certain that:

(i) No parts are missing;

(ii) Metal parts are adequately covered with paint;

(iii) All movable parts are in satisfactory working order;

(iv) Proper closure can be made promptly when necessary;

(v) Sufficient materials are on hand for the erection of sand bag closures and that the location of such materials will be readily accessible in times of emergency.

Tools and parts shall not be removed for other use. Trial erections of one or more closure structures shall be made once each year, alternating the structures chosen so that each gate will be erected at least once in each 3-year period. Trial erection of all closure structures shall be made whenever a change is made in key operating personnel. Where railroad operation makes trial erection of a closure structure infeasible, rigorous inspection and drill of operating personnel may be substituted therefor. Trial erection of sand bag closures is not required. Closure materials will be carefully checked prior to and following flood periods, and damaged or missing parts shall be repaired or replaced immediately.

(2) *Operation.* Erection of each movable closure shall be started in sufficient time to permit completion before flood waters reach the top of the structure sill. Information regarding the proper method of erecting each individual closure structure, together with an estimate of the time required by an experienced crew to complete its erection will be given in the Operation and Maintenance Manual which will be furnished local interests upon completion of the project. Closure structures will be inspected frequently during flood periods to ascertain that no undue leakage is occurring and that drains provided to care for ordinary leakage are functioning properly. Boats or floating plant shall not be allowed to tie up to closure structures or to discharge passengers or cargo over them.

(f) *Pumping plants* – (1) *Maintenance.* Pumping plants shall be inspected by the Superintendent at intervals not to exceed 30 days during flood seasons and 90 days during off-flood seasons to insure that all equipment is in order for instant use. At regular intervals, proper measures shall be taken to provide for cleaning plant, buildings, and equipment, repainting as necessary, and lubricating all machinery. Adequate supplies of lubricants for all types of machines, fuel for gasoline or diesel powered equipment, and flash lights or lanterns for emergency lighting shall be kept on hand at all times. Telephone service shall be maintained at pumping plants. All equipment, including switch gear, transformers, motors, pumps, valves, and gates shall be trial operated and checked at least once every 90 days. Megger tests of all insulation shall be made whenever wiring has been subjected to undue dampness and otherwise at intervals not to exceed one year. A record shall be kept showing the results of such tests. Wiring disclosed to be in an unsatisfactory condition by such tests shall be brought to a satisfactory condition or shall be promptly replaced. Diesel and gasoline engines shall be started at such intervals and allowed to run for such length of time as may be necessary to insure their serviceability in times of emergency. Only skilled electricians and mechanics shall be employed on tests and repairs. Operating personnel for the plant shall be present during tests. Any equipment removed from the station for repair or replacement shall be returned or replaced as soon as practicable and shall be trial operated after reinstallation. Repairs requiring removal of equipment from the plant shall be made during off-flood seasons insofar as practicable.

(2) *Operation.* Competent operators shall be on duty at pumping plants whenever it appears that necessity for pump operation is imminent. The operator shall thoroughly inspect, trial operate, and place in readiness all plant equipment. The operator shall be familiar with the equipment manufacturers' instructions and drawings and with the "Operating Instructions" for each station. The equipment shall be operated in accordance with the above-mentioned "Operating Instructions" and care shall be exercised that proper lubrication is being supplied all equipment, and that no overheating, undue vibration or noise is occurring. Immediately upon final recession of flood waters, the pumping station shall be thoroughly cleaned, pump house sumps flushed, and equipment thoroughly inspected, oiled and greased. A record or log of pumping plant operation shall be kept for each station, a copy of which shall be furnished the District Engineer following each flood.

(g) *Channels and floodways* – (1) *Maintenance.* Periodic inspections of improved channels and floodways shall be made by the Superintendent to be certain that:

(i) The channel or floodway is clear of debris, weeds, and wild growth;

(ii) The channel or floodway is not being restricted by the depositing of waste materials, building of unauthorized structures or other encroachments;

(iii) The capacity of the channel or floodway is not being reduced by the formation of shoals;

(iv) Banks are not being damaged by rain or wave wash, and that no sloughing of banks has occurred;

(v) Riprap sections and deflection dikes and walls are in good condition;

(vi) Approach and egress channels adjacent to the improved channel or floodway are sufficiently clear of obstructions and debris to permit proper functioning of the project works.

Such inspections shall be made prior to the beginning of the flood season and otherwise at intervals not to exceed 90 days. Immediate steps will be taken to remedy any adverse conditions disclosed by such inspections. Measures will be taken by the Superintendent to promote the growth of grass on bank slopes and earth deflection dikes. The Superintendent shall provide for periodic repair and cleaning of debris basins, check dams, and related structures as may be necessary.

(2) *Operation.* Both banks of the channel shall be patrolled during periods of high water, and measures shall be taken to protect those reaches being attacked by the current or by wave wash. Appropriate measures shall be taken to prevent the formation of jams of ice or debris. Large objects which become lodged against the bank shall be removed. The improved channel or floodway shall be thoroughly inspected immediately following each major high water period. As soon as practicable thereafter, all snags and other debris shall be removed and all damage to banks, riprap, deflection dikes and walls, drainage outlets, or other flood control structures repaired.

(h) *Miscellaneous facilities* – (1) *Maintenance.* Miscellaneous structures and facilities constructed as a part of the protective works and other structures and facilities which function as a part of, or affect the efficient functioning of the protective works, shall be periodically inspected by the Superintendent and appropriate maintenance measures taken. Damaged or unserviceable parts shall be repaired or replaced without delay. Areas used for ponding in connection with pumping plants or for temporary storage of interior run-off during flood periods shall not be allowed to become filled with silt, debris, or dumped material. The Superintendent shall take proper steps to prevent restriction of bridge openings and, where practicable, shall provide for temporary raising during floods of bridges which restrict channel capacities during high flows.

(2) *Operation.* Miscellaneous facilities shall be operated to prevent or reduce flooding during periods of high water. Those facilities constructed as a part of the protective works shall not be used for purposes other than flood protection without approval of the District Engineer unless designed therefor. (Sec. 3, 49 Stat. 1571, as amended; 33 U.S.C. 701C) [9 F.R. 9999, Aug. 17, 1944; 9 F.R. 10203, Aug. 22, 1944]

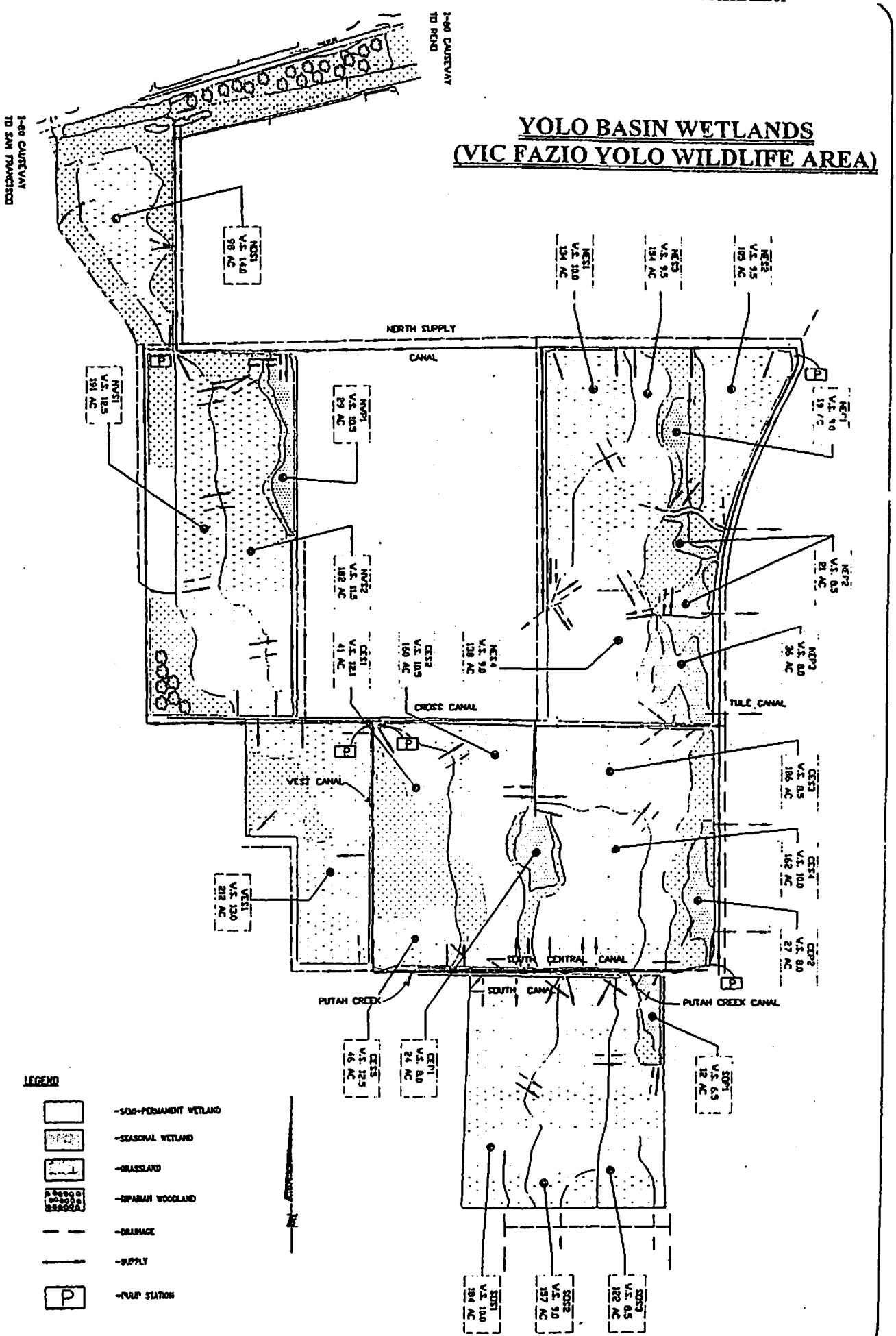

FLOOD-UP AND FLOOD-DOWN MAP

EXHIBIT A-3

Exhibit B
As-Constructed Drawings

Yolo Basin Wetlands

List of "As-Constructed" Drawings (On file in Sacramento District Corps of Engineers, Archived Files)

File Drawing No.	Description of Drawings
50-25-6077	Site map, plans, details, water control structure details, pump stations plans and details, and bridge details for the Yolo Basin Wetlands project. Includes plans of 180 Acre Unit, Causeway Unit (includes irrigation system and planting plan), Northeast Unit, Northwest Unit, West Unit, Central Unit, South Unit, Putah Creek bridge (South Unit), railcar bridge (Northeast Unit), north pump station, central pump station, west pump station, south pump station and northeast pump station, sheets 1 through 49.

Exhibit C
Plates of Suggested Flood Fighting Methods
(See Standard Manual)

Exhibit D

Suggested Check List No. 1 - Levee Inspection (Contained in Standard Manual)

Exhibit E
Suggested Check List - Berms, Channels, and Structures

INSPECTION CHECKLIST FOR
YOLO BASIN WETLANDS (Vic Fazio Yolo Wildlife Area)

Inspector _____ Date _____
Superintendent_____ Sheet No. _____

ITEM		REMARKS
A	Location of berm	
B	Waterside berm conditions	
C	Landside berm conditions	
D	Evidence of seepage or erosion	
E	Condition of roads on berm	
F	Condition of water control structures (risers, pipes, gates), alfalfa valves	
G	Condition of riprap, armoring	
H	Condition of pump structures, pumps and controls	
I	Condition of channels	
J	Extent of emergent growth - permanent wetlands	
K	Extent of emergent growth - seasonal wetlands	
L	Condition of revegetation plantings	
M	Sedimentation measurements	
N	Measures taken since last inspection	
O	Comments	

INSTRUCTIONS FOR COMPLETING INSPECTION CHECKLIST FOR YOLO BASIN WETLANDS (Vic Fazio Yolo Wildlife Area)

ITEM A	Describe location of berm corresponding to plans of project.
ITEM B	Indicate condition of waterside berm. Note any settlement, sloughing, loss of grade, slope, or erosion of berm. Indicate extent of erosion, sloughing, and settlement. Measure in tenths of foot.
ITEM C	Indicate condition of landside berm. Note any settlement, sloughing, loss of grade, slope, or erosion of berm. Indicate extent of erosion, sloughing, and settlement. Measure to tenths of foot. Indicate any evidence of rodent holes and extent of occurrence.
ITEM D	Indicate any evidence of seepage through the berm section, such as boils, leaks around and through pipes.
ITEM E	Indicate condition of berm crowns and roadways. Note any undulations and large cracks.
ITEM F	Indicate condition of water control structures, such as risers, pipes, slide gates, flap gates, etc. Indicate condition of alfalfa valves and piping.
ITEM G	Indicate condition of rip rap. Note any movement, sloughing of rock or erosion has taken place.
ITEM H	Indicate condition of pump structures, pumps, and controls. Note condition of pump structures and pumps after inundation caused by Bypass flooding. Note any unusual noise, leaks, and breakdown of pump equipment and controls.
ITEM I	Indicate condition of channels. Note the extent of aggradation or degradation. Indicate any change in channel and flood way grade. Note any sediment and vegetation buildup or extent of scouring.
ITEM J	Note nature, areal extent, and height of emergent growth in each permanent pond.
ITEM K	Note nature, areal extent, and height of emergent growth in each seasonal pond.
ITEM L	Indicate condition of revegetation (permanent, seasonal, and grasslands). Note extent of intrusion by undesirable species or losses due to flood damage or weather.
ITEM M	Indicate measurement of sediment aggradation or degradation.
ITEM N	Indicate construction, repairs, modifications to project since last report.

Table 4 - Continued
Water Control Structures

Pond CES3

LEVEE	9.50
DESIGN WS	8.50
MAX WS	8.58

	WC#	Structure TE	Pipe IE	Structure Type
Inflow	C21a	11.35	7.95	G
	C21b	11.30	8.00	G
	C29a	10.97	7.57	G
	C29b	10.74	7.34	G
	C30	10.70	7.30	F
Outflow	C31	9.50	6.10	F
	C32a	8.58	5.18	F
	C32b	8.73	5.33	F
	C33a	8.71	5.31	F
	C33b	8.96	5.56	F

Center N-S Ditch

LEVEE	11.50
DESIGN WS	10.50
MAX WS	8.40

	WC#	Structure TE	Pipe IE	Structure Type
Inflow	C15a	10.98	7.58	F
	C15b	11.21	7.81	F
	C19	8.99	5.59	F
	C20	10.64	7.24	F
Outflow	C21a	11.35	7.95	G
	C21b	11.30	8.00	G
	C22a	8.40	5.00	F
	C22b	8.48	5.08	F

Putah Creek Northern Delivery Canal

	a	b	c
LEVEE	13.50	12.50	11.40
DESIGN	11.90	11.30	10.40
MAX WS	11.95	11.47	10.43

	WC#	Structure TE	Pipe IE	Structure Type
Infl (a)	C2a	12.54	9.27	G
	C2b	12.38	9.09	G
Outfl (a)	C13a	11.95	8.55	F
	C13b	12.07	8.67	F
	C14	12.34	8.94	G
Infl (b)	C13a	11.95	8.55	F
	C13b	12.07	8.67	F
Outfl (b)	C12	12.00	8.60	G
	C16a	12.05	8.65	F
	C16b	12.04	8.64	F
	C17	11.51	8.11	G
	C18a	11.47	8.07	F
	C18b	11.50	8.10	F
	C23	11.48	8.08	G
	C24a	11.48	8.08	F
	C24b	11.47	8.07	F
Infl (c)	C24a	11.48	8.08	F
	C24b	11.47	8.07	F
Outfl (c)	C11	11.14	7.74	G
	C27	11.06	7.66	G
	C28a	10.43	7.03	F
	C28b	10.43	7.03	F
	C29a	10.97	7.57	G
	C29b	10.74	7.34	G

ABBREVIATIONS

TE	Top Elevation
IE	Invert Elevation
F	Flash Boards
G	Slide (Screw) Gate
WC#	Water Control (Structure) Number
WS	Water Surface (Elevation)

Table 4 - Continued
Water Control Structures

Pond SOS1

LEVEE	11.00
DESIGN WS	10.00
MAX WS	9.47

	WC#	Structure TE	Pipe IE	Structure Type
Inflow	SO2	10.86	7.46	G
	SO3	11.90	8.50	G
	SO5	10.20	6.80	G
	SO11	11.35	7.56	F
Outflow	SO4	10.43	7.03	F
	SO14	9.47	6.07	F
	SO15a	10.00	6.60	F
	SO15b	10.00	6.60	F

Pond SOS2

LEVEE	10.00
DESIGN WS	9.00
MAX WS	9.05

	WC#	Structure TE	Pipe IE	Structure Type
Inflow	SO4	10.43	7.03	F
	SO6	10.40	7.00	G
	SO9	11.90	8.50	G
	SO14	9.47	6.07	F
Outflow	SO8	10.12	6.72	F
	SO16a	9.44	6.04	F
	SO16b	9.44	6.04	F
	SO17	9.05	5.65	F

Pond SOS3

LEVEE	9.50
DESIGN WS	8.50
MAX WS	8.70

	WC#	Structure TE	Pipe IE	Structure Type
Inflow	SO8	10.12	6.72	F
	SO10a	10.96	7.56	F
	SO10b	10.96	7.56	F
	SO17	9.05	5.65	F
Outflow	SO12a	8.96	5.56	F
	SO12b	8.79	5.39	F
	SO18	9.21	5.81	F
	SO19a	8.75	5.35	F
	SO19b	8.70	5.30	F

Pond SOP1

LEVEE	7.50
DESIGN WS	6.50
MAX WS	6.93

	WC#	Structure TE	Pipe IE	Structure Type
Inflow	SO12a	8.96	5.56	F
	SO12b	8.79	5.39	F
	SO18	9.21	5.81	F
Outflow	SO13a	6.93	3.53	F
	SO13b	6.95	3.55	F
	SO13c	7.14	3.74	F

Putah Creek Southern Delivery Canal

	a	b
LEVEE	12.20	11.00
DESIGN WS	10.80	9.80
MAX WS	10.90	9.95

	WC#	Structure TE	Pipe IE	Structure Type
Infl (a)	C1a	12.36	9.13	G
	C1b	12.47	9.01	G
Outfl (a)	SO1a	10.80	7.50	F
	SO1b	10.97	7.57	F
	SO11	11.35	7.95	F
Infl (b)	SO1a	10.90	7.50	F
	SO1b	10.97	7.57	F
Outfl (b)	SO2	10.86	7.46	G
	SO3	11.90	8.50	G
	SO5	10.20	6.80	G
	SO6	10.40	7.00	G
	SO7a	10.09	6.69	F
	SO7b	9.95	6.55	F
	SO9	11.90	8.50	G
	SO10a	10.96	7.56	F
	SO10b	10.96	7.56	F

ABBREVIATIONS

TE	Top Elevation
IE	Invert Elevation
F	Flash Boards
G	Slide (Screw) Gate
WC#	Water Control (Structure) Number
WS	Water Surface (Elevation)

Table 4 - Continued
Water Control Structures

Pond NES1

LEVEE	11.00
DESIGN WS	10.00
MAX WS	10.32

	WC#	Structure TE	Pipe IE	Structure Type
Inflow	NE1a	11.64	8.24	G
	NE1b	11.63	8.23	G
	NE2	11.49	8.09	G
Outflow	NE6a	10.40	7.00	F
	NE6b	10.40	7.00	F
	NE15a	10.32	7.06	F
	NE15b	10.34	7.08	F

Pond NES2

LEVEE	10.50
DESIGN WS	9.50
MAX WS	9.80

	WC#	Structure TE	Pipe IE	Structure Type
Inflow	NE5a	11.24	7.84	G
	NE5b	11.18	7.78	G
Outflow	NE11a	9.84	5.38	F
	NE11b	9.80	5.40	F

Pond NES3

LEVEE	10.50
DESIGN WS	9.50
MAX WS	9.90

	WC#	Structure TE	Pipe IE	Structure Type
Inflow	NE3a	11.80	8.40	G
	NE3b	11.81	8.41	G
	NE6a	10.40	7.00	F
	NE6b	10.40	7.00	F
Outflow	NE7a	10.24	6.87	F
	NE7b	10.20	6.87	F
	NE16a	9.95	6.66	F
	NE16b	9.90	6.43	F
	NE19	10.03	6.61	F

Pond NEP1

LEVEE	9.00
DESIGN WS	8.00
MAX WS	10.30

	WC#	Structure TE	Pipe IE	Structure Type
Inflow	NE4	11.32	7.92	G
Outflow	NE8	10.30	4.96	F

Pond NEP2

LEVEE	9.00
DESIGN WS	8.00
MAX WS	8.20

	WC#	Structure TE	Pipe IE	Structure Type
Inflow	NE9	10.78	6.44	F
	NE20a	9.38	3.99	F
	NE20b	9.34	3.91	F
Outflow	NE21	8.20	4.99	F
	NE22a	8.26	4.96	F
	NE22b	8.37	5.02	F

Pond NEP3

LEVEE	9.00
DESIGN WS	8.00
MAX WS	8.20

	WC#	Structure TE	Pipe IE	Structure Type
Inflow	NE21	8.20	4.99	F
Outflow	NE25a	8.40	4.00	F
	NE25b	8.30	3.99	F

Pond NES4

LEVEE	10.00
DESIGN WS	9.00
MAX WS	9.34

	WC#	Structure TE	Pipe IE	Structure Type
Inflow	NE17a	11.38	7.92	F
	NE17b	11.38	8.03	F
	NE19	10.03	6.61	F
Outflow	NE20a	9.38	3.99	F
	NE20b	9.34	3.91	F
	NE24a	9.63	6.23	F
	NE24b	9.55	6.15	F

ABBREVIATIONS

TE	Top Elevation
IE	Invert Elevation
F	Flash Boards
G	Slide (Screw) Gate
WC#	Water Control (Structure) Number
WS	Water Surface (Elevation)

Table 4 - Continued
Water Control Structures

NE Water Control Basin

LEVEE	11.00
DESIGN WS	9.50
MAX WS	9.90

	WC#	Structure TE	Pipe IE	Structure Type
Inflow	NE14a	9.40	6.00	G
	NE14b	9.51	6.11	G
	NE15a	10.32	7.06	F
	NE15b	10.34	7.08	F
	NE16a	9.95	6.66	F
	NE16b	9.90	6.43	F
Outflow	NE17a	11.38	7.92	F
	NE17b	11.38	8.03	F
	NE18a	10.63	5.35	F
	NE18b	10.44	5.26	F

NE DITCH

LEVEE	10.50
DESIGN WS	9.50
MAX WS	9.80

	WC#	Structure TE	Pipe IE	Structure Type
Inflow	NE7a	10.24	6.87	F
	NE7b	10.20	6.87	F
	NE8	10.30	4.96	F
	NE11a	9.84	5.38	F
	NE11b	9.80	5.40	F
Outflow	NE9	10.78	6.44	F
	NE12a	9.90	4.37	F
	NE12b	9.90	4.40	F

Pond NOS1

LEVEE	14.50
DESIGN WS	13.50
MAX WS	13.86

	WC#	Structure TE	Pipe IE	Structure Type
Outflow	NO1	15.01	11.76	F
	NO2	13.86	10.50	F

ABBREVIATIONS

TE	Top Elevation
IE	Invert Elevation
F	Flash Boards
G	Slide (Screw) Gate
WC#	Water Control (Structure) Number
WS	Water Surface (Elevation)

At the onset of flooding of the Bypass, all water control structures shall be fully opened (slide gates and flash boards) before the flood water reaches the top of any external or internal project berms. This will allow the cells to flood-up equally and minimize the damage caused by water overtopping berms. It is recommended that when flooding of the Bypass is imminent, one set of flash boards (only on structures with a double set of flash boards) be removed prior to flooding to reduce the time to lift flash boards on all water control structures. Mobilization of crews to open gates and timing of operation in relation to initial flooding of the Bypass shall be at the discretion of the Refuge Manager. Upon failure of any water control structure, the structure is to be repaired or replaced as directed by the Refuge Manager using appropriate materials.

b. Pumps: Pumps are listed in Table 5.

Table 5 - Pumps

Pump Station	Type	No. of Pumps	Power each pump (HP)	Maximum Flow Rate (CFS)	Static Lift (approx. feet)	Purpose
North	Elevated	1	10	8	6	Main supply to 180 Acre Unit. (2nd lift) Summer make-up water to the Northwest permanent pond NWP1 (2nd lift). Back-up supply to Northwest Unit (2nd lift).
Central	Elevated	4	3 @ 60 1 @ 75	+115	14	Main supply to Northwest, Central, South, and Causeway Units. 1st lift for water to 180 Acre Unit. Back-up supply to Northeast Unit (via North canal). Shared with agricultural interests [1].
Southeast	Submersible	2	50	25	10	Back-up supply to Central and South Units. Summer make-up water to South (SOP1), Central (CEP1 and CEP2) permanent ponds.
Northeast	Submersible	3	50	80	10	Main supply to Northeast Unit. Summer make-up water to Northeast permanent ponds. Back-up 1st lift to 180 Acre Unit. Shared with agricultural interests [1].
West	Elevated	1	15	10	3	Drainage of West Unit.
Portable Crissafulli	Diesel	1	75	21	10	Drainage of NW permanent pond (NWP1) in summer. Back-up drainage of 180 Acre Unit.

[1] Los Rios Farms and Mace Irrigation District

Pumps, discharge pipes, structures, and controls shall be maintained to insure continuous satisfactory operation of the project modification works. Periodic inspections shall be made by the Refuge Manager to be certain that:

(1) Pipes, gates, operating mechanisms, head walls, and trash racks are in good condition;

(2) Pumps and controls are in good condition;

(3) If inundated during the flood season, then pump motors are to be inspected, cleaned, and made fully operational immediately after the flood season.

Manufacturer's maintenance manuals for elevated pumps (North, West, Central pump stations), submerged pumps (Northeast and South pump stations), control panels are attached in **Exhibit I**, and electrical schematics are attached in **Exhibit I-1**. The owner's maintenance manual for the portable Davit crane is attached in **Exhibit I-2**. The owner's maintenance manual for the spur gear hand winch is attached in **Exhibit I-3**.

c. Miscellaneous Facilities (Supply and Drainage Channels, Bridges, etc.): Miscellaneous structures which were constructed or exist in conjunction with the project modification works include supply and drainage channels, bridges, weirs, access gates, etc. Many of the supply and drainage canals also serve as irrigation canals for adjacent privately owned agricultural land.

1. Supply and Drainage Channels: Inspection of the supply and drainage channels shall be made at the same time the inspection of the other features of the project modification are made. Maintenance work shall be performed to insure the continuous satisfactory operation of the project modification works, which shall include periodic clearing of vegetation and removal of sediment to maintain design capacity. This maintenance would be cooperatively performed with irrigation districts in accordance to agreements made between the Department of Fish and Game, Los Rios Farms, and Mace Irrigation District. Supply and drainage canals are shown on sheet 48 of the as constructed drawings, File No. 50-25-6077. Cross sections of south central canal and south canal are shown on sheets 19 and 22, respectively. Side slopes are to be maintained as constructed. Drainages to be maintained without standing water and free of vegetation.

2. Bridges and Weirs: Inspection of the railcar bridge and Putah Creek Weir Structure shall be made at the same time that the inspection of the other features of the project modification are made, and shall be reported in the annual report. Inspection shall include condition of head walls, bridge supports, decks, and embankments. Maintenance shall be performed to insure structural integrity of bridges and weir structure. Drawings of the railcar bridge over the central supply canal are shown on sheet 49 of file no. 55-25-6077. Drawings of the Putah Creek Weir Structure are shown on sheets 45, 46, and 47.

10-03. Inspection and Maintenance of Miscellaneous Facilities within the Yolo Basin Wetlands Project Area.

a. Berms: Periodic inspection shall be made by the Refuge Manager to be certain that:

(1) No unusual settlement sloughing, or material loss of grade or berm cross section has taken place;

(2) No caving has occurred on either the waterside or the landward side of the berm which might affect the stability of the berm section;

(3) No seepage or saturated areas are occurring;

(4) Drains through the berms and gates on said drains are in good working condition;

(5) Access roads to and on the berms are being properly maintained;

(6) Access gates are in good condition;

(7) Crown of berm is shaped to drain readily, and roadway thereon, if any, is well shaped and maintained;

(8) There is no unauthorized grazing or vehicular traffic on the berms.

To insure that such maintenance measures are accomplished for the proper functioning of the berm, the following items shall be specifically covered in each inspection:

(1) Settlement of berm fill;

(2) Erosion of berm slopes on both the landward and waterside slopes;

(3) Presence of seepage or damage due to rodent burrows or saturated areas adjacent to the berms;

(4) Condition of access roads and roadways on the berms.

Methods used for repair or reconstruction of the berm fill will depend on the extent of the damaged section. If of small extent, the most suitable method will be to bring the berm back to line and grade by a fill made of six inch lifts of earth free from brush, roots, sod, organic matter or other unsuitable material. The Refuge Manager shall provide at all times such maintenance as may be required to insure serviceability of the berms. Patrol roads within the project modification works area shall be maintained in such condition that they will be accessible to trucks used to transport staff, equipment and supplies for maintenance.

b. Flood way: The flood way is the area within the Yolo Bypass encompassing the project modification works. Periodic inspection shall be made by the Refuge Manager to be certain that the flood way is not being restricted by the depositing of sediment, waste materials, debris, and building of unauthorized structures or other encroachments in accordance to the Assurance Agreement between California Department of Fish and Game, California Department of Transportation, Department of Water Resources, and the State Reclamation Board **(Exhibit F-2)**.

The Refuge manager shall monitor the sediment deposition within and directly adjacent to the project modification works in order to assess project impacts on sedimentation in the project area. Surveying for sediment accumulation shall occur only when mounding is visibly noticeable. The accumulation shall be estimated by the conduct of route traverse surveys and cross profile spot elevations taken normal to the route traverse. The sediment accumulation shall be estimated by the "end-area" method. The closure error of the route traverse shall be no greater than 0.1 foot in elevation.

The flood way conditions will remain the same, as far as possible, as those considered in the design assumptions and be maintained such that no new conditions develop that may effect the stability of the project berms, roads, pump stations, bridges, and weirs, or reduce the flood conveyance of the Yolo Bypass. At each inspection particular attention will be given to the location, extent and size of vegetal growth.

Any unauthorized operations within the flood way right-of-way, such as excavations, buildings and other structures, levees, bank protection or training dikes will be investigated. All rubbish and industrial waste shall be disposed of off-site. Changes in the channel bed such as aggradation or degradation, which would interfere with free-flow from side drainage structures or induce local meanders that would scour the banks shall be cleared. The intent of these inspections is to disclose all conditions which in any way affect the stability of the structures and their functioning. Each inspection report should name and comment on any repair measures that have taken place since the last inspection, and measures that should be taken.

10-04. Environmental Management.

a. General: The Refuge Manager shall be responsible for complying with all existing environmental documentation and regulations, and shall be responsible for all future necessary documentation and/or permits to comply with all federal, state, and local laws and regulations. Certain operation and maintenance activities in wetlands or other regulated waters (e.g., earthmoving, bank stabilization, berm repairs, channel alterations, etc.) may require a permit under Section 404 of the Clean Water Act, and/or Section 10 of the Rivers and Harbors Act, from USACE. Permit inquires should be directed to:

Chief, Regulatory Branch
U.S. Army Corps of Engineers
Sacramento District
1325 J Street
Sacramento, CA 95814-2922

916-557-5250

b. Habitat Area: The Yolo Basin Wetlands will be maintained in the following approximate habitat area percentages of the entire 3,400 acre area as shown in **Table 6**, in as-constructed drawings (No. 55-25-6077), and site map (Exhibit A-1).

THIS AGREEMENT is entered into this _____ day of _____, 19 __, by and between the DEPARTMENT OF THE ARMY (hereinafter referred to as the "Government"), acting by and through the Assistant Secretary of the Army (Civil Works), and the DEPARTMENT OF FISH AND GAME, STATE OF CALIFORNIA,(hereinafter referred to as the "Local Sponsor"), acting by and through the DIRECTOR, DEPARTMENT OF FISH AND GAME,

WITNESSETH, THAT:

WHEREAS, modification of Sacramento River Flood Control Project, Yolo Bypass near the I-80 Causeway, a project constructed by the Secretary of the Army, hereinafter referred to as the "Project Modification", as defined in Article I.b., of this Agreement, is authorized by Section 1135(b) of the Water Resources Development Act of 1986, Public Law 99-662, as amended;

WHEREAS, the Project Modification is subordinate to purposes of the Sacramento River Flood Control Project with the Sacramento and San Joaquin Drainage District (i.e. The Reclamation Board of the State of California) having a flowage easement over the Project lands;

WHEREAS, Section 1135 (b) of the Water Resources Development Act of 1986, Public Law 99-662, as amended, specifies the cost-sharing requirements applicable to this Project Modification;

WHEREAS, Section 344 of the Water Resources Development Act of 1992, Public Law 102-580, modified the cost sharing requirements and credits applicable to this Project Modification;

WHEREAS, Section 221 of the Flood Control Act of 1970, Public Law 91-611, as amended, provides that the construction of any water resources project by the Secretary of the Army shall not be commenced until each non-federal interest has entered into a written agreement to furnish its required cooperation for the project;

WHEREAS, the Local Sponsor has the authority and capability to furnish the cooperation hereinafter set forth and is willing to participate in cost-sharing and financing in accordance with the terms of this Agreement.

NOW, THEREFORE, the parties agree as follows:

ARTICLE I - DEFINITIONS AND GENERAL PROVISIONS

For purposes of this Agreement:

a. The term "Existing Project" shall mean the Sacramento

UNITED STATES ARMY CORPS OF ENGINEERS

SECTION 1135

PROJECT MODIFICATIONS

FOR THE IMPROVEMENT OF

THE ENVIRONMENT

****

LOCAL COOPERATION AGREEMENT

BETWEEN

THE DEPARTMENT OF THE ARMY

AND

DEPARTMENT OF FISH AND GAME,

STATE OF CALIFORNIA

FOR MODIFICATION OF THE

SACRAMENTO RIVER FLOOD CONTROL PROJECT,

YOLO BYPASS

NEAR the I-80 CAUSEWAY

CERTIFICATION REGARDING LOBBYING

The undersigned certifies, to the best of his or her knowledge and belief that:

(1) No Federal appropriated funds have been paid or will be paid, by or on behalf of the undersigned, to any person for influencing or attempting to influence an officer or employee of any agency, a Member of Congress, and officer or employee of Congress, or an employee of a Member of Congress in connection with the awarding of any Federal contract, the making of any Federal grant, the making of any Federal loan, the entering into of any cooperative agreement, and the extension, continuation, renewal, amendment, or modification of any Federal contract, grant, loan, or cooperative agreement.

(2) If any funds other than Federal appropriated funds have been paid or will be paid to any person for influencing or attempting to influence an officer or employee of any agency, a Member of Congress, an officer or employee of Congress, or an employee of a Member of Congress in connection with this Federal contract, grant, loan, or cooperative agreement, the undersigned shall complete and submit Standard Form-LLL, "Disclosure Form to Report Lobbying, " in accordance with its instructions.

(3) The undersigned shall require that the language of this certification be included in the award documents for all subawards at all tiers (including subcontracts, subgrants, and contracts under grants, loans, and cooperative agreements) and that all subrecipients shall certify and disclose accordingly. The certification is a material representation of fact upon which reliance was placed when this transaction was made or entered into. Submission of the certification is a prerequisite for making or entering into this transaction imposed by Section 1352, Title 31, U.S. Code. Any person who fails to file the required certification shall be subject to a civil penalty of not less the $10,000 and not nor than $100,000 for each such failure.

Jacqueline E. Schafer
Director, Department of Fish and Game,
State of California

Date: Oct 9, 1996

CERTIFICATE OF AUTHORITY

I, Craig Manson, do hereby certify that I am the principal legal officer of the California Department of Fish and Game, that the Department of Fish and Game is a legally constituted public body with full authority and legal capability to perform the terms of the Agreement between the Department of the Army and the Department of Fish and Game in connection with the Project Modification, and to pay damages, if necessary, in the event of the failure to perform, in accordance the Section 221 of Public Law 91-611, and that the persons who have executed this Agreement on behalf of the Department of Fish and Game have acted within their statutory authority.

IN WITNESS HEREOF, I have made and executed this certification this 9th day of October, 1996.

Craig Manson, General Counsel
California Department of Fish and Game

IN WITNESS WHEREOF, the parties hereto have executed this Amendment, which shall become effective upon the date it is signed by the Assistant Secretary of the Army (Civil Works).

THE DEPARTMENT OF THE ARMY

BY: _____
H. Martin Lancaster
Assistant Secretary of the Army
(Civil Works)

DATE: 16 OCT 1996

THE DEPARTMENT OF FISH AND GAME

BY: _____
Jacqueline E. Schafer
Director, Department of Fish and Game,
State of California

DATE: Oct 9, 1996

3. Amend Article VI - METHOD OF PAYMENT by deleting Article VI.a. and replace with the following:

"a. The Local Sponsor shall provide, during the period of implementation, the cash payments required under Article II of this Agreement. Total project modification costs are currently estimated to be $11,890,000. In order to meet its share, the Local Sponsor must provide a cash contribution currently estimated to be $2,972,500 less any credit received for the value of LERRD's (currently estimated to be $5,154,000) pursuant to Article I. The dollar amounts set forth in this Article are based upon the Government's best estimates which will reflect projection of costs, price level changes, and anticipated inflation. Such cost estimates are subject to adjustments based upon costs actually incurred and are not to be construed as the total financial responsibilities of the Government and the Local Sponsor."

4. Amend Article XVI - TERMINATION OR SUSPENSION as follows.

a. Replace "Article V" in the thirteenth line of Article XVI.b. with "Article VI.d.".

b. Delete Article XVI.c. and replace with the following:

"c. Notwithstanding any other provision of this Agreement, if, upon the award of any contract (including a contract modification) for implementation of the Project Modification, cumulative financial obligations for implementation would exceed $11,890,000, the Government and the Local Sponsor agree to defer award of that contract and all subsequent contracts for implementation of the Project Modification until such time as the Government and the Local Sponsor agree to proceed with further contract awards for the Project Modification, but in no event shall the award of contracts be deferred for more than three years. Notwithstanding this general provision for deferral of contract awards, the Government, after consultation with the Local Sponsor, may award a contract or contracts after the Assistant Secretary of the Army (Civil Works) makes a written determination that the award of such contract or contracts must proceed in order to comply with law or to protect life or property from imminent and substantial harm."

5. Replace the term "Contracting Officer", wherever it appears in the LCA, with the term "District Engineer".

6. All provisions of the LCA not specifically amended herein, remain in full force and effect.

WHEREAS, the Yolo Basin Wetlands Project was Federally authorized for the purpose of wetlands and grasslands restoration and this modification remains within the scope of this authorization;

WHEREAS, the 180-acre unit is important because it would provide a continuous corridor for the movement of wildlife between the Putah Sinks site and the Causeway site;

WHEREAS, the Local Sponsor has proposed certain cost-saving measures on the Putah Sink site and Causeway site construction to enable implementation of this additional work to occur within the estimated total project modification costs and such measures are included in the Supplemental Project Modification Report referred to herein;

NOW, THEREFORE, the parties agree to amend the LCA as follows:

1. Unless otherwise specified, all paragraph and Article references are to paragraphs and Articles in the LCA.

2. Amend Article I - DEFINITIONS AND GENERAL PROVISIONS as follows.

a. Delete Article I. b. and replace with the following:

"b. The term "Project Modification" shall mean the modification to the Putah Sink site as described in the report titled "Yolo Basin Wetlands, Sacramento River, CA, April 1992" and as modified by the "Supplemental Project Modification Report, Yolo Basin Wetlands, Sacramento River, California, 180-Acre Addition, August 1996" approved by Chief, Planning Division, Directorate of Civil Works on 2 Oct 1996. The modification consists of creating wetlands of various classifications by constructing canals, water control structures, dikes, ponds, roads, and gates, and the construction of the administration/maintenance facility referred to in Section 344 of PL 102-580 as the "one time construction of the operation and maintenance facilities". The wetlands will be created on lands supplied by the Local Sponsor. This project modification is to be undertaken on portions of the levees and flow conveyance area of the Yolo Bypass area of the Existing Project."

b. Delete Article I.e. and replace with the following:

"e. The term "District Engineer" shall mean the U.S. Army Engineer for the Sacramento District or his or her designee."

c. Insert the following immediately after Article I.k.

"l. The term "financial obligation for implementation" shall mean a financial obligation of the Government, other than an obligation pertaining to the provision of lands, easements, rights-of-way, relocations, and borrow and dredged or excavated material disposal areas, that results or would result in a cost that is or would be included in total project modification costs."

FIRST AMENDMENT

OF THE

LOCAL COOPERATION AGREEMENT

BETWEEN

THE DEPARTMENT OF THE ARMY

AND

THE DEPARTMENT OF FISH AND GAME,

STATE OF CALIFORNIA

FOR MODIFICATION OF THE

SACRAMENTO RIVER FLOOD CONTROL PROJECT,

YOLO BYPASS

NEAR PUTAH SINK

THIS AMENDMENT is entered into this 16th day of October, 1996, by and between the DEPARTMENT OF THE ARMY (hereinafter the "Government"), acting by and through the Assistant Secretary of the Army (Civil Works), and the DEPARTMENT OF FISH AND GAME, STATE OF CALIFORNIA (hereinafter the "Local Sponsor"), acting by and through the DIRECTOR, DEPARTMENT OF FISH AND GAME,

WITNESSETH, THAT:

WHEREAS, the Government and the Local Sponsor desire to amend the Local Cooperation Agreement for Modification of the Sacramento River Flood Control Project, Yolo Bypass Near Putah Sink entered into by the Acting Assistant Secretary of the Army (Civil Works) and the Director, Department of Fish and Game on December 23, 1993 (hereinafter the "LCA");

WHEREAS, by letter dated February 29, 1996, the Local Sponsor proposed to further modify the project by constructing seasonal wetlands and grasslands, maintaining existing wetlands and constructing associated infrastructure on an additional 180-acre parcel that connects the Putah Sinks site with the Causeway site (hereinafter the "180-acre unit");

Exhibit F-1
Local Cooperation Agreement

COPY

A final walk-through was conducted on October 23, 1997 and the work on the wetlands is complete, with the exception of a few punch list items. These items include: propagation and delivery of Causeway Unit plantings, planting plans for Causeway Unit, leakage from water control structures, removing an old pipe, and road repair. A confirmatory letter will be sent to you when the punch list items are completed. The completed work is hereby transferred to the State of California Department of Fish and Game, as of the date of this letter for operation and maintenance. The transfer is in accordance with agreements of local cooperation signed in December 1993 (revised April 1995 and October 1996).

Copies of a final Operations and Maintenance Manual for the wetlands will be provided to your agency upon completion. Please sign below indicating your acceptance of the completed work and return the original in the envelope provided.

Sincerely,

Dorothy F. Klasse
Colonel, Corps of Engineers
District Engineer

Acceptance of completed work by Department of Fish and Game

_____ _____

Jacqueline E. Schafer Date
Director

DEPARTMENT OF THE ARMY
U.S. ARMY ENGINEER DISTRICT, SACRAMENTO
CORPS OF ENGINEERS
1325 J STREET
SACRAMENTO, CALIFORNIA 95814-2922

COPY

REPLY TO
ATTENTION OF

January 22, 1998

Navigation and Flood Control Unit

Ms. Jacqueline E. Schafer, Director
Department of Fish and Game
State of California
1416 - 9th Street
Sacramento, California 95814

Dear Ms. Schafer:

You are hereby notified that the Corps of Engineers has completed the work on modification of the Sacramento Flood Control Project, Yolo Basin Wetlands Sacramento River, California under authority of the Flood Control Act of March 1, 1917, and is transferring the project to your agency for operation and maintenance.

The completed work consists of construction of approximately 3,300 acres of wetlands in the Yolo Bypass. The wetlands work consists of 233 acres of permanent wetlands, 2,276 acres of seasonal wetlands, 651 acres of grasslands, 55 acres of riparian woodland, and 84 acres of roads, berms, and channels. Construction included a weir structure and bridge across Putah Creek, a maintenance bridge across the "main canal east" to the Northeast Unit, and water control structures to supply and drain the wetlands. Pump stations that were provided include: the North pump station to supply the 180-Acre (North) and Northwest Units; Central pump station to supply the Northwest, Central, South, and Causeway Units; Southeast pump station to supply the Central and South Units; Northeast pump station to supply the Northeast Unit; West pump station to drain the West Unit; and a portable Crissafulli diesel pump to drain the Northwest and 180-Acre Units. The wetlands work was completed under a cooperative agreement between the Corps, the U.S. Fish and Wildlife Service, and Ducks Unlimited, Incorporated. Design was accomplished under contract numbers DU-CA-0058-0001 and DU-CA-0058-0009. Construction was accomplished under Contract Numbers: DU-CA-0058-0002 for the Northwest Unit; DU-CA-0058-0003 for the Northeast Unit; DU-CA-0058-0004 for the West and Central Units; DU-CA-0058-0005 for the South Unit; DU-CA-0058-0006 for the Putah Creek bridge structure; DU-CA-0058-0007 for the power line connection; DU-CA-0058-0008 for pump stations; and DU-CA-0058-0010 for the Causeway/180-Acre Units.

Copies of as-built drawings will be provided to your agency upon completion. Please sign below indicating your acceptance of the completed work and return the original in the envelope provided.

Sincerely,

Douglas R. Gault
Lieutenant Colonel, Corps of Engineers
Acting District Engineer

Enclosure

Acceptance of completed work by Department of Fish and Game

_____ _____

Jacqueline E. Schafer
Director

Date

CC:

CESPK-PPMD
CESPK-PM-C (Hucks)
CESPK-ED
CESPK-ED-D
CESPK-CO
CESPK-CO-O
CESPK-CO-RV

DEPARTMENT OF THE ARMY
U.S. ARMY ENGINEER DISTRICT, SACRAMENTO
CORPS OF ENGINEERS
1325 J STREET
SACRAMENTO, CALIFORNIA 95814-2922

REPLY TO
ATTENTION OF

April 13, 1998

Navigation and Flood Control Unit

Ms. Jacqueline E. Schafer, Director
Department of Fish and Game
State of California
1416 - 9th Street
Sacramento, California 95814

Dear Ms. Schafer:

We are pleased to notify you that the Corps of Engineers has completed the work on the Operations and Maintenance Facility (Yolo Bypass Wildlife Area Headquarters) on 45211 County Road 32B, Davis, California as part of the Modification of the Sacramento Flood Control Project, Yolo Basin Wetlands Sacramento River, California under authority of the Flood Control Act of March 1, 1917 and is transferring the project to your Department for operation and maintenance.

The completed work consists of construction of a 2,400 square feet administration building, 1,600 square feet caretaker residence, and 7,100 square feet maintenance building on 13.9 acres adjacent to the Yolo Bypass. Design and construction was accomplished under contract number DACW05-96-C-0031.

A final walk-through was conducted on November 26, 1997 and the project is complete. The capacity of an electrical panel and the responsibility for a roof leak at the maintenance building are being investigated. A confirmatory letter will be sent to you when these items are resolved. The completed work is hereby transferred to the State of California Department of Fish and Game as of the date of this letter for operation and maintenance. The transfer is in accordance with agreements of local cooperation signed in December 1993 (revised April 1995 and October 1996) and Code of Federal Regulations, Title 33, Part 208, Flood Control Regulations (enclosure 1).

Exhibit F
Letter of Transfer to the Department of Fish and Game

River Flood Control Project which was authorized by the Flood Control Act of 1917 with modification by subsequent acts. The project consists of a comprehensive system of levees, overflow weirs, drainage pumping plants and flood bypass channels reaching from Collinsville to Red Bluff.

b. The term "Project Modification" shall mean the modification to the Causeway site as described in the project modification report titled "Yolo Basin Wetlands, Sacramento River, CA, April 1992" and the supplement to that report titled "Yolo Basin Wetlands, Yolo Causeway Site, Sacramento River, CA, September 1994". The modification consists of creating wetlands of various classifications by constructing canals, water control structures, dikes, ponds, roads, and gates. The wetlands will be created on lands supplied by the Local Sponsor. This project modification is to be undertaken on portions of the levees and flow conveyance area of the Yolo Bypass area of the existing project.

c. The term "total project modification costs" shall mean all costs incurred by the Local Sponsor and the Government over and above costs of the existing project, that are directly related to implementation of the Project Modification. Such costs shall include, but not necessarily be limited to, feasibility phase planning and engineering costs; costs of applicable engineering and design; implementation costs including costs of construction; supervision and administration costs; and costs of contract dispute settlements or awards; but shall not include the value for lands, easements, rights-of-way, relocations, disposal areas (LERRDs) provided for the Project Modification by the Local Sponsor, or betterments, operation, repair, maintenance, replacement, and rehabilitation.

d. The term "period of implementation shall mean the time from the advertisement of the first contract to the time the contracting Officer certifies in writing to the local sponsor that construction of the project is complete. The Contracting Officer shall furnish to the local sponsor copies of the Government's written notice of acceptance of completed work furnished to the Contractor(s) for all contracts for the Project.

e. The term "Contracting Officer" shall mean the District Engineer or the Principal Contracting Authority Responsible for Contracting for Sacramento District, Corps of Engineers, or his or her designee.

f. The term "highway" shall mean any highway, thoroughfare, roadway, street, or other public road or way.

g. The term "relocations" shall mean the preparation of plan and specifications for, and the accomplishment of all, alterations, modifications, lowering or raising in place, and/or

new construction related to, but not limited to, existing: railroads, highways, bridges, railroad bridges and approaches thereto, pipelines, public utilities (such as municipal water and sanitary sewer lines, telephone lines, and storm drains), aerial utilities, cemeteries, and other facilities, structures, and improvements determined by the Government to be necessary for the implementation, operation and maintenance of the Project Modification.

h. The term "fiscal year" shall mean one fiscal year of the Government. The Government fiscal year begins on October 1 and ends on September 30.

i. The term "involuntary acquisition" shall mean the acquisition of lands, easements, and rights-of-way by eminent domain.

j. The term "functional portion of the Project Modification" shall mean a completed portion of the Project Modification as determined by the Contracting Officer in writing to be suitable for tender to the Local Sponsor to operate and maintain in advance of completion of implementation of the entire Project Modification. To be suitable for tender, the Contracting Officer must determine that the completed portion of the project can function independently and for a useful purpose, although the balance of the project is not complete.

k. Credit for LERRD's will be limited to the Local Sponsor share of the total project modification costs.

ARTICLE II - OBLIGATIONS OF THE PARTIES

a. The Government, subject to receiving funds and appropriated by the Congress of the United States, and using funds provided by the Local Sponsor shall expeditiously plan and implement the Project Modification (including relocations of railroad bridges and approaches thereto) applying those procedures usually followed or applied in Federal projects, pursuant to Federal laws, regulations, and policies. The Local Sponsor shall be afforded the opportunity to review and comment on all contracts, including relevant plans and specifications, prior to the issuance of invitations for bid. To the extent possible, the Local Sponsor will be afforded the opportunity to review and comment on all modifications and change orders prior to the issuance to the contractor of a Notice to Proceed. The Government will consider the comments of the Local Sponsor, but award of contracts, modifications or change orders, and performance of all work on the Project Modification (whether the work is performed under contract or by Government personnel), shall be exclusively within the control of the Government.

b. When the Government determines that the Project

Modification or a functional portion of the Project Modification is complete, the Government shall turn the completed Project Modification or functional portion over to the Local Sponsor, which shall accept the Project Modification or functional portion and be solely responsible for operating, repairing, maintaining, replacing, and rehabilitating the Project Modification or functional portion in accordance with Article VIII hereof.

c. As further specified in Article III hereof, the Local Sponsor shall provide all lands, easements, rights-of-way, and suitable borrow and dredged material disposal areas necessary for the Project Modification beyond those already provided for the Existing Project, and perform or provide for the performance of all relocations (excluding railroad bridges and approaches thereto) determined by the Government to be necessary for the Project Modification.

d. If the value of the contributions provided under paragraph c. of this Article is less than 25 percent of the total project modification costs, the Local Sponsor shall provide, during the period of implementation, a cash contribution necessary to make the Local Sponsor's share equal to 25 percent of the total project modification costs.

e. If the value of contributions provided under paragraph c. of this article is greater than the Local Sponsor's required 25-percent contribution no credit or reimbursement will be given towards the excess amount.

f. No Federal funds may be used to meet the Local Sponsor's share of total project modification costs under this Agreement unless the expenditure of such funds is expressly authorized by statute as verified in writing by the granting Federal agency.

ARTICLE III - LANDS, FACILITIES AND PUBLIC LAW 91-646 RELOCATION ASSISTANCE

a. The Local Sponsor shall furnish to the Government all lands, easements and rights-of-way, including suitable borrow, spoil and dredged material disposal areas, as may be determined by the Government to be necessary for the implementation, operation, maintenance, repair, rehabilitation and replacement of the Project Modification, and shall furnish to the Government evidence supporting the Local Sponsor's legal authority to grant rights-of-entry to such lands. The necessary lands, easements,and rights-of-way may be provided incrementally, but all lands, easements, and rights-of-way determined by the Government to be necessary for work to be performed under a construction contract must be furnished prior to the advertisement of that construction contract.

b. The Local Sponsor shall provide or pay to the Government the cost of providing all retaining dikes, waste weirs, bulkheads, and embankments, including all monitoring features and stilling basins, that may be required at any dredged material disposal areas necessary for implementation of the Project Modification.

c. Upon notification from the Government, the Local Sponsor shall accomplish or arrange for accomplishment at no cost to the Government all relocations (excluding railroad bridges and approaches thereto) determined by the Government to be necessary for implementation of the Project Modification.

d. The Local Sponsor shall comply with the applicable provisions of the Uniform Relocation Assistance and Real Property Acquisition Policies Act of 1970, Public Law 91-646, as amended by Title IV of the Surface Transportation and Uniform Relocation Assistance Act of 1987 (Public Law 100-17), and the Uniform Regulations contained in 49 CFR Part 24, in acquiring lands, easements, and rights-of-way for implementation and subsequent operation and maintenance of the Project Modification, and inform all affected persons of applicable benefits, policies and procedures in connection with said Act.

ARTICLE IV - VALUE OF LANDS AND FACILITIES

a. The value of the lands, easements, and rights-of-way to be credited towards the Local Sponsor's share of total project modification costs will be determined in accordance with the following procedures:

1. If the lands, easements, or rights-of-way are owned by the Local Sponsor as of the date the first construction contract for the Project Modification is awarded, the credit shall be the fair market value of the interest at the time of such award. The fair market value shall be determined by an appraisal, to be obtained by the Local Sponsor, which has been prepared by a qualified appraiser who is acceptable to both the Local Sponsor and the Government. The appraisal shall be reviewed and approved by the Government.

2. If the lands, easements, or rights-of-way are to be acquired by the Local Sponsor after the date of award of the first construction contract for the Project Modification, the credit shall be the fair market value of the interest at the time such interest is acquired. The fair market value shall be determined as specified in Article IV.a.1. of this Agreement. If the Local Sponsor pays an amount in excess of the appraised fair market value, it may be entitled to a credit for the excess if the Local Sponsor has secured prior written approval from the Government of its offer to purchase such interest.

3. If the Local Sponsor acquires more lands, easements, or rights-of-way than are necessary for project modification purposes, as determined by the Government, then only the value of such portions of those acquisitions as are necessary for project modification purposes shall be credited toward the Local Sponsor's share.

4. Credit for lands, easements, and rights-of-way in the case of involuntary acquisitions which occur within a one-year period preceding the date this Agreement is signed or which occur after the date this Agreement is signed will be based on court awards, or on stipulated settlements that have received prior written approval of the Government.

5. Credit for lands, easements, or rights-of-way acquired by the Local Sponsor within a five-year period preceding the date this Agreement is signed, or at any time after this Agreement is signed, will also include reasonable incidental costs of acquiring the interest, e.g., closing and title costs, appraisal costs, survey costs, attorney's fees, plat maps, and mapping costs, as well as the actual amounts expended for payment of any Public Law 91-646 relocation assistance benefits provided in accordance with the obligations under this Agreement.

b. The costs of relocations credited toward the Local Sponsor's share of total project modification costs shall be that portion of the actual costs as set forth below, and approved by the Government:

1. Highways and Highway Bridges: Only that portion of the cost as would be necessary to construct substitute bridges and highways to the design standard that the State of California would use in constructing a new bridge or highway under similar conditions of geography and traffic loads.

2. Utilities and Facilities (including railroads): Actual relocation costs, less depreciation, less salvage value, plus the cost of removal, less the cost of betterments. With respect to betterments, new materials shall not be used in any alteration or relocation if materials of value and usability equal to those in the existing facility are available or can be obtained as salvage from the existing facility or otherwise, unless the provision of new material is more economical. If, despite the availability of used material, new material is used, where the use of such new material represents an additional cost, such cost will not be included in total project modification costs, nor credited toward the Local Sponsor's share.

ARTICLE V - IMPLEMENTATION PHASING AND MANAGEMENT

a. To provide for consistent and effective communication

between the Local Sponsor and the Government during the period of implementation, the Local Sponsor and the Government shall appoint representatives to coordinate on scheduling, plans, specifications, modifications, contract costs, and other matters relating to implementation of the Project Modification. The Local Sponsor will be informed of any changes in cost estimates.

b. The representatives appointed above shall meet as necessary during the period of implementation and shall make such recommendations as they deem warranted to the Contracting Officer.

c. The Contracting Officer shall consider the recommendations of the representatives in all matters relating to implementation of the Project Modification, but the Contracting Officer, having ultimate responsibility for implementation of the Project Modification, has complete discretion to accept, reject, or modify the recommendations.

ARTICLE VI - METHOD OF PAYMENT

a. The Local Sponsor shall provide, during the period of implementation, the cash payments required under Article II of this Agreement. Total project modification costs are currently estimated to be $520,000. In order to meet its share, the Local Sponsor must provide a cash contribution currently estimated to be $130,000 less any credit received for the value of LERRD's pursuant to Article I. The dollar amounts set forth in this Article are based upon the Government's best estimates which will reflect projection of costs, price level changes, and anticipated inflation. Such cost estimates are subject to adjustments based upon costs actually incurred and are not to be construed as the total financial responsibilities of the Government and the Local Sponsor.

b. The Local Sponsor shall provide its required contribution in accordance with the following provisions:

1. For purposes of budget planning, the Government shall notify the Local Sponsor by October 15 of each year of the estimated funds that will be required from the Local Sponsor to meet its share of total project modification costs for the upcoming fiscal year.

2. No later than 60 calendar days prior to the commencement of the project modification, the Government shall notify the Local Sponsor of the Local Sponsor's share of the total project modification costs, including its share of costs attributable to the Project Modification incurred prior to the initiation of implementation, for the first fiscal year of implementation. No later than 30 calendar days thereafter, the

Local Sponsor shall provide the Government the full amount of the required contribution by delivering a check payable to "FAO, USAED, Sacramento" to the Contracting Officer representing the Government.

3. For the second and subsequent fiscal years of project implementation, the Government shall, no later that 60 calendar days prior to the beginning of the fiscal year, notify the Local Sponsor of the Local Sponsor's share of total project modification costs for that fiscal year. No later than 30 calendar days prior to the beginning of the fiscal year, the Local Sponsor shall make the necessary funds available to the Government through the funding mechanism specified in Article VI.b.2. of this Agreement. As implementation of the Project Modification proceeds, the Government shall adjust the amounts required to be provided under this paragraph to reflect actual costs.

4. If at any time during the period of implementation the Government determines that additional funds will be needed from the Local Sponsor, the Government shall so notify the Local Sponsor, and the Local Sponsor, no later than 45 calendar days from receipt of such notice, shall make the necessary funds available through the funding mechanism specified in Article VI.b.2. of this Agreement.

c. The Government will draw on the funds provided by the Local Sponsor such sums as the Government deems necessary to cover contractual and in-house fiscal obligations attributable to the Project Modification as they are incurred, as well as costs incurred by the Government prior to the initiation of the implementation period.

d. Upon completion of the Project Modification and final resolution of all relevant claims and appeals, the Government shall compute the total project modification costs and tender to the Local Sponsor a final accounting of the Local Sponsor's share of total project modification costs. In the event the total contribution by the Local Sponsor is less than its required share of total project modification costs, the Local Sponsor shall, no later than 90 calendar days after receipt of written notice, make a cash payment to the Government of whatever sum is required to meet its required share of total project modification costs.

e. If the Local Sponsor provides a cash contribution under this Agreement which exceeds what is required under this agreement, the Government shall, subject to the availability of funds, refund the excess to the Local Sponsor no later than 90 calendar days after the final accounting is complete.

ARTICLE VII - DISPUTES

Before any party to this Agreement may bring suit in any court concerning an issue relating to this Agreement, such party must first seek in good faith to resolve the issue through negotiation or other forms of non-binding alternative dispute resolution mutually acceptable to the parties.

ARTICLE VIII - OPERATION, MAINTENANCE, REPAIR, REPLACEMENT, AND REHABILITATION

a. After the Government has turned the completed Project Modification, or functional portion of the Project Modification, over to the Local Sponsor, the Local Sponsor shall operate, maintain, repair, replace, and rehabilitate the completed Project Modification, or functional portion of the Project Modification, in accordance with regulations or directions prescribed by the Government.

b. The Local Sponsor hereby gives the Government a right to enter, at reasonable times and in a reasonable manner, upon land which it owns or controls for access to the Project Modification for the purpose of inspection, and, if necessary, for the purpose of completing, operating, maintaining, repairing, replacing, or rehabilitating the Project Modification. If an inspection shows that the Local Sponsor for any reason is failing to fulfill its obligations under this Agreement without receiving prior written approval from the Government, the Government will send a written notice to the Local Sponsor. If the Local Sponsor persists in such failure for 30 calendar days after receipt of the notice, then the Government shall have a right to enter, at reasonable times and in a reasonable manner, upon lands the Local Sponsor owns or controls for access to the Project Modification for the purpose of completing, operating, maintaining, repairing, replacing, or rehabilitating the Project Modification. No completion, operation, maintenance, repair, replacement, or rehabilitation by the Government shall operate to relieve the Local Sponsor of responsibility to meet its obligations as set forth in this Agreement, or to preclude the Government from pursuing any other remedy at law or equity to assure faithful performance pursuant to this Agreement.

ARTICLE IX - RELEASE OF CLAIMS

The Local Sponsor shall hold and save the Government free from all damages arising from the implementation, operation, maintenance, repair, rehabilitation and replacement of the Project Modification, except for damages due to the fault or negligence of the Government or its contractors.

ARTICLE X - MAINTENANCE OF RECORDS

The Government and the Local Sponsor shall keep books, records, documents, and other evidence pertaining to costs and expenses incurred pursuant to this Agreement to the extent and in such detail as will properly reflect total project modification costs. The Government and the Local Sponsor shall maintain such books, records, documents, and other evidence for a minimum of three years after completion of implementation of the Project Modification and resolution of all relevant claims arising therefrom, and shall make available at their offices at reasonable times, such books, records, documents, and other evidence for inspection and audit by authorized representatives of the parties to this Agreement.

ARTICLE XI - GOVERNMENT AUDIT

The Government shall conduct an audit when appropriate of the Local Sponsor's records for the Project Modification to ascertain the allowability, reasonableness, and allocability of its costs for inclusion as credit against the non-Federal share of total project modification costs.

ARTICLE XII - FEDERAL AND STATE LAWS

In acting under its rights and obligations hereunder, the Local Sponsor agrees to comply with all applicable Federal and State laws and regulations, including section 601 of Title VI of the Civil Rights Act of 1964, Public Law 88-352, and Department of Defense Directive 5500.Il issued pursuant thereto and published in Part 300 of Title 32, Code of Federal Regulations, as well as Army Regulation 600-7, entitled "Nondiscrimination on the Basis of Handicap in Programs and Activities Assisted or Conducted by the Department of the Army".

ARTICLE XIII - RELATIONSHIP OF PARTIES

The parties in this Agreement act in an independent capacity in the performance of their respective functions under this Agreement, and neither party is to be considered the officer, agent, or employee of the other.

ARTICLE XIV - OFFICIALS NOT TO BENEFIT

No member of or delegate to the Congress, or resident commissioner, shall be admitted to any share or part of this Agreement, or to any benefit that may arise therefrom.

ARTICLE XV - COVENANT AGAINST CONTINGENT FEES

The Local Sponsor warrants that no person or selling agency has been employed or retained to solicit or secure this Agreement upon agreement or understanding for a commission, percentage, brokerage, or contingent fee, excepting bona fide employees or bona fide established commercial or selling agencies maintained by the Local Sponsor for the purpose of securing business. For breach or violation of this warranty, the Government shall have the right to annul this Agreement without liability, or, in its discretion, to add to the Agreement or consideration, or otherwise recover, the full amount of such commission, percentage, brokerage, or contingent fee.

ARTICLE XVI - TERMINATION OR SUSPENSION

a. If at any time the Local Sponsor fails to make the payments required under this Agreement, the Assistant Secretary of the Army (Civil Works) shall terminate or suspend work on the Project Modification until the Sponsor is no longer in arrears, unless the Assistant Secretary of the Army (Civil Works) determines that continuation of work of the Project Modification is in the interest of the United States or is necessary in order to satisfy agreements with any other non-Federal interests in connection with the Project Modification. Any delinquent payment shall be charged interest at a rate, to be determined by the Secretary of the Treasury, equal to 150 per centum of the average bond equivalent rate of the 13-week Treasury bills auctioned immediately prior to the date on which such payment becomes delinquent, or auctioned immediately prior to the beginning of each additional 3-month period if the period of delinquency exceeds 3 months.

b. If the Government fails to receive annual appropriations for the Project Modification in amounts sufficient to meet Project Modification expenditures for the then current or upcoming fiscal year, the Government shall so notify the Local Sponsor. After 60 calendar days either party may elect without penalty to terminate this Agreement pursuant to this Article or to defer future performance hereunder; however, deferral of future performance under this Agreement shall not affect existing obligations or relieve the parties of liability for any

obligation previously incurred. In the event that either party elects to terminate this Agreement pursuant to this Article, both parties shall conclude their activities relating to the Project and proceed to a final accounting in accordance with Article V of this Agreement. In the event that either party elects to defer future performance under this Agreement pursuant to this Article, such deferral shall remain in effect until such time as the Government receives sufficient appropriations or until either party elects to terminate this Agreement.

c. Notwithstanding any other provision of this Agreement, if the award for any contract for construction of the project would result in the total obligations and expenditures for construction of the Project Modification exceeding $520,000, the award of that contract and subsequent contracts shall be deferred until such time as both parties to this Agreement agree to resume construction of the Project Modification.

ARTICLE XVII - OBLIGATION OF FUTURE APPROPRIATIONS

Nothing herein shall constitute, or be deemed to constitute, an obligation of future appropriations by the legislature of the State of California when obligating future appropriations would be inconsistent with the State's constitutional or statutory limitations.

ARTICLE XVIII - HAZARDOUS SUBSTANCES

a. After execution of this Agreement and upon direction by the Contracting Officer, the Local Sponsor shall perform, or cause to be performed, such environment investigations as are determined necessary by the Government or the Local Sponsor to identify the existence and extent of any hazardous substances regulated under the Comprehensive Environmental Response, Compensation and Liability Act (CERCLA), 42 USC 9601-9675, on lands to be acquired or provided by the Local Sponsor for the Project Modification construction, operation, and maintenance. All actual costs incurred by the Local Sponsor which are properly allowable and allocable to performance of any such environmental investigations shall be included in total project modification costs and cost share in accordance with Section 1135(b) of Public Law 99-662, as amended.

b. In the event it is discovered through an environmental investigation or other means that any lands, easements, rights-of-way, or disposal areas to be acquired or provided by the Local Sponsor for the Project Modification contain any hazardous substances regulated under CERCLA, the Local Sponsor and the Government shall provide prompt notice to each other, and the Local Sponsor shall not proceed with the acquisition of such lands, easements, rights-of-way, or disposal areas until mutually

agreed.

c. The government and the Local Sponsor shall determine whether to initiate implementation of the Project Modification, or if already in implementation, to continue with implementation of the Project Modification, or to terminate implementation of the Project Modification for the convenience of the Government in any case where hazardous substances regulated under CERCLA are found to exist on any lands necessary for the Project Modification. Should the Government and the Local Sponsor determine to proceed or continue with construction after considering any liability that may arise under CERCLA, the Local Sponsor shall be responsible, as between the Government and the Local Sponsor, for any and all necessary clean up and response costs regarding lands it acquires or provides for the Project Modification, to include the costs of any studies and investigations necessary to determine and appropriate response to the contamination. Such costs shall not be considered a part of the total project modification costs as defined in the Agreement. In the event the Local Sponsor fails to provide any funds necessary to pay for clean up and response costs or to otherwise discharge its responsibilities under this paragraph upon direction by the Government, the Government may either terminate or suspend work on the Project Modification or proceed with further work as provided in Article XVI of this Agreement.

d. The Local Sponsor and the Government shall consult with each other under the Implementation Phasing and Management Article of this Agreement to assure that responsible parties bear any necessary cleanup and response costs as defined in CERCLA. Any decision made pursuant to Paragraph c. of this Article shall not relieve any party from any liability that may arise under CERCLA.

e. The Local Sponsor shall operate, maintain, repair, replace, and rehabilitate the Project Modification in a manner so that liability will not arise under the Comprehensive Environmental Response, Compensation and Liability Act (CERCLA), 42 USC 9601-9675.

ARTICLE XIX - NOTICES

a. All notices, requests, demands, and other communications required or permitted to be given under this agreement shall be deemed to have been duly given if in writing and delivered personally, given by prepaid telegram, or mailed by first-class (postage prepaid), registered, or certified mail, at follows:

If to the Local Sponsor:

California Department of Fish & Game
1416 Ninth Street, Room 1206-20
Sacramento, CA 95814

If to the Government:
U.S. Army Corps of Engineers
Sacramento District
1325 "J" Street
Sacramento, CA 95814

b. A party may change the address to which such communications are to be directed by giving written notice to the other party in the manner provided in this article.

c. Any notice, request, demand, or other communication made pursuant to this Article shall be deemed to have been reviewed by the addressee at such time as it is personally delivered or seven calendar days after it is mailed, as the case may be.

ARTICLE XX - CONFIDENTIALITY

To the extent permitted by the laws governing each party, the parties agree to maintain the confidentiality of exchanged information when requested to do so by the providing party.

IN WITNESS WHEREOF, the parties hereto have executed this Agreement, which shall become effective upon the date it is signed by the Assistant Secretary of the Army (Civil Works).

THE DEPARTMENT OF THE ARMY

BY: [SIGNATURE] LTC EN

For:

John N. Reese, COL, EN
[TYPED NAME]

Assistant Secretary of the Army (Civil Works)

DATE: 18 April 95

THE DEPARTMENT OF FISH AND GAME

BY: [SIGNATURE]

Mr. Boyd Gibbons
[TYPED NAME]

Director, Department of Fish and Game, State of California

DATE: 11/30/94

CERTIFICATE OF AUTHORITY

I, CRAIG MANSON, do hereby certify that I am the principal legal officer of the California Department of Fish and Game, that the Department of Fish and Game is a legally constituted public body with full authority and legal capability to perform the terms of the Agreement between the Department of the Army and the Department of Fish and Game in connection with the Project Modification, and to pay damages, if necessary, in the event of the failure to perform, in accordance the Section 221 of Public Law 91-611, and that the persons who have executed this Agreement on behalf of the Department of Fish and Game have acted within their statutory authority.

IN WITNESS HEREOF, I have made and executed this certification this 24th day of October, 1994.

Mr. Craig Manson
General Counsel, California
Department of Fish and Game

Date: 24 Oct 1994

CERTIFICATION REGARDING LOBBYING

The undersigned certifies, to the best of his or her knowledge and belief that:

(1) No Federal appropriated funds have been paid or will be paid, by or on behalf of the undersigned, to any person for influencing or attempting to influence an officer or employee of any agency, a Member of Congress, and officer or employee of Congress, or an employee of a Member of Congress in connection with the awarding of any Federal contract, the making of any Federal grant, the making of any Federal loan, the entering into of any cooperative agreement, and the extension, continuation, renewal, amendment, or modification of any Federal contract, grant, loan, or cooperative agreement.

(2) If any funds other than Federal appropriated funds have been paid or will be paid to any person for influencing or attempting to influence an officer or employee of any agency, a Member of Congress, an officer or employee of Congress, or an employee of a Member of Congress in connection with this Federal contract, grant, loan, or cooperative agreement, the undersigned shall complete and submit Standard Form-LLL, "Disclosure Form to Report Lobbying, " in accordance with its instructions.

(3) The undersigned shall require that the language of this certification be included in the award documents for all subawards at all tiers (including subcontracts, subgrants, and contracts under grants, loans, and cooperative agreements) and that all subrecipients shall certify and disclose accordingly. The certification is a material representation of fact upon which reliance was placed when this transaction was made or entered into. Submission of the certification is a prerequisite for making or entering into this transaction imposed by Section 1352, Title 31, U.S. Code. Any person who fails to file the required certification shall be subject to a civil penalty of not less the $10,000 and not nor than $100,000 for each such failure.

Boyd Gibbons

Mr. Boyd Gibbons
Director, California Department
of Fish and Game

Date: 11/30/94

Exhibit F-2

Assurance Agreement Between California Department of Fish and Game, California Department of Water Resources, and State Reclamation Board

AGREEMENT

AMONG

CALIFORNIA DEPARTMENT OF FISH AND GAME

CALIFORNIA DEPARTMENT OF WATER RESOURCES

AND

THE RECLAMATION BOARD OF THE STATE OF CALIFORNIA

REGARDING

YOLO BASIN WETLANDS

WHEREAS, The Reclamation Board ("Board") entered into a Memorandum of Understanding with the U.S. Army Corps of Engineers ("Corps") on November 30, 1953, setting forth the responsibilities of the Board for the Sacramento River Flood Control Project ("SRFCP"), including the Yolo Bypass; and

WHEREAS, in the 1953 Memorandum of Understanding, the Board agreed to hold and save the United States free from claims for damages resulting from construction of the works and to maintain and operate all works after their completion; and

WHEREAS, in 1955, the Corps promulgated an Operation and Maintenance Manual for SRFCP, including the Yolo Bypass, which requires specified maintenance including the following:

- Maintaining the channel and floodway clear of debris, weeds, and wild growth; and

- Maintaining the channel and floodway such that there is no restriction by deposition of waste materials, building of unauthorized structures or other encroachments; and

- Maintaining the channel and the floodway in such a way that the capacity is not reduced by the formation of shoals; and

- Weeds and other plant growth in the channel and floodway are to be cut in advance of the flood season, and together with all debris, removed from the channel and floodway; and

WHEREAS, the Corps recognizes that the 1955 SRFCP Operation and Maintenance Manual will be modified to direct the Department of Fish and Game ("DFG") to be responsible for maintenance within the boundaries of the project modification, and that maintenance activities will be different than those presented in 1955, but consistent with the purposes of public safety; and

WHEREAS, floodwaters in the Yolo Bypass flowed at or above design capacity during February 1986; and

WHEREAS, DFG has entered into a Local Cooperation Agreement with the Corps for a modification of SRFCP, including the development of wetlands, uplands, riparian woodland, and related habitats ("Project Modification"); and

WHEREAS, pursuant to this LCA, DFG will be assuming various operation and maintenance obligations and holding the United States harmless from claims arising out of the Project Modification; and

WHEREAS, Water Code Section 8618 authorizes DFG to enter into an agreement with the Board obligating DFG to do and perform those things required of the State by federal law for SRFCP, and for DFG to assume responsibility for all claims of damage or liability made against the State and its agencies or the United States arising from the Project Modification; and

WHEREAS, pursuant to Water Code Section 8360, the Department of Water Resources ("DWR") has supervisory powers over the maintenance and operation of SRFCP, of which the Yolo Bypass is a part; and

WHEREAS, pursuant to Water Code Section 8361, DWR has the direct obligation to maintain the Yolo Bypass; and

WHEREAS, DWR, the Board, DFG and the Corps believe that the Project Modification can be compatible with flood control; and

WHEREAS, the respective parties hereto wish to clarify the operation, maintenance, and other obligations for that portion of the Yolo Bypass Project affected by the Project Modification; and

WHEREAS, the Board is allowing wetlands to become established in an area of the Bypass formerly used for agricultural purposes; and

WHEREAS, DFG, DWR, and the Board agreed to enter into this Agreement in lieu of an encroachment permit; and

WHEREAS, it is the intent to make this Agreement a part of the Project Modification Operations and Maintenance Manual.

NOW THEREFORE, THE PARTIES HEREBY AGREE AS FOLLOWS:

1. The Parties agree to cooperate in the operation and maintenance of the portion of SRFCP affected by the Project Modification; and

2. DWR shall continue to maintain the levees pursuant to the Corps' 1955 Operation and Maintenance Manual; and

3. DFG will monitor, operate, maintain, repair, replace, and reconstruct ("manage") the Yolo Bypass channel in the Project Modification area pursuant to the Corps' Project Modification Operation and Maintenance Manual; and

4. DWR and the Board shall have only oversight responsibility for management of the Project Modification, unless DFG fails to perform such management; and

5. Before undertaking any management actions necessary for public safety purposes, DWR shall contact the DFG Regional Manager by telephone or telefax and by letter thirty (30) days prior to any work during non-flood season; and

6. During flood season, DWR need only notify the DFG, Region 2, Regional Manager by telephone or telefax prior to performing the work; and

7. DFG agrees to hold the Board and DWR harmless and assumes responsibility for all claims of damage or liability made against DWR or the Board arising in any way from the construction, operation and maintenance of the Project Modification; and

8. DWR will continue to operate SRFCP for which it has responsibility, including the Yolo Bypass; and

9. If the Board receives State authorization for a future flood control project in the Yolo Bypass that covers the geographical area of the Project Modification, DFG shall seek State authorization for cosponsorship and funding for mitigation through the annual budget process of that part of the project consisting of the areal extent of the Project Modification, which is the subject of this Agreement; and

10. Prior to any construction in the Yolo Bypass, DFG shall submit four sets of complete plans and specifications for the Board's and DWR's review, comment, and recommendations; and

11. DFG shall not allow commencement of construction prior to receiving, and incorporating to the extent feasible as determined by the Corps, in consultation with DFG, the Board's recommendations on the submitted plans and specifications.

12. This Agreement may be executed in several duplicate counterparts, each of which shall be an original.

California Department of Fish and Game

By:_____ Date:_____
Boyd H. Gibbons, Director

The Reclamation Board

By:_____ Date:_____
Wallace McCormack, President

California Department of Water Resources

By:_____ Date:_____
David N. Kennedy, Director

Exhibit F-3
Memorandum of Understanding, Threatened and Endangered Species

STATE OF CALIFORNIA—THE RESOURCES AGENCY

PETE WILSON, Go

THE RECLAMATION BOARD
1416 Ninth Street, Room 1148
Sacramento, CA 95814-5509
(916) 653-5434 FAX: (916) 653-9745
Permits: (916) 653-5726 FAX: (916) 653-5805

AUG 1 0 1995

Mr. Michael W. Stearns, President
The Reclamation Board
1416 Ninth Street, Room 1148
Sacramento, California 95814

Mr. C. F. Raysbrook
Interim Director
Department of Fish and Game
1416 Ninth Street, 12th Floor
Sacramento, California 95814

Mr. Wayne S. White
State Supervisor
U.S. Fish and Wildlife Service
2800 Cottage Way, Room E1803
Sacramento, California 95825

Mr. David N. Kennedy, Director
Department of Water Resources
1416 Ninth Street, Room 1115-1
Sacramento, California 95814

Gentlemen:

In March 1994, the Memorandum of Understanding Regarding Threatened and Endangered Species in the Yolo Basin Wetlands Project was signed by the Directors of the Department of Fish and Game, Department Water Resources; the President of The Reclamation Board; and the State Supervisor for the U.S. Fish and Wildlife Service (copy enclosed). At that time, only the Putah Creek Sinks site had been acquired by DFG.

Later in 1994, DFG acquired the 180-Acre Unit located in the western portion of the Yolo Bypass and connecting the Putah Creek Sinks site with the previously acquired Causeway Site for which a separate agreement was executed on April 18, 1994.

Please signify your concurrence with the inclusion of the 180-Acre Unit in the above-mentioned MOU by signing the four original copies of this letter in the space provided. To expedite the process, Board staff is hand-carrying this document; therefore, please contact Margery Nagel at (916) 327-1541 to ensure delivery to the next signatory. One fully signed original will be returned to you.

If you have any questions, please contact me at (916) 653-5434.

Original signed by
Raymond E. Barsch

Raymond E. Barsch
General Manager

CONCUR:

ORIGINAL SIGNED BY

Michael W. Stearns, President
The Reclamation Board

Date AUG 1 1 1995

CONCUR:

ORIGINAL SIGNED BY

C. F. Raysbrook
Interim Director
Department of Fish and Game

Date AUG 1 5 1995

CONCUR:

ORIGINAL SIGNED BY

Wayne White, State Supervisor
U.S. Fish and Wildlife Service

Date AUG 1 7 1995

CONCUR:

ORIGINAL SIGNED BY

David N. Kennedy, Director
Department of Water Resources

Date AUG 1 8 1995

Enclosure

cc: (See attached list.)

Exhibit F-3
Sheet 2 of 10

STATE OF CALIFORNIA—THE RESOURCES AGENCY

PETE WILSON, Governc

THE RECLAMATION BOARD
6 Ninth Street, Room 455-6
Sacramento, CA 95814-5594
(916) 653-5434 FAX: (916) 653-5805

JAN 3 1 1994

1. Mr. Wallace McCormack, President
The Reclamation Board
1416 Ninth Street, Room 455-6
Sacramento, California 95814

2. Mr. David N. Kennedy, Director
Department of Water Resources
1416 Ninth Street, Room 1115-1
Sacramento, California 95814

3. Mr. Boyd H. Gibbons, Director
Department of Fish and Game
1416 Ninth Street, 12th Floor
Sacramento, California 95814

4. Mr. Wayne S. White
State Supervisor
U.S. Fish and Wildlife Service
2800 Cottage Way, Room E1803
Sacramento, California 95825

Gentlemen:

Enclosed for your signature is the Memorandum of Understanding Regarding Threatened and Endangered Species in the Yolo Basin Wetlands Project. This MOU was developed among The Reclamation Board, the Department of Water Resources, the Department of Fish and Game, and the U.S. Fish and Wildlife Service. The MOU was developed to confirm and clarify understandings, agreements, representations, and commitments with respect to threatened and endangered species that exist or could occur in the Corps of Engineers' Yolo Basin Wetlands Project--Putah Sinks site. All parties have expressed their concurrence for the MOU and it was also approved by the Board at its December 20, 1993 meeting.

A future formal signing ceremony is being organized; however, please sign each of the four copies to maintain the project schedule. After the final signature is received, a fully executed copy will be returned to you. To expedite the process, the Board is hand-carrying this MOU; therefore, please contact Margery Nagel at (916) 327-1541 to ensure the document is personally delivered to the next signatory.

If you have any questions, please contact me at (916) 653-5434.

Sincerely,

ORIGINAL SIGNED BY

Raymond E. Barsch
General Manager

Enclosures

cc: Mr. Douglas P. Wheeler
Secretary for Resources
The Resources Agency
1416 Ninth Street, Room 1311
Sacramento, California 95814

Colonel John N. Reese
District Engineer
Sacramento District
U.S. Army Corps of Engineers
1325 J Street
Sacramento, California 95814-2922

MEMORANDUM OF UNDERSTANDING
REGARDING THREATENED AND ENDANGERED SPECIES IN THE YOLO BASIN WETLANDS PROJECT

The Reclamation Board (Board), the Department of Water Resources (DWR), the California Department of Fish and Game (DFG), and the United States Fish and Wildlife Service (USFWS) (all hereinafter referred to collectively as the Parties) have entered this Memorandum of Understanding (MOU) to confirm and clarify their understanding, agreements, representations, and commitments with respect to threatened and endangered species that exist or could occur in the Yolo Basin Wetlands Project - Putah Sinks site and the administration of the federal Endangered Species Act (16 U.S.C. § 1531 et seq.) and the California Endangered Species Act (Fish and Game Code § 2050 et seq.) (together, the Acts), and to facilitate the successful avoidance of adverse impacts to public safety as it relates to flood control.

EXPLANATORY RECITALS

1. The U.S. Army Corps of Engineers (Corps) and DFG have approved an undertaking consisting of the modification of a federally authorized flood control project. The project modification provides for the restoration, enhancement, and maintenance of wetlands and other habitats. The project modification, located within the Yolo Bypass, a feature of the Sacramento River Flood Control Project (SRFCP), is described in detail in the "Project Modification Report and Environmental Assessment/Initial Study (April 1992)."

2. The Corps is developing an Operation and Maintenance (O&M) Manual for the project modification. Upon its acceptance of the completed project from the Corps, DFG, or its assignee will be required to operate, maintain, repair, replace, and rehabilitate (hereinafter referred to collectively as manage) the completed project in accordance with the O&M Manual.

3. The Board has the obligation to operate and maintain the Yolo Bypass, and DWR has obligations to maintain the Yolo Bypass under California Water Code Section 8361.

4. The Board is required by agreement and California Water Code Section 8710 to prohibit encroachments or activities that will adversely affect the capacity, operation and maintenance of flood control works such as the Yolo Bypass. An agreement between DFG and the Board pursuant to Water Code Section 8618 will be necessary for the implementation of the project modification, in lieu of a Board encroachment permit.

5. Based upon their formal and informal communications, and in recognition of the importance of the Parties' respective obligations and missions under state and federal law, the Parties have determined that it is desirable to confirm their understanding and agreement with respect to threatened and endangered species that may occur now or in the future in the project area.

6. The Parties acknowledge that substantial effort has been made to avoid negative effects on flood control, and the project modification can be made compatible with flood control.

7. DFG and USFWS have responsibility for implementing the Acts, including, the review and approval of management plans and habitat conservation plans.

8. As described in paragraphs 11-14, DFG and USFWS consider the likelihood that threatened or endangered species will impede proper operation and maintenance of the SRFCP to be remote. The Parties agree, however, that it is appropriate to enter into this MOU to define their understanding and agreement with respect to threatened and endangered species resulting from the proposed project modification of the Yolo Bypass to restore and maintain wetlands and other habitat.

REPRESENTATIONS AND COMMITMENTS

9. All Parties acknowledge the substantial environmental benefits to be provided by the project modification. At the same time, however, all Parties recognize that the primary purpose of the Yolo Bypass is to provide for the protection of public health and safety and the protection of property, and that the project modification is subordinate to purposes of the SRFCP.

10. DFG and USFWS recognize that proper operation of the SRFCP requires maintenance in accordance with the O&M Manual and that maintenance shall be an integral part of the project modification.

11. DFG and USFWS have determined that currently the project modification area provides, or may provide, habitat during all or certain times of the year, for certain threatened and endangered species, including the Swainson's hawk and the giant garter snake. DFG and USFWS have determined that following the project modification of the Yolo Bypass to restore wetlands and uplands habitat the area may provide potential habitat for these species and other species that either are listed or may be a candidate for listing, including, but not limited to, the valley elderberry longhorn beetle, greater sandhill crane, tricolored blackbird, and black rail. During inundation in flood years, the Yolo Bypass provides a corridor of travel for winter-run chinook salmon. These species may occur in the area after the project modification. DFG and USFWS have determined, based on the information currently available, that the project modification, including management in accordance with the O&M Manual, is not expected to result in a long-term adverse impact to any state-listed or federally-listed threatened or endangered species. Nor should the project modification and management result in any violations of the Migratory Bird Treaty Act (16 U.S.C. § 703 et seq.).

12. DFG and USFWS are of the opinion that the project modification, including management in accordance with the O&M Manual, will provide a net benefit for the environment and for species that may become established in the area of the project modification, and that the long-term environmental benefits to those species outweigh the short-term negative impact that may occur due to habitat management that is for flood control purposes. The project modification is similar in nature to management plans and habitat conservation plans developed for multiple species.

13. DFG and USFWS have reviewed, in depth, all the activities proposed for the management of the project modification in the December 1993 draft O&M Manual, which the Corps has represented to be an ninety percent complete O&M Manual. In the professional judgment of DFG and USFWS, these activities will not threaten in any significant way the existence of species described in paragraph 11 or result in the destruction or adverse modification of habitat that would be considered necessary to the continued existence of such species.

Further, DFG and USFWS have determined that the potential to take such species incidental to management of the project modification does exist. Loss of individuals may occur as a result of implementing the project modifications. DFG and USFWS have determined that if management activities outlined in the O&M Manual are fully implemented and adhered to, then the adverse impacts of "incidental take" will be minimized. DFG and USFWS have not, however, considered the effects of any additional conditions that may be contained in the final O&M Manual or in an encroachment permit or agreement entered into under Section 8618 of the Water Code. If the final O&M Manual, an encroachment permit issued by the Board, or an agreement under Section 8618 of the Water Code contains requirements, terms, or conditions which affect the conclusions in this MOU, DFG and USFWS will so advise DWR and the Board.

14. Management of the project modification area will take into consideration the specific habitat requirements of the giant garter snake and Swainson's hawk, but the area will not be specifically managed for any other listed or candidate species. Consideration of the habitat needs of the giant garter snake and Swainson's hawk will not impair management in accordance with the O&M Manual.

15. Despite the foregoing, the Parties understand and agree that it is not possible to achieve absolute certainty as to events in the future. For example, laws may change, new facts may come to light, and currently unknown or unanticipated species may be listed as threatened or endangered or otherwise become protected or become established in the project modification area. In recognition of that uncertainty, whatever its magnitude, the Parties agree to cooperate to resolve all endangered species concerns expeditiously and in a manner consistent with applicable law, including laws affecting the SRFCP, and the primary purpose of the SRFCP.

16. By August 1 of each year, DFG will report to the Board and USFWS the occurrence of any known threatened or endangered species in the project area. The report will identify any potential for take of the listed species or other conflict that could occur as a result of management in accordance with the O&M Manual, and will outline the measures that will be taken, with a time schedule, to resolve the conflict, if any.

DFG could also become aware at some time in the future: a) that a threatened or endangered species not contemplated at this time has come to inhabit the project modification area and that the presence of the species could potentially interfere with management in a manner not contemplated at this time; or b) that management of the completed project in accordance within the O&M Manual otherwise has impacts on threatened or endangered species not currently

anticipated, such that a potential for conflict with flood control exists. Recognizing that the absence of management may create adverse impacts for flood control, DFG agrees that in such circumstances, it will give notice to DWR, the Board, the Corps, and USFWS within three working days. Within seven working days after the notice, representatives of the Parties will visit the site of the project modification, and will act as expeditiously as possible and consistent with applicable law to facilitate management that will not have an adverse impact on flood control.

17. In recognition of the primary purpose of the SRFCP, the Parties will observe special procedures in the event of flood control emergencies. For the purposes of this MOU, a flood control emergency is defined as a sudden and unexpected occurrence or set of circumstances which poses an imminent threat to public health and safety or property from floodwaters as determined by the Board, DWR, or the Corps. It is not expected that the measures necessary to alleviate a flood control emergency or eliminate an imminent threat are likely to present additional or unique issues with respect to threatened or endangered species, and the Parties anticipate that imminent flood control emergencies can be resolved without triggering the substantive requirements of the Acts. If, however, it is determined that the measures necessary to alleviate an imminent flood control emergency or eliminate an imminent threat could result in the take of a threatened or endangered species or otherwise trigger the substantive requirements of the Acts, the Parties will immediately confer, in person or by telephone, and will resolve the issue as quickly as permitted by applicable law.

18. This MOU will remain in effect until amended, revised, or revoked by the written agreement of the Parties. The Parties will, as necessary and in keeping with the purposes and intent of this MOU renegotiate the terms of this MOU in good faith based on experience in its operation and changing circumstances.

19. No party shall incur any additional fiscal obligations under this MOU.

20. This MOU may be executed in several duplicate counterparts, each of which shall be an original.

Dated: Feb 3 1994

THE RECLAMATION BOARD

By Wallace McCormack

Wallace McCormack
President

Dated: 3/7/94

CALIFORNIA DEPARTMENT OF WATER RESOURCES

By

David Kennedy
Director

Dated: Feb 11, 1994

CALIFORNIA DEPARTMENT OF FISH AND GAME

By

Boyd Gibbons
Director

Dated: 3/11/94

UNITED STATES FISH AND WILDLIFE SERVICE

By

Wayne S. White
State Supervisor

Exhibit F-3
Sheet 10 of 10

Exhibit F-4
U.S. Fish and Wildlife Service Biological Opinion

United States Department of the Interior

FISH AND WILDLIFE SERVICE

IN REPLY REFER TO:

Ecological Services
Sacramento Field Office
3310 El Camino Avenue, Suite 130
Sacramento, California 95821-6340

1-1-97-F-0001

October 28, 1996

Mr. Larry Vinzant
Chief, San Joaquin Valley Office
Department of the Army
U.S. Army Engineer District,
Sacramento Corps of Engineers
Sacramento, CA 95814-2922

Subject: Formal Section 7 Consultation on the Yolo Basin Wetlands Project: Davis Site, Administrative Area, and 180-Acre Site, Yolo County, California.

Dear Mr. Vinzant:

This document transmits the U.S. Fish and Wildlife Service's (Service) biological opinion based on a review of the Yolo Basin Wetlands Project: Davis Site, Administrative Area, and the 180-Acre Unit, and its effects on the threatened giant garter snake *(Thamnophis gigas)*, in accordance with section 7 of the Endangered Species Act of 1973, as amended (Act) (16 U.S.C. 1531 *et seq.)*. Your October 8, 1996, request for formal consultation was received on October 11, 1996.

This biological opinion is based on information provided in: (1) the U.S. Army Corps of Engineers' (Corps) March 1992 Biological Data Report, Yolo Basin Wetlands, Sacramento River; (2) the Corps' Environmental Assessment/Initial Study of April 1992 for the Yolo Basin Wetlands, Sacramento River; (3) the Corps' Project Modification Report and Environmental Assessment of June 1994 for Yolo Basin Wetlands, Davis Site; (4) the July 1995 Yolo Basin Wetlands Sacramento River, 180-Acre Unit - Access Road and Borrow Areas; (5) the September 1995 Yolo Basin Wetlands Sacramento, Administrative Area; (6) the August 1996 Draft Supplemental Fish and Wildlife Coordination Act Report for the Yolo Basin Wetlands Project, Davis Site; and (7) site visits by Service staff on September 30, 1996, and October 8, 1996. A complete administrative record of this consultation is on file at the Service's Sacramento Field Office.

Consultation History

The original Yolo Basin Wetlands Project proposed to restored 3,886 acres of wetlands in the Yolo Bypass, between the cities of Davis and Sacramento, and received a letter of concurrence from the Service on April 10, 1992. A letter of concurrence was issued by the Service on November 21, 1995, for the Administrative Area, however the project scope now includes in-water work and needs to be incorporated in a full biological opinion. In addition, the Service issued a letter of concurrence on October 4, 1996, for the groundbreaking ceremony, scheduled for October 9, 1996, at the Davis Site. This biological opinion is for three modifications to the original Yolo Basin

Wetlands project which (1) change the location of the 396-acre unit known as the Davis Site, 2) add a 180-acre unit (Access Road and Borrow Areas), and (3) add a 13.5-acre unit (Administrative Area).

BIOLOGICAL OPINION

Description of the Proposed Action

The Corps is proposing to restore wetland habitat as a modification of the Sacramento River Flood Control Project. The project is proposed for an area immediately west, and contiguous to the Yolo Bypass. It is bordered on the south and west sides by the Willow Slough Bypass. The site is 12 miles west of the city of Sacramento, and 1 mile east of the city of Davis corporate limits.

The Davis Site is 396 acres in size, and would be constructed on lands currently used for agriculture. The restoration plan is to develop 219.0 acres of permanent wetland, 54.0 acres of riparian woodland, 44.0 acres of seasonal wetland, and 54.0 acres of upland/herbaceous cover. The remaining 25 acres will be developed into roads. The structural components of the project include low berms, canals, gates and pumps for water management, and trails, parking areas, and roads for operation and maintenance access.

The primary water source for the proposed wetland area will be reclaimed wastewater effluent from the city of Davis Water Pollution Control Plant. Stormwater also would be conveyed to the wetlands from a point in the city's storm drainage system near the site. The wastewater and stormwater would be diverted from Willow Slough Bypass to flow through the wetlands. Water will leave the treatment plant through a new 36-inch, 6,000-foot-long pipeline installed underneath an existing road for distribution to the wetland. A water outlet structure is planned for near the intersection of the Willow Slough Bypass channel and the Yolo Bypass. This structure will be used to regulate water depths and assist in providing for water circulation within the Davis Site.

The wetlands to be constructed would include a 10-acre wastewater lagoon and a 37-acre storm water lagoon, which would be used to store and mix the available water sources for the wetlands. A conveyance channel would carry secondary treated wastewater effluent from the plant to the project's wastewater lagoon for distribution to the wetlands. The wastewater will either discharge directly to the wetlands or blend with available stormwater before discharge to the wetlands. From the lagoons, water would flow into a series of ponds interspersed with berms and islands, through which the water will filter. At the northeast corner of the site, the water will exit the wetland as tertiary treated water and will either be recirculated to the wetlands, reclaimed by the Conaway Ranch for agricultural operations, or be discharged into the Yolo Bypass.

The 180-acres will connect the two major units which comprise the original Yolo Basin Wetlands project, the Yolo Causeway Unit (390 acres) and the Putah Creek Sinks Unit (3,100 acres). A permanent road atop an embankment will be constructed to provide access for construction equipment and routine maintenance. Fill material required for road construction will be excavated from borrow areas within the 180-acre unit.

The 13.5-acre Administrative Area would consist of an office building, an equipment maintenance shop and indoor storage building, a single family residence, a public parking lot, and an outdoor equipment storage and work

area. The facility would be owned and operated by the California Department of Fish and Game and would support management of the habitat areas of the Yolo Basin Wetlands Project.

The city of Davis is the non-Federal sponsor for the restoration project and would operate and maintain the wetlands at the Davis Site in accordance with a detailed Operation and Maintenance Manual that will be prepared by the Corps of Engineers.

Natural Resources

The Davis Site parcel proposed for restoration is located just outside the levees of the Yolo and Willow Slough Bypasses and has been intensively farmed to produce sugar beets and grains. The upland vegetation is typically annual grasses and forbs growing throughout the parcel and on the levee slope where maintenance activities are not restrictive.

There are 2.0 acres of seasonal wetland habitat on the parcel, consisting of irrigation delivery and drainage ditches. Cattails (*Typha* sp.) are the dominant vegetation growing in the seasonal wetlands (ditches) along the landward toe of the Willow Slough and Yolo Bypass levees. Maintenance (i.e., burning, spraying, or discing) of the levee and agricultural ditches generally inhibits development of woody riparian vegetation. During our site visits, it was observed that the entire levee area from toe to toe had been disced and was devoid of any vegetation.

The western property boundary is defined by an irrigation canal which is heavily vegetated with cattails and waterprimrose (*Ludwigia peploides*). We observed several crayfish (*Procambarus* sp.) and an abundance of mosquito fish (*Gambusia* sp.) in this canal during our site visit of September 30, 1996. The northern property boundary is defined by another irrigation canal which extends into the rice farming irrigation system to the west and discharges into the Yolo Bypass to the east. This canal was intermittently vegetated with bullrush (*Scirpus* sp.), cattails, and waterprimrose.

The 180-acre unit is currently used for agriculture. The parcel has been laser-leveled so most of the natural topography is gone. The property is surrounded by irrigation supply ditches, toe drains and levees adjacent to Interstate Highway 80.

The 13.5-acre unit is currently used for agriculture and four residential units. The southern boundary of the parcel is adjacent to a 40-foot wide drainage canal.

The irrigation canals and vegetated ditches adjacent to all three parcels provide potential habitat for the State and federally listed giant garter snake (*Thamnophis gigas*).

Proposed Mitigation

The Yolo Basin Wetlands project is designed to be beneficial in nature by increasing habitat for wildlife and does not propose to mitigate for specific habitat losses. The following habitats are proposed to be created:

Permanent Wetlands. Permanent wetlands would be constructed throughout the site and would be maintained using reclaimed water year-round. These areas would be about six feet deep to preclude emergent vegetation growth. The actual depth will be determined by the operators based on the time of year,

vegetation conditions; during the summer months a minimum depth of three feet will be maintained. Several islands with, and without, shallow perimeters would be constructed in these wetlands. The emphasis for vegetation on these islands would be for upland/herbaceous cover, although some woody riparian vegetation would be established on some portions of these islands.

Seasonal Wetlands. Seasonal wetlands would be constructed around the shallow margins of the islands and various tracts in the southern end of the site. They would be managed to provide seasonal habitat and feeding areas for wildlife.

Riparian forest. The west, south, and east perimeter of the site, as well some islands would be revegetated with woody riparian plant species.

Upland/herbaceous. Upland/herbaceous cover would consist of annual grasses and forbs located on the islands, along the north boundary of the site, and on a large tract on the west side of the site.

To mitigate for giant garter snake, the project proponent would:

1. Monitor annually for the presence of the giant garter snake and provide this information to the Service.

2. Develop management plans based on the assumption that the snake is present, which would be reviewed and approved by the Service.

3. Limit maintenance activity in the waterways to May 1 - October 1.

Status of the Species

The giant garter snake is one of the largest garter snakes, reaching a total length of at least 160 cm. Females tend to be slightly longer and stouter than males. The mass of adult female giant garter snakes is typically 500-700 gg. Dorsal background coloration varies from brownish to olive with a checkered pattern of black spots, separated by a yellow dorsal stripe and two light colored lateral stripes. Background coloration and prominence of black checkered pattern and the three yellow stripes are geographically and individually variable (Hansen 1980). The ventral surface is cream to olive or brown and sometimes infused with orange, especially in northern populations.

Endemic to wetlands in the Sacramento and San Joaquin valleys, the giant garter snake inhabits marshes, sloughs, ponds, small lakes, low gradient streams, and other waterways and agricultural wetlands, such as irrigation and drainage canals and rice fields. Giant garter snakes feed on small fishes, tadpoles, and frogs (Fitch 1941, Hansen 1980, Hansen 1988). Habitat requisites consist of (1) adequate water during the snake's active season (early-spring through mid-fall) to provide food and cover; (2) emergent, herbaceous wetland vegetation, such as cattails and bulrushes, for escape cover and foraging habitat during the active season; (3) grassy banks and openings in waterside vegetation for basking; and (4) higher elevation uplands for cover and refuge from flood waters during the snake's dormant season in the winter (Hansen 1980). Giant garter snakes are absent from larger rivers and other water bodies that support introduced populations of large, predatory fish, and from wetlands with sand, gravel, or rock substrates (Hansen 1980, Rossman and Stewart 1987, Brode 1988, Hansen 1988). Riparian woodlands do not provide suitable habitat because of excessive shade, lack of basking sites, and absence of prey populations (Hansen 1980).

The giant garter snake inhabits small mammal burrows and other soil crevices

above prevailing flood elevations throughout its winter dormancy period (November to mid-March). Giant garter snakes typically select burrows with sunny exposure along south and west facing slopes. The breeding season extends through March and April, and females give birth to live young from late July through early September (Hansen and Hansen 1990). Brood size is variable, ranging from 10 to 46 young, with a mean of 23 (Hansen and Hansen 1990). Young immediately scatter into dense cover and absorb their yolk sacs, after which they begin feeding on their own. Although growth rates are variable, young typically more than double in size by one year of age (G. Hansen, pers. comm.). Sexual maturity averages three years in males and 5 years for females (G. Hansen, pers. comm.).

Fitch (1940) described the historical range of the species as extending from the vicinity of Sacramento and Contra Costa Counties southward to Buena Vista Lake, near Bakersfield, in Kern County. Prior to 1970, the giant garter snake was recorded historically from 17 localities (Hansen and Brode 1980). Five of these localities were clustered in and around Los Banos, Merced County, and the paucity of information makes it difficult to determine precisely the species' former range. These records coincide with the historical distribution of large flood basins, fresh water marshes, and tributary streams.

The giant garter snake currently is only known from a small number of populations. The status of these populations and the threats to these snakes and their habitats are detailed in the final rule that listed the giant garter snake as threatened (Service 1994). The largest extant population of the giant garter snake inhabits extensive agricultural lands in the American Basin, a large flood basin at the confluence of the Sacramento and American rivers, in Sacramento and Sutter counties. Throughout this area, reconnaissance level surveys indicate that about 570 hectares of giant garter snake habitat exist in the form of man-made irrigation channels and drainage ditches, and an undetermined acreage of suitable habitat within approximately 5,260 hectares of adjoining rice fields.

Environmental Baseline

The giant garter snake is endemic to the Sacramento and San Joaquin valleys where it inhabits sloughs, low-gradient streams, and other waterways, such as irrigation ditches and manmade waterways. It's primary habitat requirements are: (1) enough water during the active (spring, summer, fall) season to supply food and cover, (2) grassy banks for basking, (3) emergent vegetation for cover during the active season, and (4) high ground or uplands that provide cover and refuge from flood waters during the dormant (winter) season.

Giant garter snake populations in Yolo County utilize emergent marshes, flooded rice fields, and irrigation canals for habitat. Giant garter snakes have been observed in the South Fork of Putah Creek, which empties into the Yolo Bypass, in irrigation canals two miles from the project area, and in Willow Slough.

A number of land use practices and other human activities currently threaten the survival of the giant garter snake throughout the remainder of its range. Although some giant garter snake populations have persisted at low levels in artificial wetlands associated with agricultural and flood control activities, many of these altered wetlands are now threatened with urban development. In addition, several cities within the current range of the giant garter snake are expanding. Rapidly expanding urban areas within or near the historic range of the giant garter snake include: (1) Chico, (2) Yuba City, (3) Sacramento, (4) Galt, (5) Stockton, (6) Gustine, and (7) Los Banos.

Effects of the Proposed Action

Construction activities necessary to implement the Yolo Basin Wetlands Project, Davis Site, Administrative Area, and 180-acre parcel have the potential to affect the giant garter snake. The snake is known to occur in the Willow Slough Bypass and irrigation drainages adjacent to the western and northern boundaries of the Davis site and the southern boundary of the Administrative Area provide potential habitat; it is likely that these sites could support this species. Construction has taken place during the period when snakes are most active and likely has resulted in the death of any snakes present within the project areas.

The hydrology of Willow Slough Bypass would be altered by diverting flows to the proposed wetlands. Willow Slough Bypass is primarily influenced by the seasonality of irrigation deliveries, which results in significant seasonal changes in flows and available habitat. The proposed diversion would increase fluctuations in flows and may decrease available habitat.

Permanent alteration in hydrology of the north canal by relocating a utility road crossing and fill placed on the western canal bankside will result in permanent alteration of 5.17 acres of giant garter snake habitat. Construction of the stormwater and wastewater conveyance structures and an outfall structure at the Administrative Area will result in the temporary loss of 1.28 acres of giant garter snake habitat.

Additional adverse affects to the snake which could result from project implementation include potential exposure of the species to contaminants from wastewater effluent and urban runoff, establishment of large predator fishes within the constructed permanent wetland areas, and harm or disturbance from increased human access and routine maintenance activities.

Mitigation measures are listed below to mitigate potential effects to the giant garter snake to less than significant.

Cumulative effects

Cumulative effects include the effects of future State, local or private actions that are reasonably certain to occur in the action area considered in this biological opinion. Future Federal actions that are unrelated to the proposed action are not considered in this section because they require separate consultation pursuant to section 7 of the Act.

Future projects that propose to fill or alter the wetland habitat of the giant garter snake will be subject to Corps permit under section 404 of the Clean Water Act. These actions constitute future Federal actions that are unrelated to the proposed action. As such, they are not considered cumulative effects because they require separate consultation pursuant to section 7 of Act. However, an undetermined number of future proposed federal projects that may alter the habitat of the giant garter snake will not be subject to these permitting processes and, as such, are cumulative to the proposed project.

Additional cumulative effects include: (1) burrow fumigants, (2) effects on upland habitat from disking, and (3) changes in water level due to agricultural practices.

Conclusion

After reviewing the current status of the giant garter snake, the environmental baseline for the action area, the effects of the proposed action, and the cumulative effects, it is the Service's biological opinion that the proposed project is not likely to jeopardize the continued existence of the giant garter snake. No critical habitat has been designated for these species, therefore, none will be affected.

INCIDENTAL TAKE STATEMENT

Section 9 of the Act and Federal regulation pursuant to section 4(d) of the Act prohibit the take of endangered and threatened species, respectively, without special exemption. Take is defined by the Service as harass, harm, pursue, hunt, shoot, wound, kill, trap, capture or collect, or to attempt to engage in any such conduct. Harass is defined by the Service as an intentional or negligent act or omission which creates the likelihood of injury to a listed species by annoying it to such an extent as to significantly disrupt normal behavioral patterns which include, but are not limited to, breeding, feeding or sheltering. Harm is defined by the Service to include significant habitat modification or degradation that results in death or injury to listed species by impairing behavioral patterns including breeding, feeding, or sheltering. Incidental take is defined by the Service as take that is incidental to, and not the purpose of, the carrying out of an otherwise lawful activity. Under the terms of section 7(b)(4) and section 7(o)(2), taking that is incidental to and not intended as part of the agency action is not considered to be prohibited taking under the Act, provided that such taking is in compliance with this Incidental Take Statement.

The measures described below are nondiscretionary and must be implemented by the Corps so that they become binding conditions of any grant or permit issued to the applicant, as appropriate, in order for the exemption in section 7(o)(2) to apply. The Corps has a continuing duty to regulate the activity covered by this incidental take statement. If the Corps (1) fails to require the applicant to adhere to the terms and conditions of the incidental take statement through enforceable terms that are added to the permit or grant document, and/or (2) fails to retain oversight to ensure compliance with these terms and conditions the protective coverage of section 7(o)(2) may lapse.

Amount or Extent of Incidental Take

The Service assumes that take will occur, because of construction activities. It is not possible to make an accurate estimate of the number of snakes that will be temporarily disturbed during construction activities associated with the project, because there is no accurate census or population status information available for the action area. In instances when take is difficult to detect, the Service estimates take in numbers of acres of habitat lost as a result of the action; therefore, the Service anticipates that 5.17 acres of giant garter snake habitat will be lost as a result of the action and an unquantifiable number of snakes may be harassed, harmed, or killed during construction in potential habitat.

Take also may occur during routine operation and maintenance activities conducted for management of the wetlands post-project. The Service anticipates incidental take of giant garter snakes will be difficult to detect, however, every effort must be made to document the amount of take during the ten-year period of this authorization. If the routine maintenance and operation procedures for Yolo Basin wetlands incorporates the Best

Management Practices for giant garter snake recommended by the Service and California Department of Fish and Game (Brode 1990), take should not exceed one snake per year.

Effect of the Take

In the accompanying biological opinion, the Service has determined that this level of anticipated take is not likely to result in jeopardy to the giant garter snake or destruction or adverse modification of critical habitat.

Reasonable and Prudent Measures

The Service believes the following reasonable and prudent measures are necessary and appropriate to minimize incidental take of giant garter snakes.

1. Impacts of loss and degradation on habitat of giant garter snakes shall be minimized and wherever feasible, habitat shall be restored to its pre-project condition.

2. Harassment, harm, or take of giant garter snakes during construction activities associated with implementing the project shall be minimized.

3. Harassment, harm, or take of giant garter snakes during post-project routine maintenance activities shall be minimized.

Terms and Conditions

In order to be exempt from the prohibitions of section 9 of the Act, the Corps must ensure compliance with the following terms and conditions, which implement the reasonable and prudent measures described above. The terms and conditions are non-discretionary.

1. The following terms and conditions implement reasonable and prudent measure number one:

   A. Preserved giant garter snake habitat on-site or within 30 feet of the project boundaries shall be designated as Environmentally Sensitive Areas (ESAS) and shall be flagged to include a 30-foot buffer zone adjacent to the habitat by a qualified biologist approved by the Service and avoided by all construction personnel.

   B. Install two channel markers in Willow Slough, one upstream of the proposed diversion structure and one downstream, and record depth bi-monthly for one year to establish baseline conditions prior to diverting flows. Continue monitoring on a monthly basis for five additional years to determine trends over time for periods of dessication which may adversely effect giant garter snake habitat outside of the project area.

   C. The Corps shall ensure compliance with the Reporting Requirements below.

2. The following terms and conditions implement reasonable and prudent measure number two:

   A. All new construction activities within giant garter snake habitat shall be conducted between May 1 and October 1. This is the active period for giant garter snakes and direct impacts are lessened, because snakes are actively moving and avoiding danger. No grading, excavating, or filling may take place in or within 30

feet of existing giant garter snake habitat between October 1 and May 1, unless authorized by the Service. More danger is posed to snakes during this inactive period, because they are occupying underground burrows or crevices and are more susceptible to direct effects, especially during excavation.

B. Any dewatered habitat must remain dry for at least 15 consecutive days after April 15 and prior to excavating or filling of the dewatered habitat.

C. Construction personnel shall participate in a Service-approved worker environmental awareness program. Under this program, workers shall be informed about the presence of giant garter snakes and habitat associated with the species, and that unlawful take of the animal or destruction of its habitat would be a violation of the Act. Prior to new construction activities, a qualified biologist approved by the Service shall instruct all construction personnel about: (1) the life history of the giant garter snake; (2) the sensitivity of Willow Slough Bypass and the adjacent irrigation canals and rice fields in regard to the giant garter snake; and (3) the terms and conditions of the biological opinion and other practical things that can be done to minimize and avoid adverse affects to the giant garter snake. Proof of this instruction shall be provided to the Sacramento Field office within 24-hours prior to commencement of construction activities.

D. Prior to construction activities, the site shall be inspected by a qualified biologist who has the necessary collection permits and is approved by the Sacramento Field office of the U.S. Fish and Wildlife Service. The biologist shall review and monitor construction activities that occur within giant garter snake habitat to ensure that no "taking" of giant garter snakes or damage to its habitat occurs outside of the construction zone. The monitoring biologist shall have the authority to stop construction activities until appropriate corrective measures have been completed or until written approval is obtained from the Service or both. The biologist also shall be required to report violations to the Service immediately by telephone at (916) 979-2725 and by written letter addressed to the Assistant Field Supervisor for Endangered Species within one working day. The project area shall be re-inspected whenever a sufficient lapse in construction activity has occurred, *i.e.*, to avoid the hybernation period or between project phases.

3. The following terms and conditions implement reasonable and prudent measure number three:

A. An Operations and Maintenance Manual shall be developed in cooperation with the Fish and Wildlife Service and California Department of Fish and Game which will incorporate Best Management Practices to minimize incidental take of the giant garter snake and which will be reviewed and approved by the Service.

B. Introduction of large predatory fishes in the constructed permanent wetland areas shall be prohibited.

C. Terrestrial refugia (winter months) for the giant garter snake shall be incorporated in the project design. This can be accomplished by placing piles of boulder or concrete rubble along

the toe of levee areas and in other upland areas and by relaxing rodent control on the levee bordering the site.

D. Prohibit complete drainage of all project wetlands from spring through fall as garter snakes are aquatic during this period and rely on small fish, frogs, and tadpoles for food.

E. Stock all permanent wetlands with mosquito fish to improve foraging.

F. Manage ponds to provide maximum nearshore emergent marsh zones of bulrush at densities that do not exclude snake and fish movement within this habitat. Also, strive to maintain aquatic vegetation in island configurations. This will maximize vegetative cover during the snakes active period without impeding foraging.

G. Incidental take for routine activites shall be authorized for a period of ten years. Records of any incident shall be maintained for the duration of the project and submitted to the Service. At the end of ten years, the amount of take shall be evaluated prior to extending this initial authorization. Unacceptable levels of take shall require modifications to the Best Management Practices adopted in the Operations and Maintenance Manual.

H. Surveys for giant garter snakes shall be conducted annually each May, July, and September, to determine if species are utilizing the created habitat. Any incidental sitings noted during the year should be recorded.

Reporting Requirements

A post-construction compliance report prepared by the Service approved monitoring biologist shall be forwarded to the Assistant Field Supervisor for Endangered Species at the Sacramento Field Office within 60 calendar days of the completion of each of the three sites. This report shall detail (i) dates that construction occurred; (ii) pertinent information concerning the applicant's success in meeting project mitigation measures; (iii) an explanation of failure to meet such measures, if any; (iv) known project effects on federally listed species, if any; (v) occurrences of incidental take of federally listed species, if any; and (vi) other pertinent information.

Review Requirements

The reasonable and prudent measures, with their implementing terms and conditions, are designed to minimize the effects of incidental take that might otherwise result from the loss of 5.17 acres of giant garter snake habitat. In addition, an unknown number of giant garter snakes will be temporarily disturbed as a result of construction activities. With implementation of the recommended Best Management Practices, the Service believes that no more than one giant garter snake per year will be killed during the course of routine maintenance and operation of the project. If, during the course of the action, this minimized level of incidental take is exceeded, such incidental take represents new information requiring review of the reasonable and prudent measures provided. The Corps must immediately provide an explanation of the causes of the taking and review with the Service the need for possible modification of the reasonable and prudent measures.

The Sacramento Field Office is to be notified within three working days of the finding of any dead listed species or any unanticipated harm to the species addressed in this biological opinion. The Service contact person for this is the Assistant Field Supervisor at (916) 979-2725.

CONSERVATION RECOMMENDATIONS

Section 7 (a) (1) of the Act directs Federal agencies to utilize their authorities to further the purposes of the Act by carrying out conservation programs for the benefit of endangered and threatened species. Conservation recommendations are discretionary agency activities to minimize or avoid adverse effects of a proposed action on listed species or critical habitat, to help implement recovery plans, or to develop information. The recommendations provided here relate only to the proposed action and do not necessarily represent complete fulfillment of the agency's 7(a)(1) responsibilities for these species.

1. As a Recovery Plan for the giant garter snake is developed, the Corps should assist the Service in its implementation.

2. The Corps should assess all activities permitted under its authority and determine avoidance and minimization measures.

In order for the Service to be kept informed of actions minimizing or avoiding adverse effects or benefitting listed species or their habitats, the Service requests notification of the implementation of any conservation recommendations.

REINITIATION - CLOSING STATEMENT

This concludes formal consultation on the actions outlined in the request. As provided in 5o CFR §402.16, reinitiation of formal consultation is required where discretionary Federal agency involvement or control over the action has been retained (or is authorized by law) and if: (1) the amount or extent of incidental take is exceeded; (2) new information reveals effects of the agency action that may affect listed species or critical habitat in a manner or to an extent not considered in this opinion; (3) the agency action is subsequently modified in a manner that causes an effect to listed species or critical habitat that was not considered in this opinion; or (4) a new species is listed or critical habitat is designated that may be affected by the action. In instances where the amount or extent of incidental take is exceeded, any operations causing such take must cease pending reinitiation. In addition, if the Corps discovers that the conditions of the permit have not been followed, the Corps should review its responsibilities under section 7 of the Act and reinitiate formal consultation with the Service. We appreciate the cooperation of the Corps throughout this consultation process.

If you have any questions regarding this biological opinion, please contact June DeWeese of my staff at (916) 979-2725.

Sincerely,

Joel A. Medlin
Field Supervisor

Exhibit F-4
Sheet 11 of 12

cc: ARD-ES
FWS-SFO, Corps Branch

Literature Cited

Brode , J. M. 1988. Natural history of the giant garter snake *(Thamnophis couchi gigas)*. In Proceedings of the conference on California herpetology, H. F. Delisle, P.R. Brown, B. Kaufman, and B. M. McGurty (eds.). Southwestern Herpetologists Society, Special Publication No. 4:25-28.

Brode, J. M. 1990. Guidelines for Procedures and Timing of Activities Related to the Modification or Relocation of Giant Garter Snake Habitat. California Department of Fish and Game.

Fitch, H. S. 1940. A biogeographical study of the ordinoides artenkreis of garter snakes (genus *Thamnophis)* . University of California Publications in Zoology 44(1):1-50.

Fitch, H. S. 1941. Geographic variation in garter snakes of the genus *Thamnophis sirtalis* in the Pacific coast region of North America. American Midland Naturalist, 26:570-592.

Hansen, R. W. 1980. Western aquatic garter snakes in central California: an ecological and evolutionary perspective. Master of Arts thesis, California State University, Fresno, California, 78 pp.

Hansen, R. W. 1988. Review of the status of the giant garter *snake (Thamnophis couchi gigas)* and its supporting habitat during 1986-87. Final report to California Department of Fish and Game, Contract C-2060. 31 pp.

Hansen, R. W. and G. E. Hansen. 1990. Thanmophis gigas (giant garter snake) reproduction. Herpetological Review, 21(4): 93-94.

Hansen, G. E. and J. M. Brode. 1980. Status of the giant garter snake *Thamnophis couchi gigas* (Fitch). California Department of Fish and Game, Inland Fisheries Endangered Species Program Special Publication 80-5, 14 pp.

Natural Diversity Data Base. 1995. Computer search. California Department of Fish and Game, Sacramento CA.

Rossman, D. A. and G. R. Stewart. 1987. Taxonomic reevaluation of *Thamnophis couchi*. Occasional Papers of the Museum of Zoology, Louisiana State University, No. 63, 23 pp.

United States Fish and Wildlife Service. 1994. Endangered and threatened wildlife and plants; determination of threatened status for the giant garter snake. Federal Register 58(201): 54053 - 54064.

Exhibit G
Suggested Annual Report Format

To: District Engineer
Sacramento District
U.S. Army Corps of Engineers
1325 J Street
Sacramento, California 95814-2922

1 Sep___ to 31 Aug_____

Dear Sir:

The annual report for the period of (1 September _____ to 31 August _____) for the Yolo Basin Wetlands (Vic Fazio Yolo Wildlife Area), Sacramento River, California project is as follows:

A) The condition of the revegetation planting is summarized as follows:

(Refuge Manager's summary of conditions may be inserted here)

It is our intention to perform (within 12 months) the following maintenance operations in order to repair or correct the conditions indicated above:

(Refuge Manager's summary of maintenance operations for the following 12 months)

B) During the report period major high water periods (flood water in Yolo Bypass reaches toe of project berms) on the following dates:

Sacramento River Yolo Bypass below Sacramento Weir		
Gage Location	Date	Maximum Water Elevation

Comments on the behavior of berms during high water periods are as follows:

(Refuge Manager's log of observations)

During the high water periods when the water level reached the height of _____, on the _____ gage or excess thereof (dates) _____, it was necessary to organize and carry out flood operations as follows:

(see Maintenance Manual)

C) The inspections have indicated (no) or the following encroachments or trespasses upon the project right-of-way:

D) The status of maintenance measures, indicated in the previous annual report as being required or as suggested by the representatives of the District Engineer, is as follows:

(Statement of maintenance operations, item by item with percent completion)

E) The fiscal statement of the Refuge Manager's operations of the current report period is as follows:

	Labor	Material	Equipment	Overhead	Total
Inspection					
Maintenance					
Flood Fighting Operations					
TOTAL					

Respectively submitted,

_____

Refuge Manager

Exhibit H
Slide Gates and Alfalfa Valves

C-10
CANAL GATE

This gate is designed for use on canal and pipeline systems which operate at low "heads" and where a moderately priced gate is desired. Typical installations include: farm turnouts, control of industrial wastes, drainage and for tide control.

Construction is of grey iron with an all-bolted steel frame with "" minimum thickness. The standard stem is of a special leaded steel which resists corrosion. The stem is operated at the structural frame top by a heavy cast-bronze lift nut and a cast iron wheel.

Adjustable cast iron wedge blocks, held securely in place by two machine bolts, assure a dependable seating closure with a practical degree of water tightness. The cast iron seats are machined or ground. A solid rim "easy-grip" handwheel is standard.

Optional materials include: bronze seats; stainless steel structural frame and bolts; stainless steel or brass stems; and special epoxy, coal tar or galvanized coatings.

When desired, design variations in stem diameter, pitch and thread rotation are available to match existing equipment. Extended stems, special lifts, oil seals, stem guides and limit nuts are a few of the optional items available for use with these gates.

Various sizes, weights and options are available. See specification pages for detail. Special variations quoted upon application.

Recommended Maximum Seating Heads

6" - 24"	23 Feet
30" - 36"	11 Feet
42" - 48"	9 Feet
54" - 72"	6 Feet

Recommended Maximum Unseating Head - 0

Frame Types for Various Installation Requirements

F-	Flatback for headwall mounting.
SB-	Spigotback for annular or recor spiral corrugated pipe.
CIP-	For solvent cement mounting onto plastic pipe.
C-	With galvanized steel tapered setting collar for concrete or asbestos cement pipe.
SA-	Spigot for annular corrugated pipe. (special order)
TYPE 4-	For mounting on plastic pipe utilizing special two part epoxy.

(See following pages for more detailed information.)

C-10

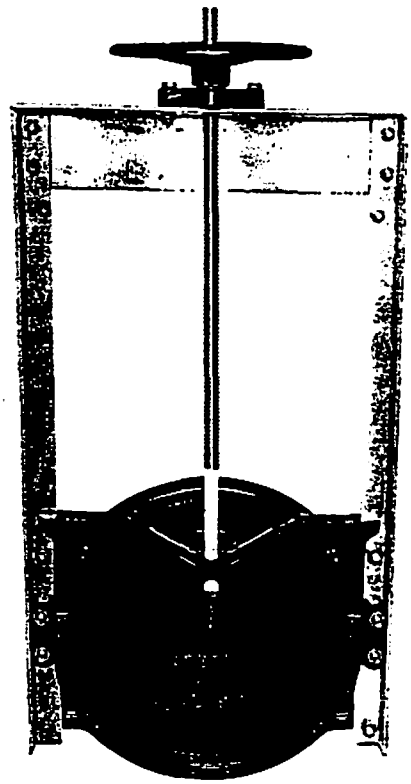

Note: Bronze Lift Nut furnished as standard on all Waterman Canal Gates

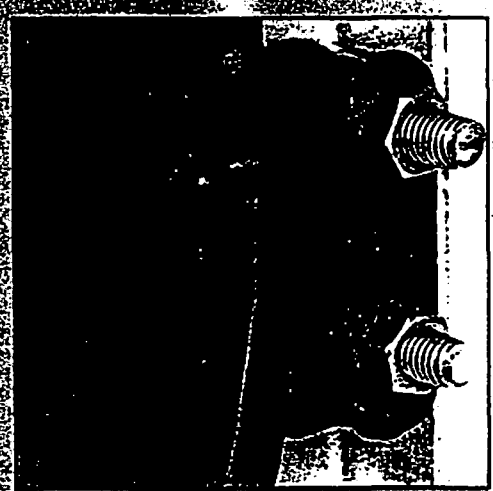

Waterman Model C-10 wedging system offers two point adjustment and larger wedging surfaces for a more positive contact.

C-10 CANAL GATE PARTS

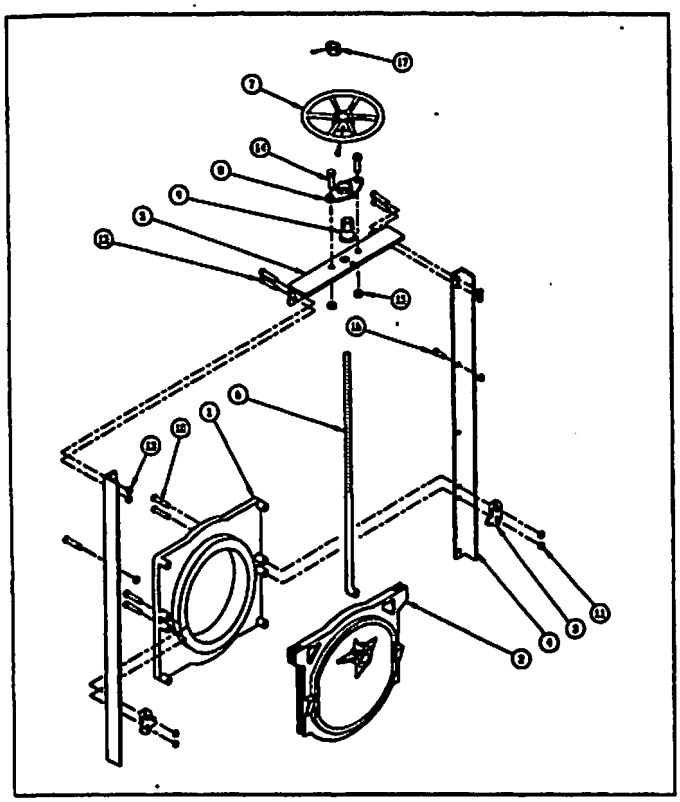

PARTS LIST		
No.	Name	Qty.
1	Frame	1
2	Cover	1
3	Wedge (R&L)	2
4	Guide Rail (R&L)	2
5	Headrail	1
6	Stem	1
7	Handwheel	1
8	Thrust Collar	1
9	Lift Nut	1
10	Wedge Bolt	4
11	Wedge Nut	4
12	Frame Bolt	4
13	Frame Nut	4
14	Collar Bolt	2
15	Collar Nut	2
16	Stop Bolt & Nut	1
17	Limit Nut (optional) *	1

* With set screw

CL-10 CANAL GATE

Waterman CL-10 Canal Gates are identical to our model C-10 Gates with the exception of the cast iron cover (slide) which is of a flat plate type construction with ribs reinforcing its face, to withstand the maximum heads as noted for our C-10 gates. This gate cover also features a square bottom design, which allows a more open "clog-free" flow at points of initial opening. The seat being only slightly raised above the cover plate surface helps prevent trash from collecting behind the cover which can cause difficulty in operation.

Available with threaded thrust nut for true NRS application. All parts are interchangeable with our Standard C-10 gate. Available in a variety of sizes.

CL-10

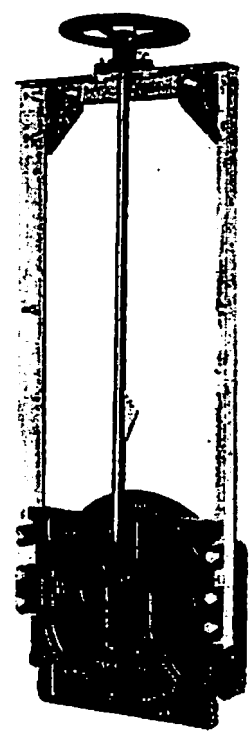

Flat Plate Type, Square Bottom

Waterman INDUSTRIES, INC.

TYPICAL SPECIFICATIONS
FOR WATERMAN MODEL C-10 CANAL GATE

ıeral

ı ne gates shall be self-contained with yoke mounted bench stand operators with rising stem, or self-contained with either non-rising stem extension (NRE) or rising stem extension (RSE), or with separate stem guides and operators, in accordance with the requirements of these specifications. Specific gate design and configuration shall be as noted in gate schedule or shown on plans.

Frame and Cover (Slide)

The frame and cover (slide) shall be cast iron with machined seating faces. Seating surfaces of both frame and cover shall be assembled so that maximum clearance between seating faces shall be .004 when in fully closed and wedged position. The frame shall be flatback or spigotback, or other special mounting configuration as specified herein or shown on plans.

Grooves shall be cast on the vertical sides of the cover to match guide angles. The cover shall be of domed design to withstand maximum seating head as specified following:

Gate Size	Max. Seating Head (Ft.)
6" - 24"	23
30" - 36"	11
42" - 48"	9
54" - 72"	6

The guide rails and head rails shall be minimum ¼ inch thick structural steel, designed and built to withstand the total thrust of the gate slide due to water pressure and wedge action.

There shall be one adjustable cast iron wedge per side, located on the horizontal centerline of the gate. The cover wedge shall be integrally cast with the cover, while the other half of the wedging system shall be attached to the guide rail with two bolts. The wedges shall have smooth bearing surfaces and shall be adjustable to insure effective contact between gate seating surfaces.

Stem

ıe stem shall be cold finished steel of suitable length and ample strength for the intended service. The stem diameter shall ɜ capable of withstanding twice the rated output of the operator at 40 pound pull, and shall be supported such that the L/r ratio for the unsupported part of the stem shall not exceed 200.

When rising stem extension is used, the stem extension shall be supported such that a rigid installation shall be provided. Stem guides shall be spaced that the L/r ratio of the stem does not exceed 200.

Operators

Manual operated lifting mechanisms shall be as indicated on the plan drawings or in the gate schedule. Handwheel type lifts shall have threaded bronze lift nut to match stem. Threads shall be machine cut, acme type, and right hand unless otherwise specified.

An arrow shall be cast on the handwheel to indicate the direction of rotation to open the gate. A maximum effort of 40 pounds shall be required to operate the gate after it is unseated, based on the maximum specified head.
The canal gates shall be Waterman Model C-10 or approved equal.

Materials

Frame, Cover (Slide), Handwheel - Cast Iron - ASTM A=126; Class B
Rails and Yoke - Structural Steel - ASTM 1-36
Stem - Leaded Cold Rolled Steel - ASTM A-108, Type 12L14
Lift Nut - Bronze - ASTM B-584, Alloy 844 or 865
Assembly Hardware and Fasteners - Galvanized per ASTM A-153
Paint - Manufacturer's Standard

Optional Items Include:

Galvanized Steel or 304 or 316 Stainless Steel Rails and Yoke
Type 304 or 316 Stainless Steel or Brass Stems
Stainless Steel Assembly Hardware
Structural Steel Pipe (w/cast iron brackets) NRE and RSE
Stem Extensions
ɔtal Galvanizing per ASTM A-123 (Frame, Cover, Rails, Lift, Etc.)
ɔpecial Paint Finish: Coal Tar Epoxy, Polyamide Epoxy, Etc.

Exhibit H
Sheet 3 of 9

RED TOP

CANAL GATE FRAME TYPES

FOR C-10,CL-10, FC-10 AND CM-10 GATES

The Waterman C-10 gate and its variations can be furnished to suit many installation requirements. These include: "F" flatback for headwall mounting with anchor bolts; "SB" spigotback for attaching to annular or spiral corrugated metal pipe; "SA" spigotback for annular corrugated metal pipe; "C" galvanized steel tapered setting collar for installation on concrete pipe; "R-Seal" spigot, a rubber seal joint for attaching to corrugated metal pipe, "CIP" for quick, easy, rugged mounting onto plastic pipe using standard PVC solvent cement, and "Type 4" for mounting gate to plastic pipe utilizing two part epoxy.

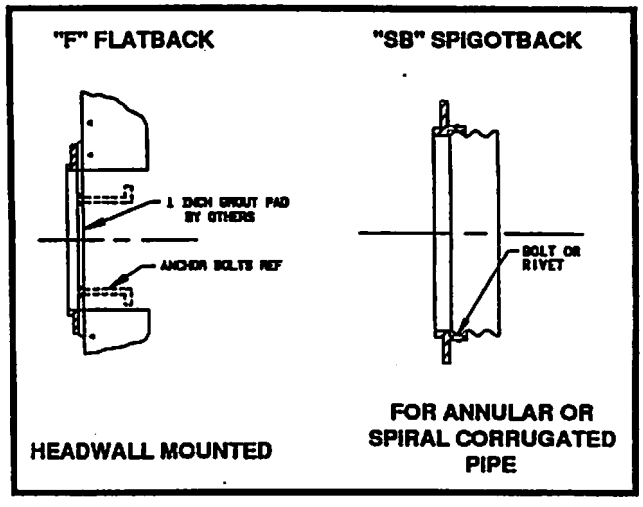

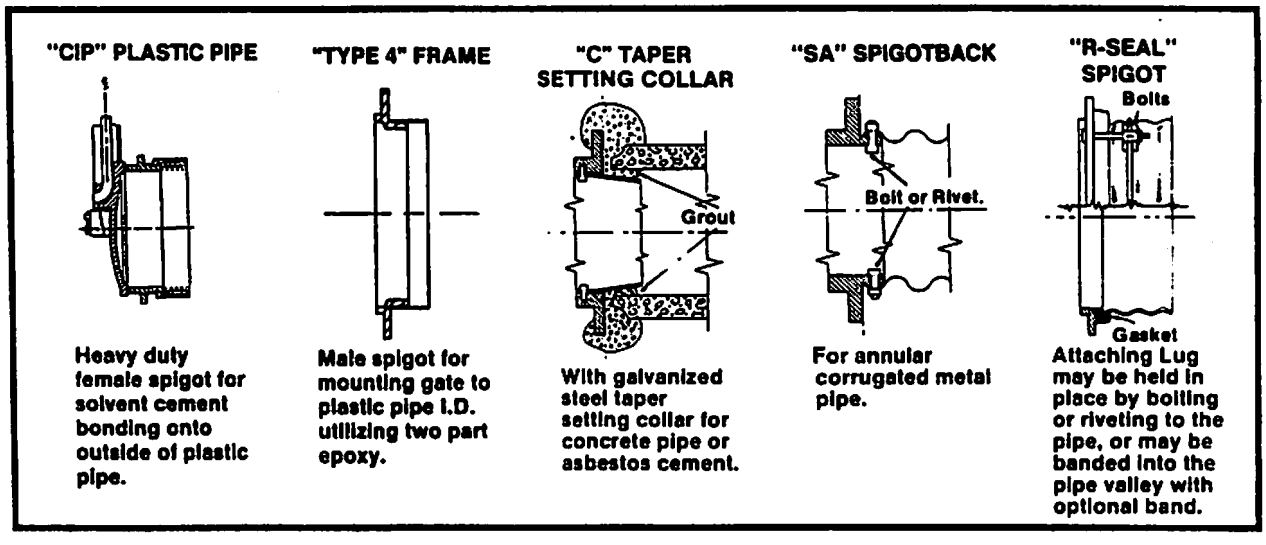

RED TOP C-10 CIP

WITH CIP FRAME

The Waterman C-10 Canal Gate with CIP frame is designed for direct solvent cement bonding onto PVC plastic pipe. The need for costly, high labor epoxy cement is eliminated.

The CIP is a rugged, long-lasting, patented frame that is quick and easy to install. It is recommended that additional headrail or frame support be provided to reduce stress on the plastic pipe, particularly on extended frames. This can be accomplished with the use of anchor bolts.

The CIP frame, along with the other frame types on this page, is an example of Waterman's leadership is design and response to water control needs.

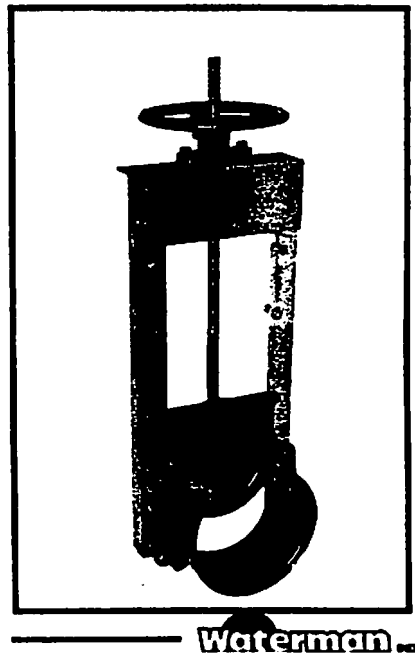

ALFALFA VALVES

The Waterman RED TOP Alfalfa Valve and the Waterman SUNSHINE Alfalfa Valve are designed particularly for use with the Waterman Universal Hydrant, when portable surface pipe is to be used, or when an extra heavy duty valve is desired. A fully machined outer rim or seat ring is provided to fit and make a watertight seal with our hydrant.

The impact of a large volume of water against the valve cover and screw is sometimes severe. To withstand this, the bronze screw is made especially heavy and is secured to the rugged cast iron cover with a brass nut and washer instead of with a small cotter pin as is commonly used on many similar valves. Continuous ring cover packing, designed with a hollow center for added resilience, is used to make an easy-sealing valve. A solid bronze nut is cast into the arch, eliminating the troublesome looseness and periodic replacement of an inserted nut. A brass washer and O-ring combine to make a dependable stem seal.

- Select either the RED TOP concave cover or the SUNSHINE convex (dome) type cover.
- Select either high strength NATIONAL STANDARD THREAD (vee) or rugged MODIFIED ACME THREAD (square) on these valves. Both threads require three turns per inch of opening.
- Select either a frame with a SOLID ARCH, cast in place, or our popular REMOVABLE ARCH, which is easily removed for placement of suction hoses, repairs, etc. A quick eccentric latch locks the arch in place without troublesome cotter keys, pins or bolts.

Select a frame type from page 11.
Type 1 - Web Frame
Type 2 - Quick Setting
Type 3 - For Steel Pipe
Type 4 - For Plastic Pipe
Type CIP - "Easy Mount" for Plastic Pipe

For use with the Waterman Universal Hydrant

RED TOP

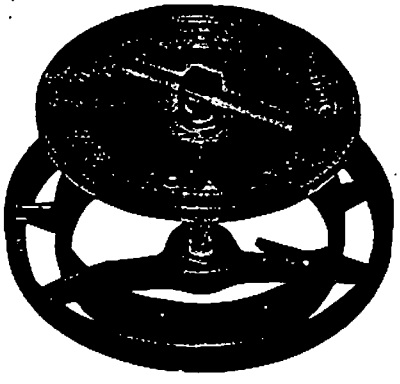

Red Top Alfalfa Valve with Type 1 Frame and Removable Arch

SUNSHINE

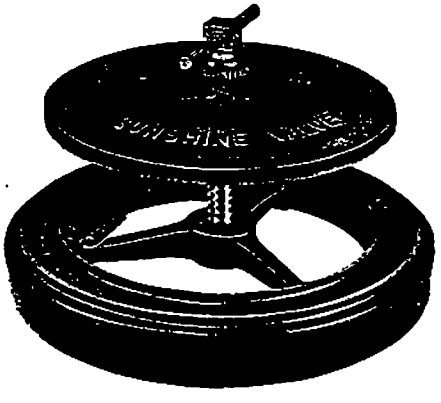

Sunshine Alfalfa Valve with Type 2 (Quick Setting) Frame and Removable Arch

AIR RELIEF AND DRAIN VALVE

for installing underneath overflow and alfalfa covers

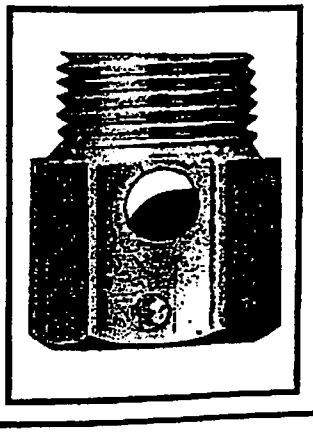

ALFALFA VALVE FRAME TYPES

FOR PIPE MADE OF CONCRETE,STEEL AND PLASTIC

Most frame types are available with either RED TOP or SUNSHINE covers. Many are available with either a cast-in SOLID ARCH or our popular eccentric lock REMOVABABLE ARCH. Threads may be specified as NATIONAL STANDARD (vee) or MODIFIED ACME (square).

Please specify all details when ordering.

INSTALLATION SUGGESTIONS

TYPE 1 - WEB

Place grout on concrete riser, set valve. Add additional grout and trowel with laying glove to fill voids between web. After grout has dried, check and regrout any voids.

Caution: Seat rings must be free of grout for at least 3/8" below surface. Valve should not be banded on outside when hook type hydrant will be used.
Note: This valve setting may be strengthened for use with higher heads or severe surges by tying reinforcing wire into web before grouting.

TYPE 2 - QUICK SETTING

Invert frame and fill cavity with heavy grout and/or place grout on top of riser pipe. Quickly turn frame over onto risers, rotating slightly to assure firm contact. Trowel inside edge. Clean seat and threads.

Note: The grouting cavity is large enough to accommodate most reinforced pipe as well as standard irrigation sizes.

TYPE 3 - FOR O.D. SIZE STEEL PIPE

Place on pipe and weld or braze. Preheating and slow cooling are recommended for fracture free attachment. An epoxy cement can also be used for attaching. Pipe should be clean (blast or wire brush) and care taken to leave no voids between pipe and frame. Frame may also be attached by drilling and bolting through, using a suitable mastic for the seal between pipe and frame.

TYPE 4 - FOR I.D. LOWHEAD PLASTIC PIPE

Method #1 - Press valve into inside of riser pipe and secure with two draw bands.

Method #2 - Using No. 1950 I.P.S. 2 part epoxy or equal, apply cement to outside surface of valve skirt and inside surface of riser. Press valve firmly into riser, rotating 1/4 turn as you set valve.

TYPE CIP - *"EASY MOUNT* "FOR PLASTIC PIPE (CIP-PIP FOR PLASTIC IRRIGATION PIPE SIZE PIPE-CIP-IPS FOR IRON PIPE SIZE PLASTIC PIPE)

Prime inside of plastic valve skirt and outside of pipe riser. Apply PVC cement to same surfaces and immediately press valve firmly onto riser, rotating a 1/4 turn as you set valve.

(1) A uniform outside skirt length makes possible the use of our Universal Hook Type Hydrant on these valves without hook adjustments when moving the hydrant from valves of one frame style to another.

INSTALLATION SUGGESTIONS

TYPE 1 - WEB

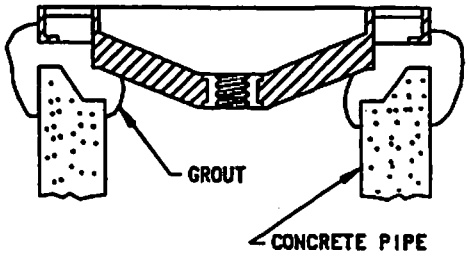

TYPE 2 - QUICK SETTING

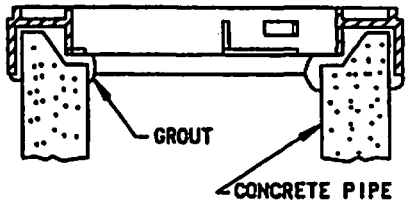

TYPE 3 (ARCH NOT SHOWN)

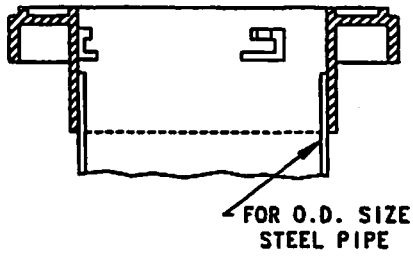

TYPE 4 (ARCH NOT SHOWN)

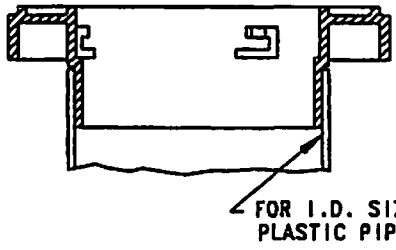

TYPE CIP* - *"EASY MOUNT"*

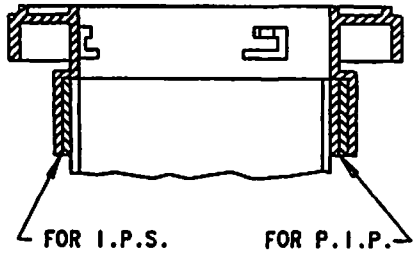

Maximum Operating Heads:
6" - 12", 25 feet; 14", 20 feet; 18" - 20", 15 feet; 24", 10 feet; 30" - 36", 10 feet

Maximum Static Heads:
6" 12", 50 feet; 14", 35 feet; 18" - 20", 30 feet; 24", 20 feet; 30" - 36", 15 feet.

* Patent 4600222

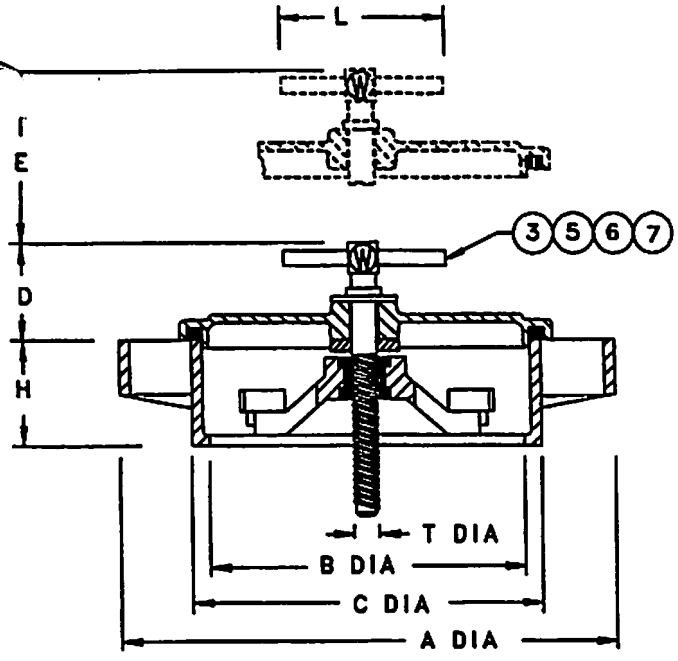

SUNSHINE ALFALFA VALVE
TYPE 1 FRAME

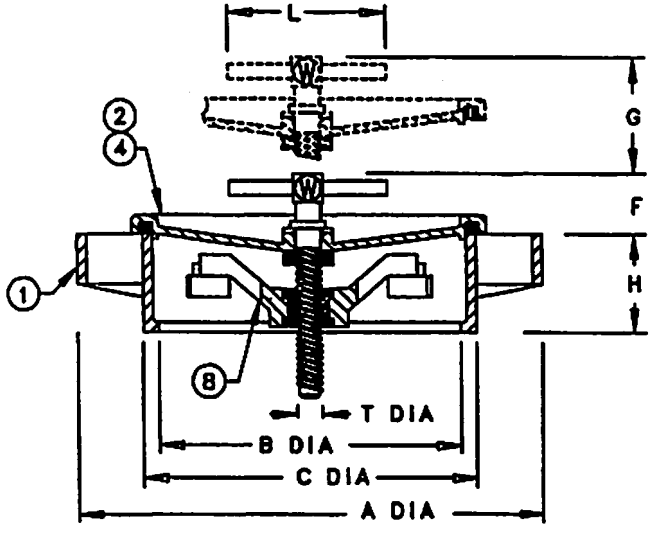

RED TOP ALFALFA VALVE
TYPE 1 FRAME

NOTES

1. SEE FACING PAGE FOR TYPE 2, 3, 4, & 5 FRAME DIMENSIONS.

2 AVAILABLE WITH RED TOP COVER ONLY.

3 (FACING PAGE) VALVE AVAILABLE WITH SOLID ARCH ONLY.

4 (FACING PAGE) SUITABLE FOR USE WITH 50 FT., & 100 FT. PIP PLASTIC PIPE.

5. 8" THRU 24" DIA. VALVES ARE 3 T.P.I., 30" & 36" ARE 4 T.P.I.

PARTS LIST

No.	Name	Qty
1	FRAME	1
2	COVER	1
3	SCREW	1
4	PACKING	1
5	NUT	1
6	WASHER	1
7	O-RING	1
8	ARCH	1

VALVE DIMENSIONS IN INCHES (NOMINAL)

VALVE SIZE	A	B	C	D	E	F	G	H	L	T	TURNS TO FULLY OPEN SUNSHINE	TURNS TO FULLY OPEN RED TOP	MAX. RECOMMENDED HEAD (FT.) STATIC	MAX. RECOMMENDED HEAD (FT.) OPERATING
8	12	7 13/16	8 5/8	1 3/4	2 1/4	7/8	2 1/2	2	6	7/8	7	8	50	25
10	13 3/4	9 1/4	10 5/16	2 1/4	3 5/8	1 3/8	3 3/8	1 15/16	7	1	11	10	50	25
12	16 1/16	11 1/4	12 5/16	2 7/8	3	1 5/16	3 1/8	2 5/16	7	1 1/8	9	9	40	20
14	18 13/16	13 5/16	14 3/8	3 7/16	5 1/8	1 5/16	4 3/4	2 13/16	8	1 1/4	15	14	30	20
16	21 1/16	15 3/4	16 7/8	3 1/2	3 3/8	1 7/16	3 5/8	2 3/8	8	1 1/4	10	11	25	20
18	23 1/4	17 7/8	18 7/8	3 3/4	5 3/16	1 1/2	5 1/4	2 3/4	8	1 1/4	16	16	20	20
20	25 3/8	19 3/8	20 13/16	3 11/16	5 5/8	1 3/8	5 5/8	2 3/4	8	1 1/4	17	19	20	20
24 2	29 3/8	23 3/4	24 3/4			7/8	8 1/2	2 1/2	8	1 1/4		26	20	15
30 2	38	29	30			1	6	4	10	1 1/2		18	20	10
36 2	44	35	36			1 1/8	4	4	10	2		12	20	10

ALL DIMENSIONS SUBJECT TO CHANGE

MODEL		
RED TOP & SUNSHINE ALFALFA VALVE		
SCALE	CATALOG DWG. NO.	REVISION NO
NONE	AG 12	1

Exhibit H
Sheet 7 of 9

Waterman INDUSTRIES, INC.

NOTE: FOR PRELIMINARY DESIGN PURPOSES ONLY
DO NOT USE FOR INSTALLATION

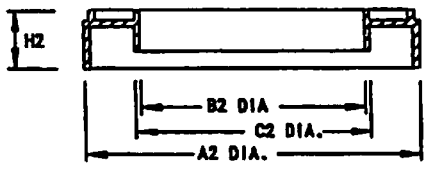

TYPE 2 FRAME

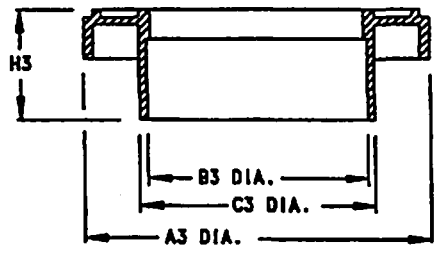

TYPE 3 FRAME

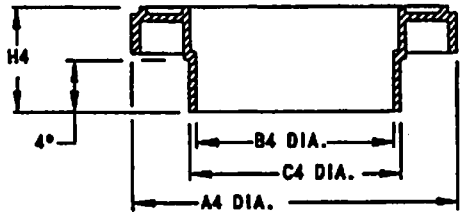

TYPE 4 FRAME

* 6 inch = 3 1/4"
* 8 inch = 3 1/2"

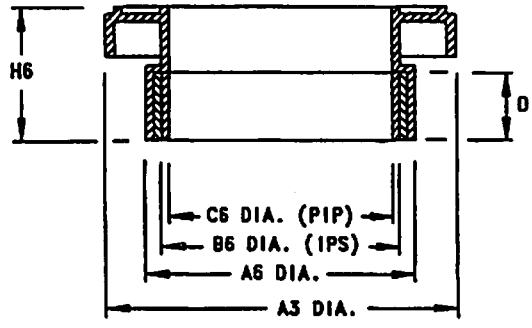

C.I.P. FRAME

VALVE DIMENSIONS IN INCHES

	TYPE 2 FRAME QUICK SETTING				TYPE 3 FRAME O.D. STEEL PIPE				TYPE 4 FRAME 4 [2] I.D. PLASTIC PIPE				C.I.P. FRAME IPS & PIP PLASTIC PIPE				
VALVE SIZE	A2	B2	C2	H2	A3	B3	C3	H3	A4	B4	C4	H4	A6	B6	C6	H6	D
6 [1]					10	6 3/16	6 5/8	3 1/2	10	5 1/2	5 15/16	4 1/2	7.38	6.62	6.16	5 5/8	2.50
8	12 1/4	8	8 5/8	2 3/16	12 5/16	8 3/16	8 11/16	3 1/16	12 3/8	7 3/8	7 15/16	5 3/8	9.63	8.84	8.18	6 1/4	3.00
8 X 10									14 1/16	7 3/8	7 15/16	5 5/16					
8 X 12 [3]									16 1/2	7 3/8	7 15/16	5 3/8					
10	13 7/8	10	10 3/8	2 1/2	13 7/8	10 3/16	10 3/4	3 3/16	14 1/8	9 3/8	9 7/8	5 3/4	11.50	10.77	10.22	6 3/16	3.00
10 X 12									16 3/8	9 3/8	9 7/8	5 7/16					
12	16 3/8	12	12 1/2	2 3/8	16 1/2	12 1/16	12 3/4	2 5/8	16 1/2	11 3/8	11 7/8	5 15/16	13.52	12.78	12.27	6 3/16	3.00
14	19	14	14 1/2	2 1/2													
15 X 14									19 3/16	14 1/4	14 3/4	15 13/16					
16	22 1/2	16	16 7/8	2 7/8													
18									23 1/4	17	17 3/4	6 3/8					
20									25 3/8	19 1/8	19 13/16	7 1/16					

ALL DIMENSIONS SUBJECT TO CHANGE

MODEL		
RED TOP & SUNSHINE ALFALFA VALVE		
SCALE	CATALOG DWG. NO.	REVISION NO.
NONE	AG 13	1

Exhibit H
Sheet 8 of 9

OVERFLOW VALVE & ALFALFA VALVE PARTS & PERFORMANCE CHART

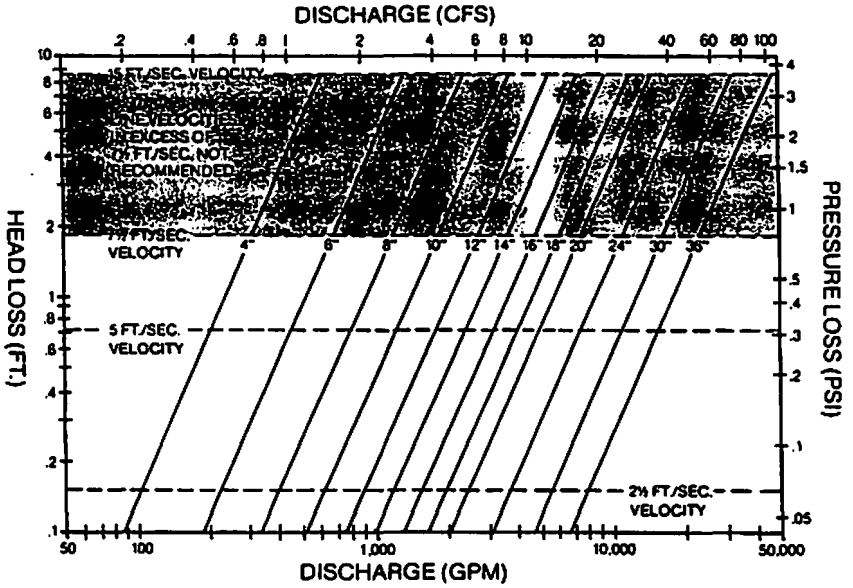

RED TOP ALFALFA VALVE PARTS

SIZE	COVER	SCREW	REMOVABLE ARCH TYPE-1 (CONCRETE)	REMOVABLE ARCH TYPE-3 (O.D. STEEL)	REMOVABLE ARCH TYPE-4 (PIP)	REMOVABLE ARCH CIP (IPS-PIP)	ARCH	SOLID ARCH TYPE-1 (CONCRETE)	SOLID ARCH TYPE-4 (PIP)	SOLID ARCH CIP (IPS-PIP)
6"	W151 6A	7/8" 6A	W153 6A	W153-3 6A	W939 6A	RA-CIP	W152 6A	W154 6SA		
10"	W155 10A	1" 10A	W158 10A	W990-3 10A	W891 10A	RA-CIP	W158 10A	W157 10SA		
12"	W159 12A	1 1/8" 12A	W160 12A	W1105-3 12A	W941 12A	W1691 RA-CIP	W162 12A	W161 12SA		
14"	W163 14A	1 1/4" 14A	W164 14A	W393-3 14			W166 14A	W165 14SA		
16"	W126 16A	1 1/4" 16A	W167 16A				W168 16A			
18"	W130 18A	1 1/4" 20A	W169 18A		W1659 18A		W170 18A			
20"	W132 20A	1 1/4" 20A	W171 20A		W1660 20A		W172 20A			
24"	W279 24A	1 1/4" 20SS	W280 24A				W276 24A			
30"	W663 30A	1 1/2" 30A	W662 30A				W664 30A			
36"	W1072 36A	2" 36A	W1073 36A				W107 36A			

SUNSHINE ALFALFA VALVE PARTS

SIZE	COVER	SCREW	REMOVABLE ARCH TYPE-1 (CONCRETE)	REMOVABLE ARCH TYPE-4 (PIP)	REMOVABLE ARCH CIP (IPS-PIP)	ARCH	SOLID ARCH TYPE-2 (CONCRETE	SOLID ARCH TYPE-4 (PIP)	SOLID ARCH CIP (IPS-PIP)
6"	W646 6SSA	7/8" 6A			RA-CIP		W647 6SA	W986 6SA	SA-CIP
6"	W146-1 6SSA	7/8" 6A	W153 6A	W989 6A	RA-CIP	W1355 6SSA	W154 6SA	W1166 6SA	SA-CIP
10"	W141 10SSA	1" 10A	W158 10A	W891 10A	RA-CIP	W1585 10SSA	W113 10SA	W1129 10SA	SA-CIP
12"	W143 12SSA	1 1/8" 12A	W160 12A	W941 12A		W1625 12SSA	W652 12SA	W1121 12SA	SA-CIP
14"	W148 14SSA	1 1/8" 14SS	W164 14A			W277 14SAA	14SA		
16"	W146 16SSA	1 1/4" 20A	W167 16A			W168 16A	16SA		
18"	W147 18SSA	1 1/4" 20SS				W170 18A			
20"	W1366 20SSA	1 1/4" 20SS				W172 20A			
8" X 10"	W141 10SSA	1" 10A		W1071 8"X10"A		W152 8"X10"SSA		W1166 8"X10"SA	
10" X 12"	W143 12SSA	1 1/8" 12A		W1055 10"X12"A		W1245 10"X12"SSA		W1147 10"X12"SA	
15" X 14"	W148 14SSA	1 1/4" 16A		W1194 15"X14"A	W166 14A				

Exhibit H
Sheet 9 of 9

Waterman INDUSTRIES, INC.

Exhibit I
Pumps

Exhibit I
Pumps
North (180 Acre-Unit) Pump Station
(10 HP Elevated Lift Pump)

Installation and Maintenance SERIES 1160 Low Lift Direct Coupled Propeller Turbine Pumps

AURORA PUMP

Exhibit I
Sheet 1 of 85

CURVE STATUS

12P 1170 R.P.M.

Vertl-Line

PUMP PERFORMANCE

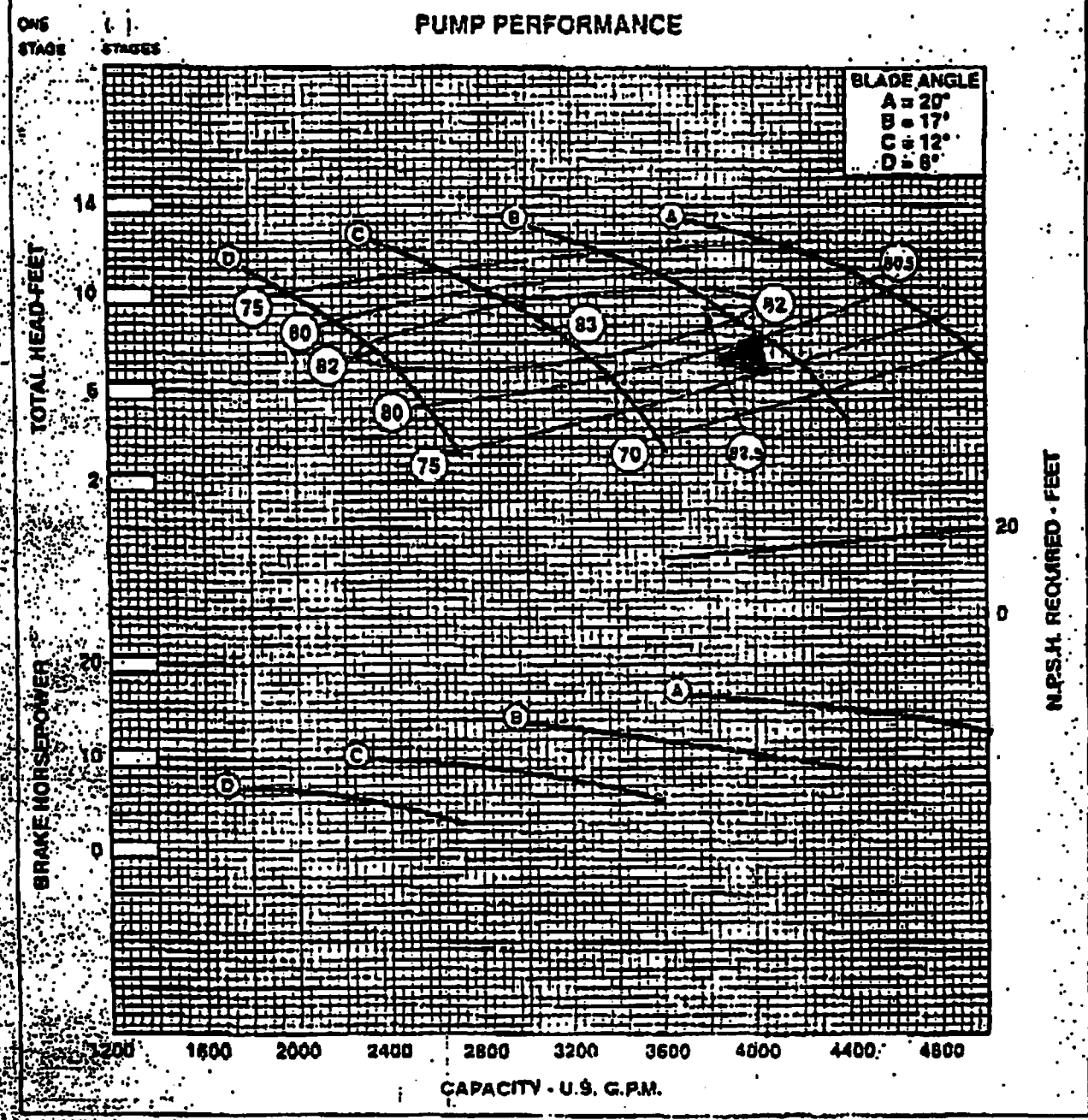

IMPELLER DIAMETER	SHUT-OFF HEAD	HORSEPOWER	"K" FACTOR	MAX SPHERES	1.0
A	36.7	44.4	48.4	IMP PATT. NO.	12P
B	33.7	39.8	48.4	CASE PATT. NO.	12P2
C	31.6	33.3	48.4	DISCHARGE BOWL	-
D	29.2	31.0	48.4	INTER. BOWL	-

Curves below typical performance, refer to factory for confirmation.

RECOMMENDATIONS FOR STORAGE
AURORA VERTI-LINE PUMPS

Aurora Verti-Line Pumps are carefully prepared for shipment from the factory. Skids and boxes are intended to resist mechanical damage from normal handling and preservatives are used to protect critical surfaces from routine conditions of weather and corrosion in transit. Effective life of factory-applied protection, however, can vary widely under different circumstances and should be considered adequate only to secure the equipment during shipment and installation. If installation and operation cannot be effected within a reasonably short time after delivery to jobsite, the product is assumed to be in storage and subject to precautionary procedures as described below.

With common sense as the best guide, store the equipment off the ground in an indoor location where it will not be exposed to excess moisture or humidity, extreme weather conditions, blowing dust corrosive fumes, or other harmful factors. If storage must be outdoors, provide at least a roof shelter and cover all pieces securely with six mil polyethylene sheet or equivalent.

Inspect pump periodically to assure that factory-applied preventives remain intact. With the first sign of deterioration, renew the protective measure in question. If rust spots appear on machined surfaces, clean with fine emery cloth and apply approved rust preventive.

If pump is assembled, it should remain on skids just as delivered. Packing rings and/or mechanical seals if assembled in place should be removed from the pump and stored in a box. If pump is unassembled, inner column joints should be nested inside eduction column pipe to save space as well as to provide greater protection. All threads must be covered with wrapping and tape or with suitable caps. Never stack anything on top of column joints.

Electric motors and right angle gear drives must be handled vertically at all times. See individual manufacturer's storage instructions for motors, gears, IC engines, universal shafts, other appurtenances and accessories.

For long term storage, but not to exceed 36 months, the following additional precautions should be observed:

- Air dry hydraulic portion of pump to remove any residual liquid.
- Cover and seal with pressure sensitive waterproof tape all openings into flowstream areas.
- Wrap shaft extension with pressure sensitive waterproof tape.
- Coat rabbet fit on driver and pump head with heavy grease, along with any other exposed machined surfaces.
- Completely cover upper part of motor and seal with tape. Consider providing space heaters for motors if stored under damp or humid conditions.
- Fill any external lubrication piping or flush lines with rust preventive.
- Store all parts in a clean dry area with ambient temperature reasonably constant between 40 and 100 degrees F.

Upon removing a pump from any type of storage, proceed as follows:

- Consider contracting with the pump manufacturer for the services of a factory trained field service engineer or technician.
- Remove all covers and tape from openings, drivers, and threads.
- Remove grease and rust preventive from mating fits and running surfaces.
- Clean all threads and mating fits thoroughly.
- Assemble packing and/or mechanical seal if applicable, using appropriate instructions.
- Flush any external lubrication piping to remove rust preventive.
- Follow individual manufacturer's instructions regarding driver and other appurtenances.
- Inspect all visible parts.
- Install pump and start up in accordance with applicable instruction manual.

Occasionally, a pump is stored in its installed position for protracted periods while related equipment is made ready or perhaps simply in seasonal shutdown. In this event, pump and driver shaft must be rotated manually once a week or the unit may be power run every two weeks, using proper startup procedures at each start.

These procedures are offered as a guide to assist users and may not be construed to amend, to extend, or to modify in any way the AURORA Pump warranty.

Table of Contents

Section		Page
1	A Word to the Owner	1
2	The Sump	3
3	The Mounting Base	4
4	The Equipment	5
5	Receiving the Pump	7
6	Unloading the Pump	8
7	Installing the Pump - Factory Assembled Unit	10
8	Installing the Pump - Unassembled Unit	12
9	Lubricating the Pump	19
	a. Gravity Flow Oil	19
	b. Pumped Liquid	20
	c. External Source Pressure Lubrication	20
	d. Fresh Water Flush	21
10	Installing the Driver	24
	a. Vertical Hollow Shaft	24
	b. Vertical Solid Shaft	26
11	Optional Equipment	29
	a. Flanged Non-Adjustable Shaft Coupling	29
	b. Below Base Discharge	29
	c. Suction Umbrella	30
12	Connecting the Piping	31
13	Starting the Pump	32
14	Precautionary Information	34
	a. Responsibilities	34
	b. General Cautionary Notes	34
	c. Operation at Shutoff Head	35
	d. Maintenance Hints	35
	e. AURORA Warranty	38

Exhibit I
Sheet 4 of 85

SECTION 1

A WORD TO THE OWNER

Efficient performance. Satisfactory operation. Dependable service.

We know these are the things you want from your Aurora Verti-Line vertical propeller pump and we've designed it accordingly. We've prepared this booklet to help you assure continuance of these features by implementing a careful and proper installation and maintenance program. If you want further assistance, you might consider contracting for the services of an experienced Aurora service representative to supervise your installation and/or startup.

Because of variations in jobsite environments and installation requirements, we've had to be somewhat general. However, we have listed what we believe are the most important guidelines. Your installer must still use sound judgement to adapt the methods we've outlined to the specific site circumstances and pump design features in each particular installation. It is in your interest that he does, since failure to comply with recommended procedures may void your warranty.

If any question should arise during the course of the work, we urge you to see your local Aurora representative immediately. Please be able to identify the unit by its serial number. We stamp the number on the nameplate that can be found on the discharge head.

Figures 1 and 2 will show you the relationship of all the parts after installation is complete. The nomenclature we've used here will identify the items throughout the instructions. Before starting the installation procedure, please read through the entire process we've described in this book, omitting material not applicable to your particular pump. Study in detail the precautionary directions emphasized in Section 14.

Then, when you do start the work, refer to the instructions for each individual step. After the equipment is in operation, we suggest you keep a manual available at the site for future use in maintenance programs. It can be used in conjunction with the Aurora disassembly, assembly and troubleshooting manual.

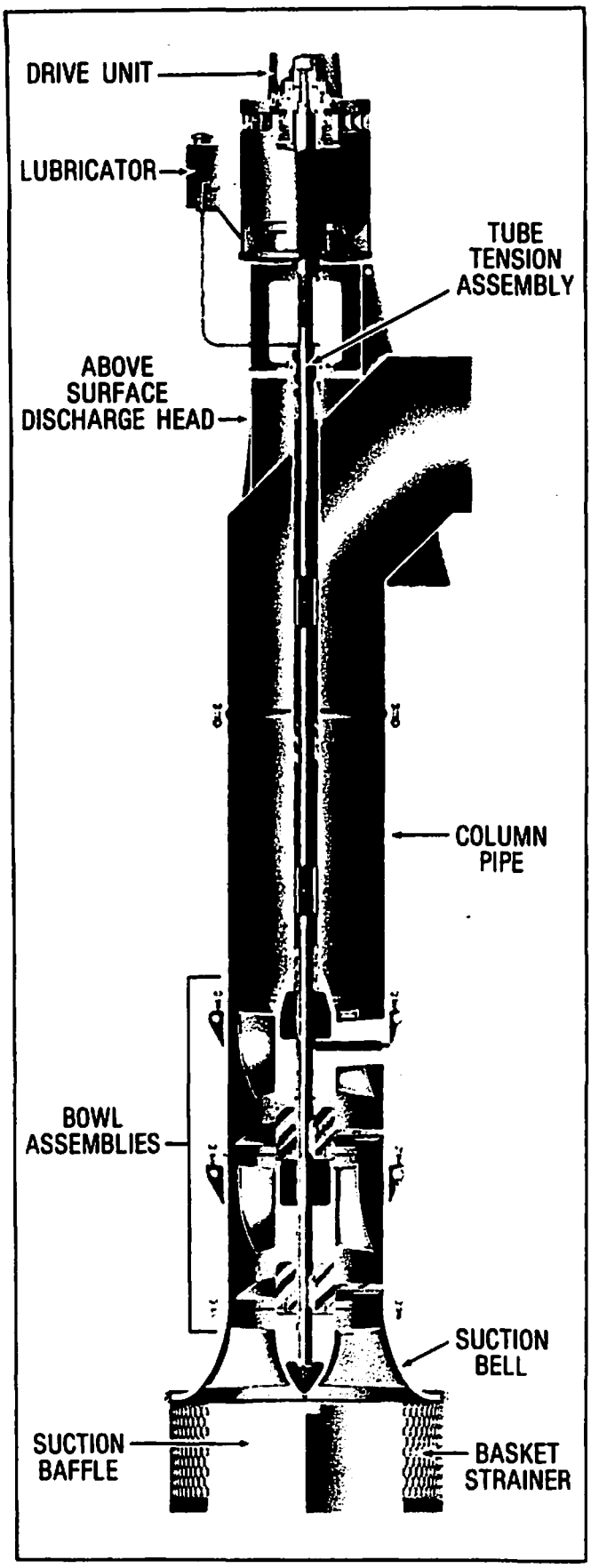

Figure 1. Propeller Low Lift Pump with Above Surface Discharge

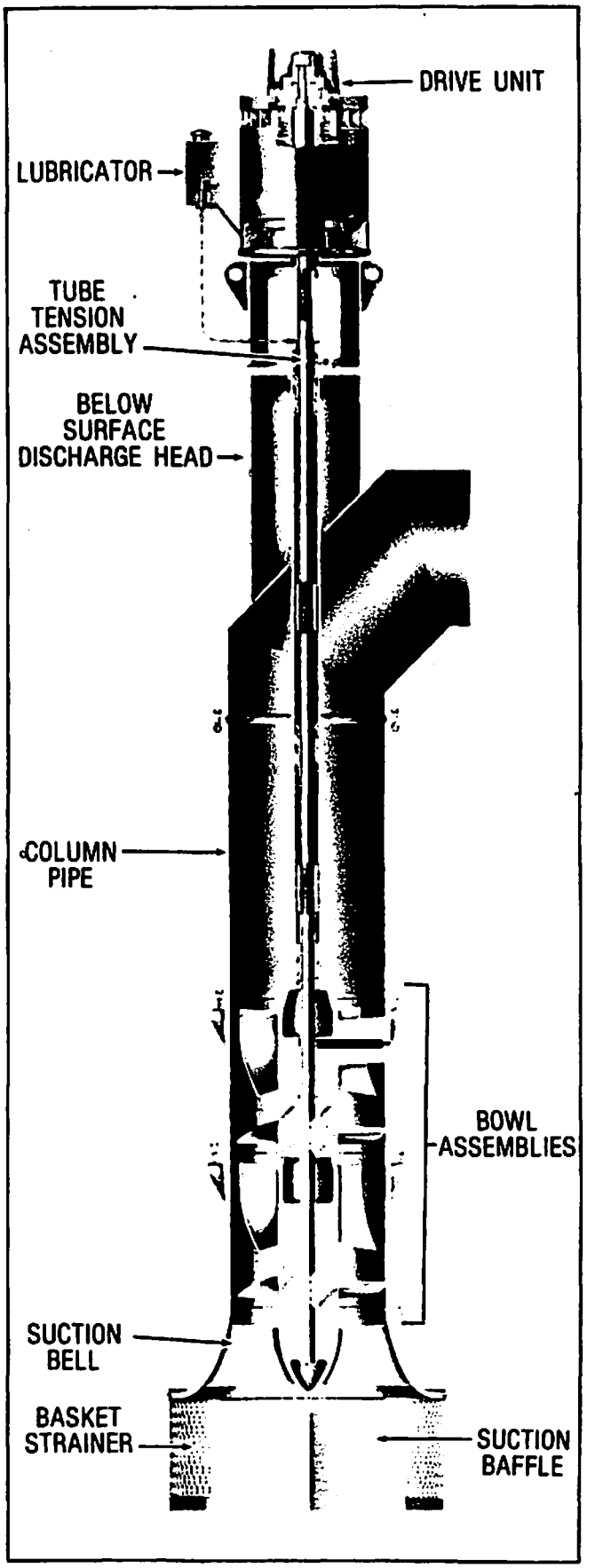

Figure 2. Propeller Low Lift Pump with Below Surface Discharge

Exhibit I.
Sheet 6 of 85

SECTION 2

THE SUMP

The sump you provide can influence both the mechanical and hydraulic performance of your pump. The intake configuration should be designed to deliver an evenly distributed flow of water to the pump suction since uneven flow patterns tend to create vortices. Vortexing can be submerged and completely invisible, or, it can appear on the surface. It can introduce air into the pump, can increase or decrease power consumption, can influence submergence requirement, and can produce objectionable noise and vibration, among other things.

It's easy to be misled by low calculated average velocities across an intake channel, but keep in mind these figures can often mean absolutely nothing. It's the localized velocities that start the vortex. Actually, vortices are more easily sustained in flows of lower average velocities where a calm slowly moving surface does nothing to interfere with a gradual buildup in vortex size. A more turbulent surface can tend to break up these disturbances before they grow large enough to cause harm.

The Standards of the Hydraulic Institute offers certain guidelines for good pit design and we subscribe to these general principles. However, we recommend you put your sump design questions in the hands of an experienced sump design engineer who can match intake configuration with pump requirements in the plant design phase and make it possible for you to realize optimum performance from each.

Before starting installation, inspect the completed sump carefully. You'll want to make sure it's dimensionally adequate to receive the pump. You'll also want to see that it has been cleared of all trash and debris. Your inspection should include any pipelines or conduits feeding into the pit. It's a good idea to have the basin screened to prevent future entrance of foreign material which can damage or clog the pump, possibly even rendering it inoperative.

SECTION 3

THE MOUNTING BASE

Your Aurora Verti-Line propeller pump requires a foundation suitable for the weight of the entire pump when full of water. While the preferred material is solid reinforced concrete, you can use adequate fabricated steel framework as long as you keep deflections to an absolute minimum. Regardless of material, the supporting base must be properly engineered, structurally sound and stable, able to withstand and prevent objectionable vibration.

Most propeller pump designs feature relatively large suction bell diameters. The opening in the foundation through which you'll install the unit must allow working clearance. If you've elected to use a below base discharge configuration, the opening must also accommodate passage of the discharge elbow. We advise you to verify these clearances before starting installation.

You'll undoubtedly want to provide anchor bolts to secure the discharge head to the mounting base. We prefer the sleeve bolt design shown in Figure 3 and you probably will too since it's easy to use. Alternate bolts are illustrated, however, for your consideration.

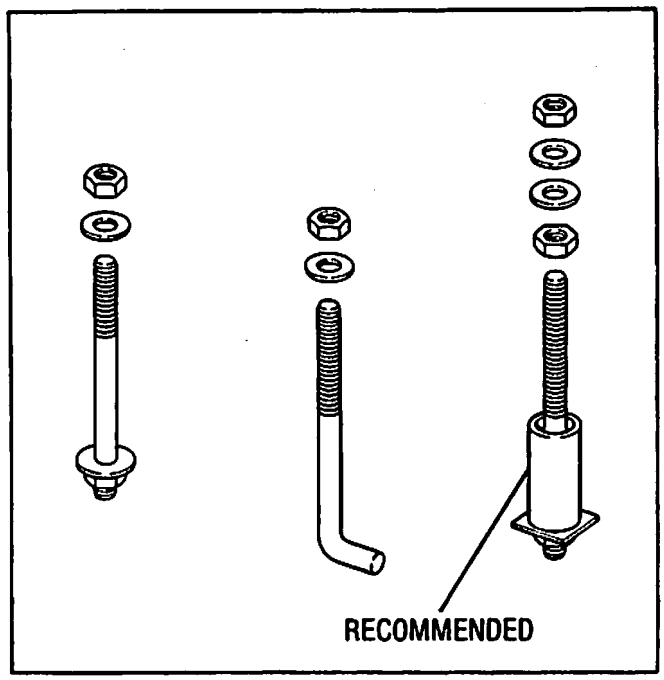

Figure 3. Foundation Anchor Bolts

SECTION 4

THE EQUIPMENT

The material and equipment you'll need for installation may vary with the size of pump and the type of job. We'll offer the following suggestions as a guide but you will want to remember the primary tool to be used at all times is SAFETY FIRST.

You can use a portable derrick or tripod, but we recommend a boom crane of adequate capacity or a properly designed pump setting rig similar to that shown in Figure 4. Whatever you choose, your lifting device must allow the load hook to be raised at least two feet higher than the total length of your assembled pump. Your hook should be of the safety type with a good easy working swivel and you must have sufficient reach to center it over the installation position.

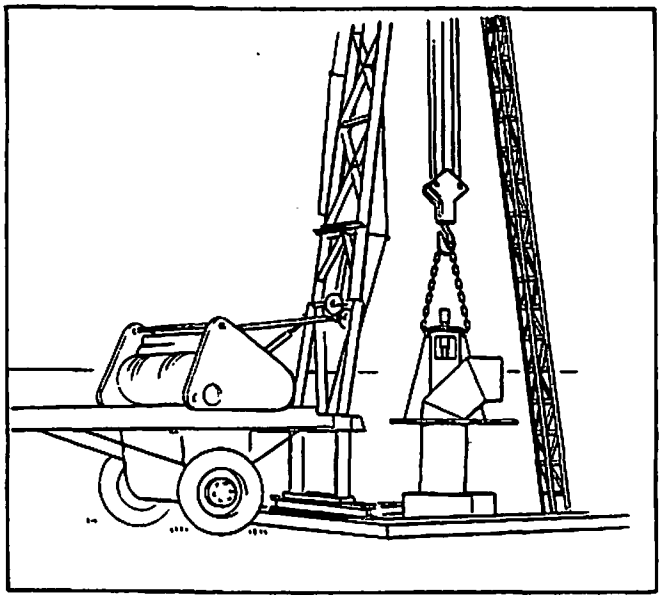

Figure 4. Pump Installation Rig

In most cases, your Aurora Verti-Line propeller pump will be delivered to you in an assembled condition, ready to lower in place and to accept the driver plus some miscellaneous parts. We've described this situation in Section 7. If you've elected to receive it unassembled due to its size, jobsite headroom limitation, or some other compelling reason, we've provided information in Section 8 for you.

For the usual installation, we suggest the following miscellaneous tools and material but you may want to vary them to suit the peculiarities of your individual project:

Lifting equipment (See Figure 4)

*Steel beam clamps (See Figure 5)

Chain or cable sling about 10 feet long of adequate size for job (See Figure 6)

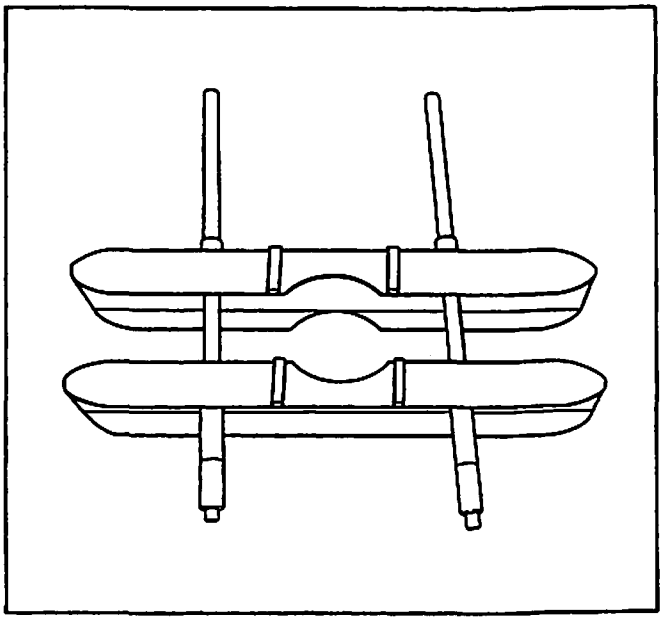

Figure 5. Beam Clamps

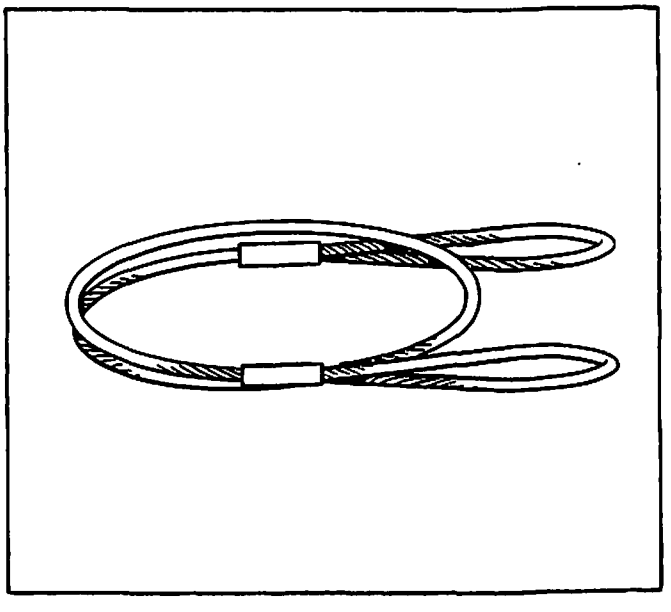

Figure 6. Cable Sling

Chain tongs

*Tube tension wrench (See Figure 7)

Medium size pipe wrenches

12 foot length 3/4 inch rope

Ordinary set of mechanics tools (See Figure 8)

Large crescent wrench

Wire brush

Assortment of files

*Cover for bowl unit and column sections

Clean rags

Thread compound -- Use anti-galling type for stainless steel parts

Solvent -- in recommended containers

Special lubricants as required

Shims and wedges

Non-shrink grouting material

Note

All combustible materials must be kept in approved safety containers and handled carefully, away from any flame, sparks, exhaust, or any other possible source of ignition.

*Required only for installation of unassembled pumps

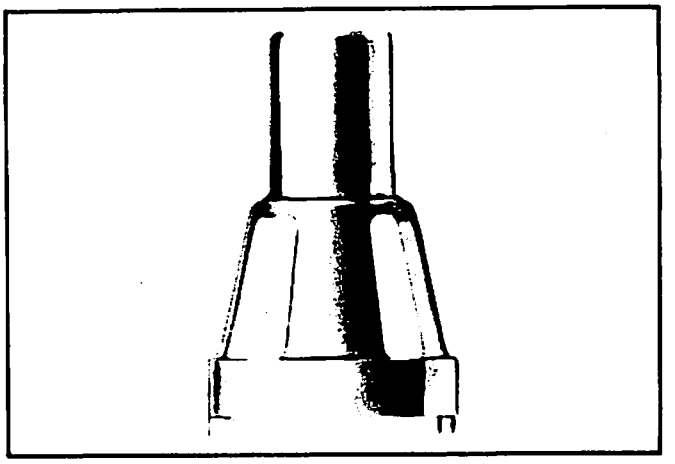

Figure 7. Tube Tension Wrench

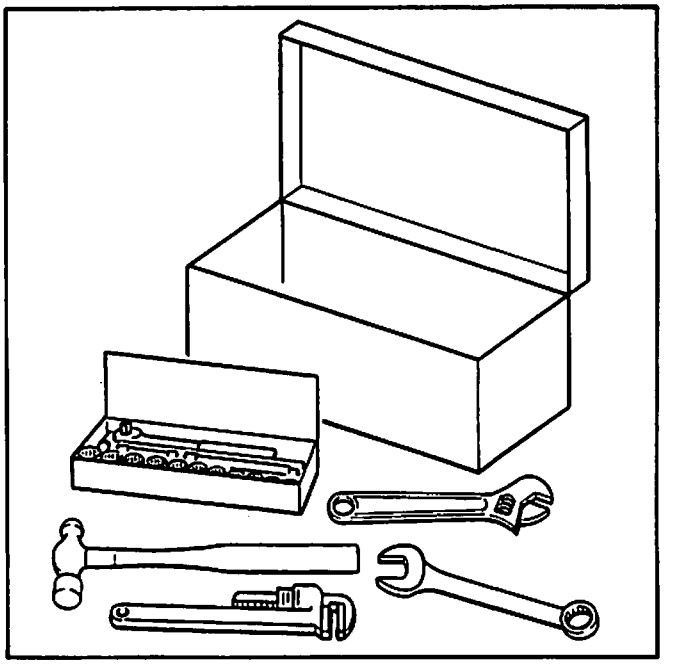

Figure 8. Ordinary Set of Mechanics Tools

SECTION 5

RECEIVING THE PUMP

Your Aurora Verti-Line propeller pump was inspected on the carrier just prior to leaving the factory. When you receive it at your jobsite, look it over carefully for any visible damage to parts, skids, boxes, or dunnage. If shaft is crated, open the crate carefully to inspect and make a count but leave the shaft in the box for protection until ready for installation. Take inventory on the truck or during the unloading process. We don't want you to sign for damaged or incomplete shipments unless you take the appropriate exceptions. Report such instances immediately to the Aurora sales office and to the transportation company involved giving full particulars and confirming all verbal understandings in writing.

SECTION 6

UNLOADING THE PUMP

We cannot urge you too strongly to exercise extreme care in handling and installing all parts. All items are precision machined for proper alignment and, if dropped, banged, sprung, or mistreated in any way, misalignment and malfunction will undoubtedly result. Parts which are too heavy to be lifted from the transporting car or truck, as shown in Figure 9, should be skidded slowly and carefully to the ground so as to prevent harm. We ask you never to unload by dropping parts directly from the carrier to the ground. Never use crates in which parts were shipped for skids.

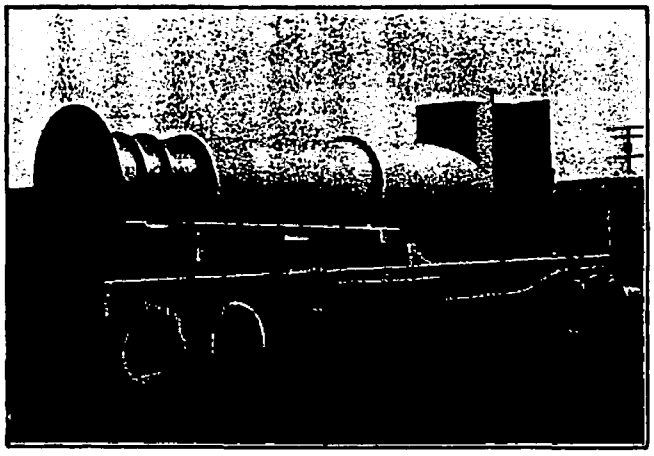

Figure 9. Transported via Truck Carrier

If you can't begin installation within a very few days after delivery, it's a good idea to segregate and identify all components comprising your Aurora shipment so you won't lose them in the midst of other equipment arriving at the jobsite. Under these conditions, refer to the Recommendations for Storage located on the inside front cover of this publication. Read and follow the instructions carefully because care of the pump during storage can be as important as maintenance after operation has begun.

If your jobsite conditions permit, you may be able to install directly from the truck that brought the pump to you. If not, and if you've received your pump unassembled, lay out the column pipe and bowl assembly on suitable timbers or staging to keep all material out of the dirt. Figure 10 illustrates an acceptable method of laying out a pump. Inner column joints consisting of shafting and tubing with couplings and lineshaft bearings will have been preassembled for you at the Aurora factory into proper lengths to match the column pipe. Insert these assemblies into the mating pipe sections with the projecting lineshaft coupling and bearing if any pointing toward the installation position. See Figure 11 for enclosed lineshaft and Figure 12 for open lineshaft.

Figure 10. Properly Layed Out Pump

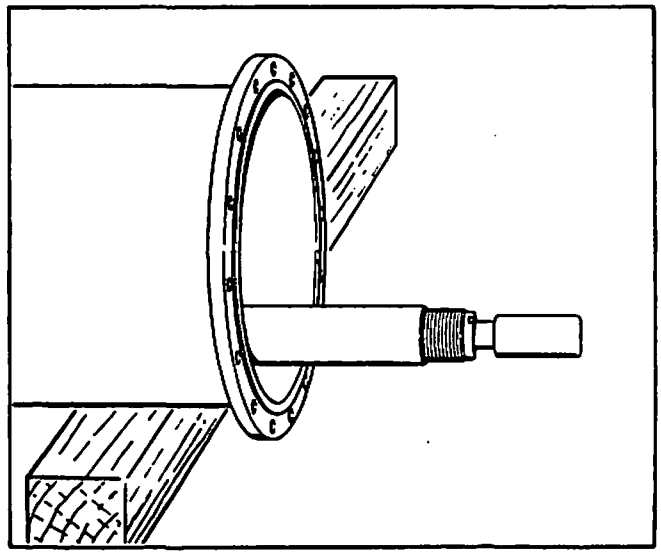

Figure 11. Enclosed Lineshaft

Examine the tube faces to see that they are free from burrs or nicks and, in the process, wipe them clean. Your installer should check for tightness those sections that were assembled at the factory to insure none have loosened in transit. He should also inspect each joint for straightness as a bent tube cannot be used. Keep ends covered until each piece is ready for installation.

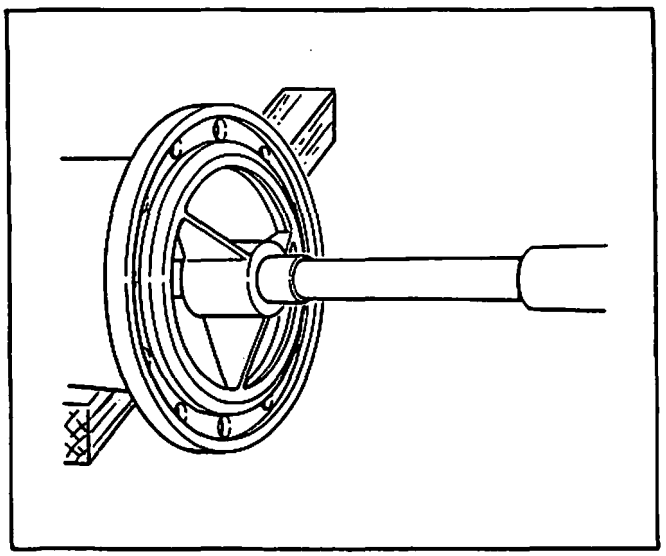

Figure 12. Open Lineshaft

If your lineshaft was shipped to you in a crate, we suggest you handle it directly from the crate. If not, place each length on timbers and clean with solvent to remove rust preventive, oil, or slushing compound. In either case, inspect each joint to make sure the faces are undamaged and that the piece is absolutely straight. Each was straightened before shipment from the factory and, if any were bent in transit, they cannot be used. Insert each piece into the proper pipe section and keep ends covered until installation.

All other parts should be cleaned and laid out on a suitable surface in the order in which you'll want to use them. Again, check against your packing list to be sure none are missing. It's much better to find out now than during the actual installation.

If you received your pump in the assembled condition, go right on to Section 7. If unassembled, skip Section 7 and follow directions in Section 8.

SECTION 7

INSTALLING THE PUMP

FACTORY ASSEMBLED UNIT

You're now ready to start actual installation. Clear the work area at and around the mounting position so installers can move freely and with maximum safety. This will also decrease the chances for foreign material or objects to enter the pump as it is lowered into position and secured.

During the course of the work, you must never lose sight of the fact that you are handling precision components no matter how awkward they may be to manipulate. All threads should be engaged by hand and checked before tightening. Damage resulting from cross threading or dirt must be repaired with a file before applying force. If not repairable, the part must be replaced so it's clearly worth your while to use the utmost care.

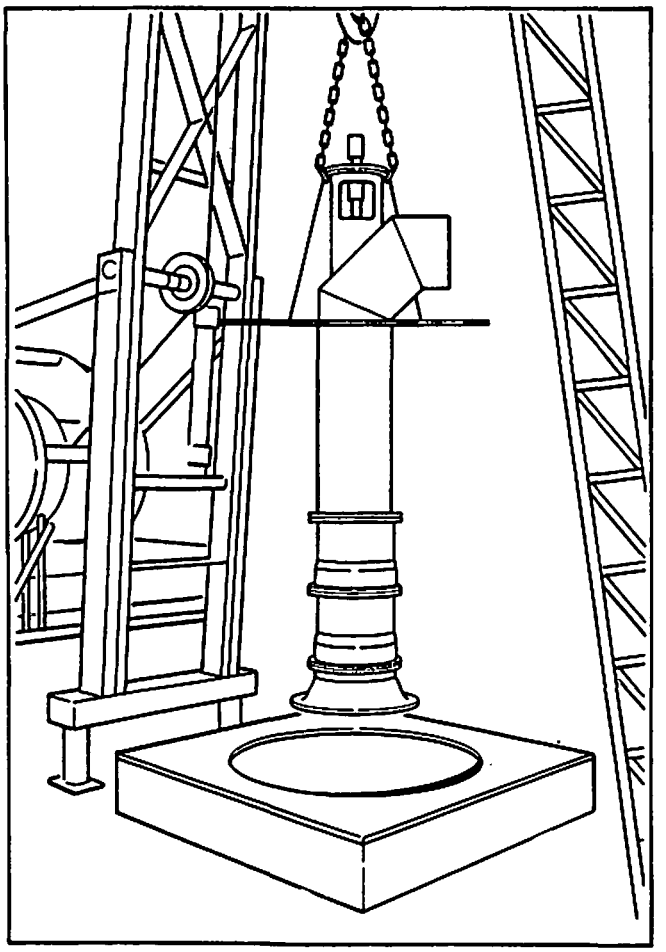

Figure 13. Raising Unit Over Mounting Position

Using the lifting lugs on the discharge head only, raise the unit as shipped to a vertical position over its mounting base, Figure 13. Take care to avoid putting any strain on the column or any exposed shafting. Also be careful not to damage the strainer, if used, during the lifting operation. Clean the bottom of the pump base and, if the base is to be grouted, apply a heavy coat of grease. Lower the assembly gently into place in its operating position with full contact, base to mounting surface. Assemble anchor bolt nuts very loosely.

If your pump has been constructed with a shaft enclosing tube, you will find the tubing terminates in a tension nut assembly in the discharge head. See Figure 14. Since this part is assembled at the factory where the proper tension has already been applied to the tube, there is nothing for you to do here except to connect the lubricating system. We'll tell you all about that in Section 9.

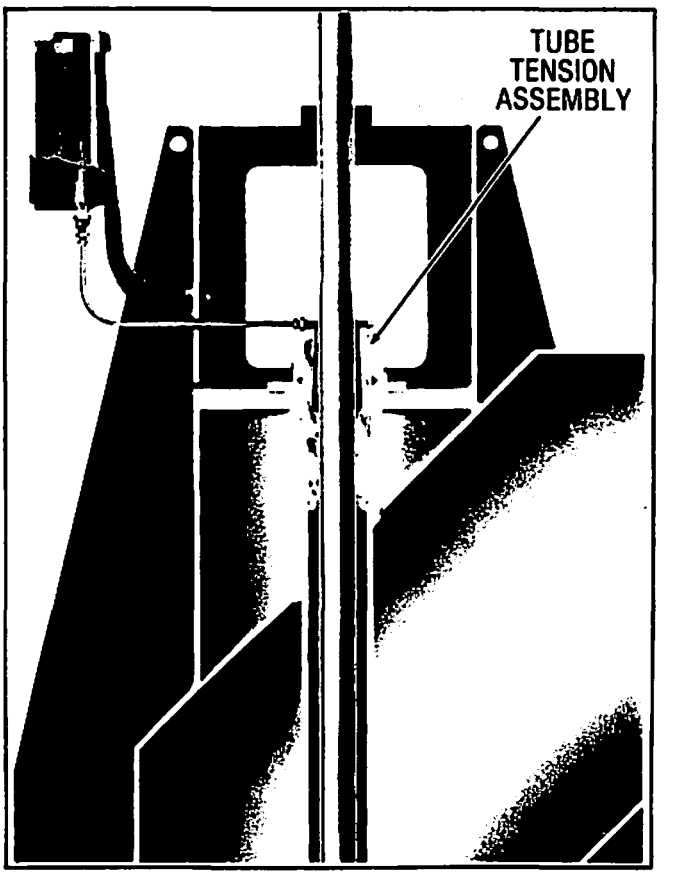

Figure 14. Tube Tension Assembly

Meanwhile, if there is ever any reason for you to relieve the tension on the tube, be sure to mark the position of the nut flange with respect to its mounting surface in the head. With this as an indicator, you can reload the tubing to the same tension when you reassemble.

If your pump is of open lineshaft construction, it will be furnished with a packing box, Figure 15, instead of a tension nut. The box is completely assembled and installed at the factory. Before first startup, see Section 13 for run in procedure and directions for maintenance and repacking when necessary.

Examine the position of the pump. The suction bell must hang the proper distance from the sump bottom and be unobstructed. Piping connections must be in the right orientation with respect to jobsite plumbing. The whole unit must hang plumb and true; if not, use wedges and/or shims until it does.

When you're satisfied with the position of the equipment, skip Section 8 and go on to the appropriate portion of Section 9.

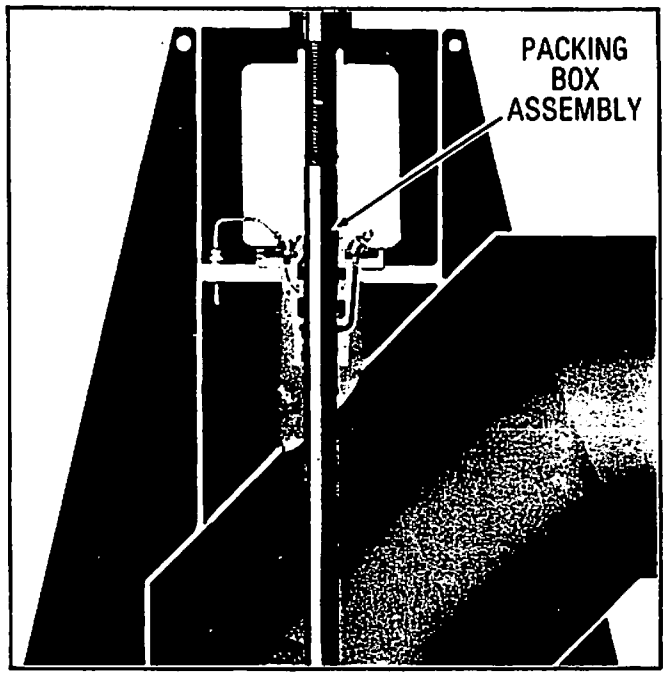

Figure 15. Packing Box Assembly

SECTION 8

INSTALLING THE PUMP

UNASSEMBLED UNIT

You're now ready to start actual installation. Clear the work area at and around the mounting position so installers can move freely and with maximum safety. This will also descrease the chances for foreign material or objects to enter the pump as it is lowered into position and secured.

During the course of the work, you must never lose sight of the fact that you are handling precision components no matter how awkward they may be to manipulate. All threads should be engaged by hand and checked before tightening. Damage resulting from cross threading or dirt must be repaired with a file before applying force. If not repairable, the part must be replaced so it's clearly worth your while to use utmost care.

a. Enclosed Lineshaft Construction

Examine the bowl assembly to determine that all stage connecting nuts or capscrews have been taken up securely. Inspect the bypass ports in discharge bowl to make sure they are open clear through to the shaft and not plugged in any way. This may be done by probing a wire into the port and through the passage. See Figure 16.

Determine the amount of bowlshaft endplay and record it. You can do this by pushing the shaft all the way into the bowls and mark it where it emerges from the top fitting. Then pull the shaft out manually as far as it will go and measure the distance your mark has travelled. This is endplay or bowl lateral. We'll want to check your record later.

Using elevators under the top flange or properly sized eyebolts through the flange, raise the bowl assembly as illustrated in Figure 17, controlling the lower end with a rope drag line. If you have a strainer, this is the time to attach it to the suction bell. Suspend the load directly over the mounting position and lower until the elevators or the flange rest securely on the beam clamps, as shown in Figure 19. Never lift the assembly with the cast lugs, if any, on the individual bowl casings. These are adequate only for handling the disassembled part by itself.

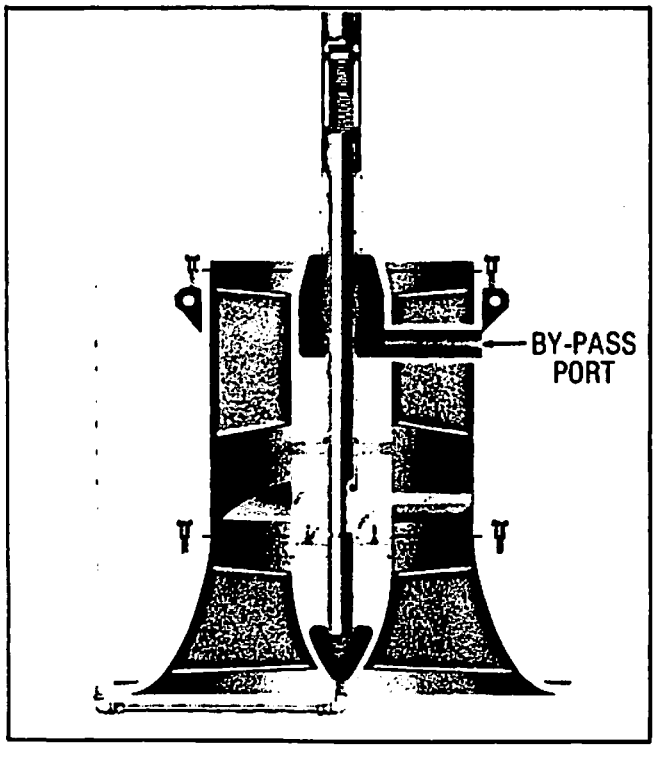

Figure 16. Inspecting By-Pass Port

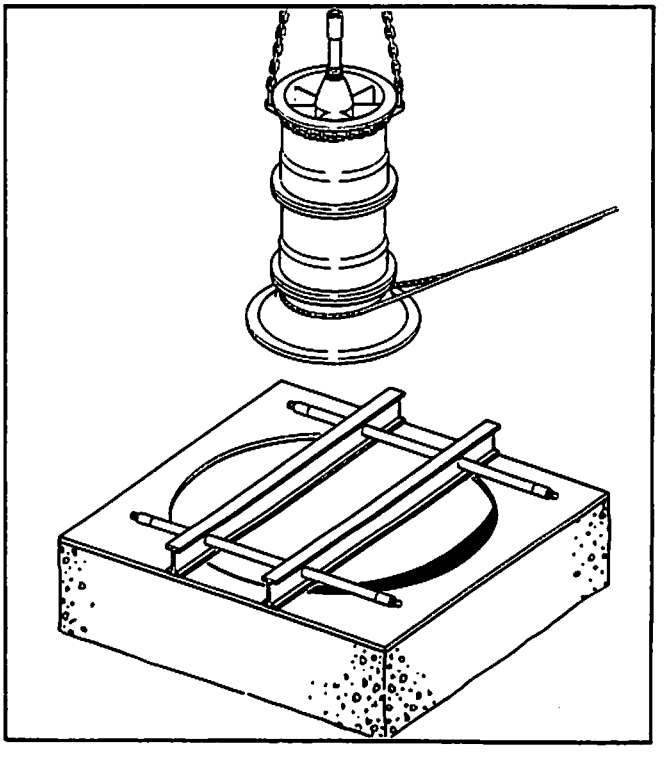

Figure 17. Raising Bowl Assembly Over Well

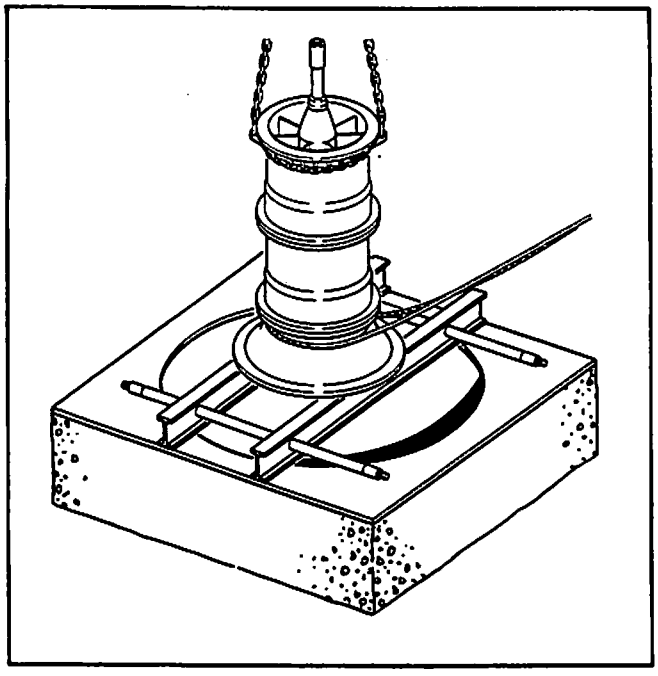

Figure 18. Bowl Assembly Resting on Beam Clamps

Remove the shaft protector tube, shown in Figure 19, from the top of the bowl assembly. Clean and inspect all exposed threads and faces. The tube adapter should project exactly half its length from the discharge bowl hub unless it has a shoulder to butt solidly against the hub. Do not attempt to handle the assembly by the shaft, now or at any other time.

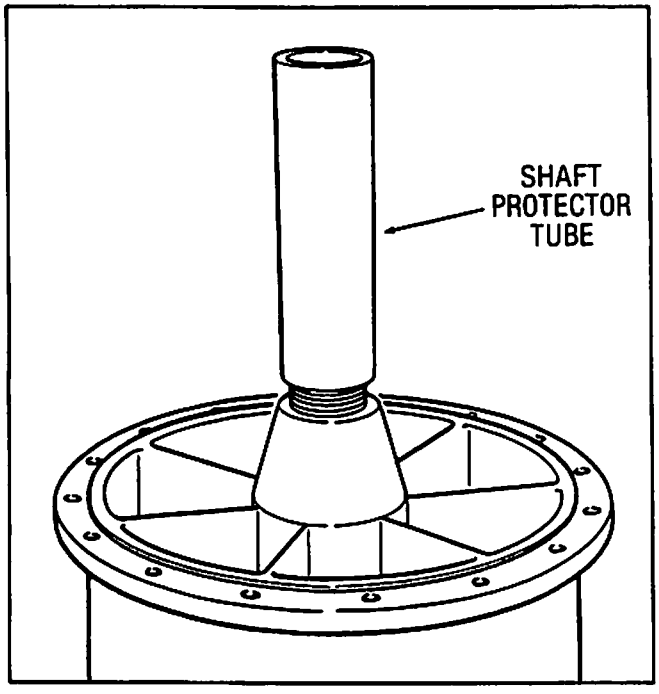

Figure 19. Shaft Protector Tube

If something is dropped into the pump at any time during the installation, you must retrieve it before going any farther. You might even have to return everything to the surface to do this. This is why we caution you to keep the open end of the pump covered at all times. Stuff sacking into the opening or use a cover designed specifically for the purpose. Stuff a clean rag into the open end of the shaft coupling. Remember of course to remove all this as the joint is made up.

Secure the elevators to the bottom column assembly below the flange. Again you may use proper eyebolts through the flange if you prefer. Using a hemp rope, secure a timber hitch knot around the pipe about one foot from the end away from the mounting position. Place a double half hitch knot around the tubing, and a reverse double half hitch knot around the shaft and over the threads to prevent slipping. This is illustrated in Figure 20.

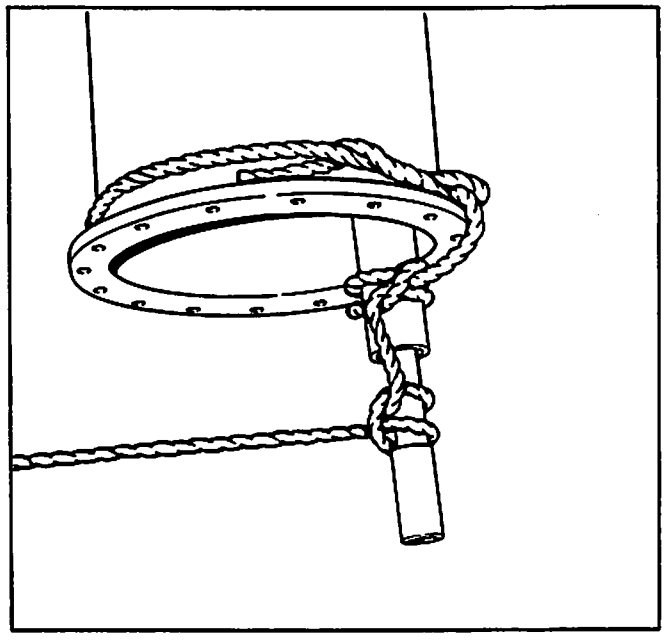

Figure 20. Securing Enclosed Lineshaft Assembly

Hoist the column assembly into place above the mounting position as shown in Figure 21. You must keep the free end of the tail rope taut at all times to prevent dropping the shaft. A soft board or pipe dolly should be laid out for the end of the pipe to slide in on, restrained by the tail rope, so that the flange face will not be damaged as the section is being raised. Clean all the threads and inspect the faces of the pipe, shaft, and tube to be sure there are no burrs, nicks, or dirt. Paint the shaft and tube threads with thread lubricant. If parts are stainless steel, use only an approved anti-galling compound.

Lower the parts until the shaft sits firmly on its coupling and start threading it in by hand. Remove the rope from shaft only and continue threading the shaft

in until it butts solidly, remembering the threads are left hand. Make sure the shaft ends are together but don't use undue force. As shown in Figure 21, lock shafts firmly with two small pipe wrenches, using one wrench on the coupling and the other on the shaft just above the thread with the wrench handles parallel to avoid pulling shaft off center. Never apply wrench jaws to threads or to any area that might run in a bearing or packing. Do not allow coupling to ride up on last scratch or imperfect thread. Both shafts should expose an equal length of thread above and below the coupling, indicating that the shaft butt is in the exact center. If unusual power is required, stop and look for damaged or dirty threads since forcing may cause misalignment and eventual malfunction.

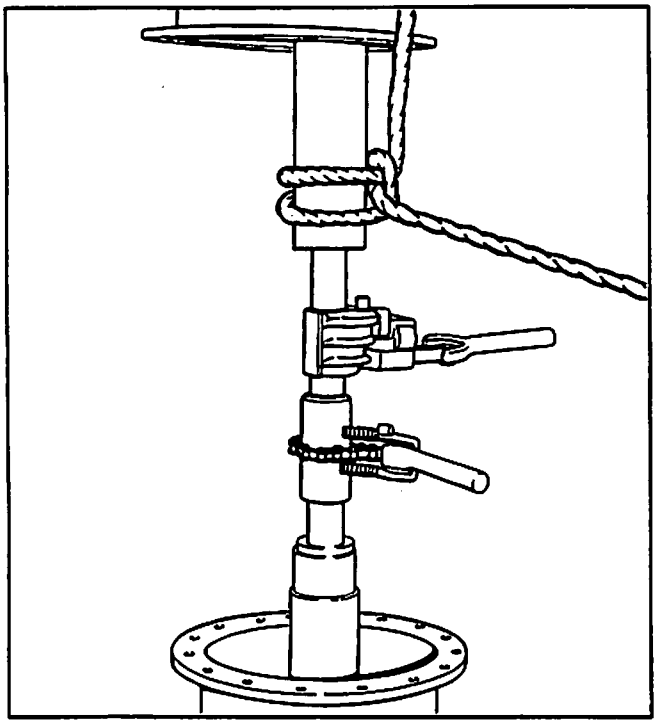

Figure 21. Connecting Enclosed Lineshaft Assembly

Lower the enclosing tube to the tube adapter and start the threads on by hand. Remove the rope and continue threading the enclosing tube on with a small pipe wrench or chain tong, remembering these are right hand threads. On the following tube sections, two wrenches or tongs should be used. One is to hold the lower tube stationary while the other tightens the upper section into place onto the projecting lineshaft bearing. Keep the wrench handles parallel. Remove the cover material.

Now you can lower the column pipe, engaging the registers and seating the flange faces firmly. Insert all bolts not obstructed by the elevators or eyebolts and tighten the nuts uniformly. When you have enough bolts to carry the weight of the assembly safely, remove the lower elevators and assemble the rest of the bolts, making sure all holes are filled and that all nuts are secure. Lower the pump until it again rests on the beam clamps.

You may repeat this procedure for each succeeding column section. In working with flanged column pipe and pieces with similar configuration, be particularly conscious of the pulloff effect where the chains or sling bear against the flange rim. Scoring or chafing will reduce the strength of your sling considerably and must be avoided.

The discharge elbow/mounting base section is usually shipped to you with the tension nut, seen in Figure 22, assembled. Remove this assembly and store in a clean safe place except for the long tube connector, Item 254, which you may now assemble to the top tube parcel as another tubing joint. If a lock collar, Item 258, is furnished, it must be in position on the connector before the connector is joined to the tubing. Leave the lock collar setscrews loose at this time. Find the top lineshaft and insert it into the tube assembly.

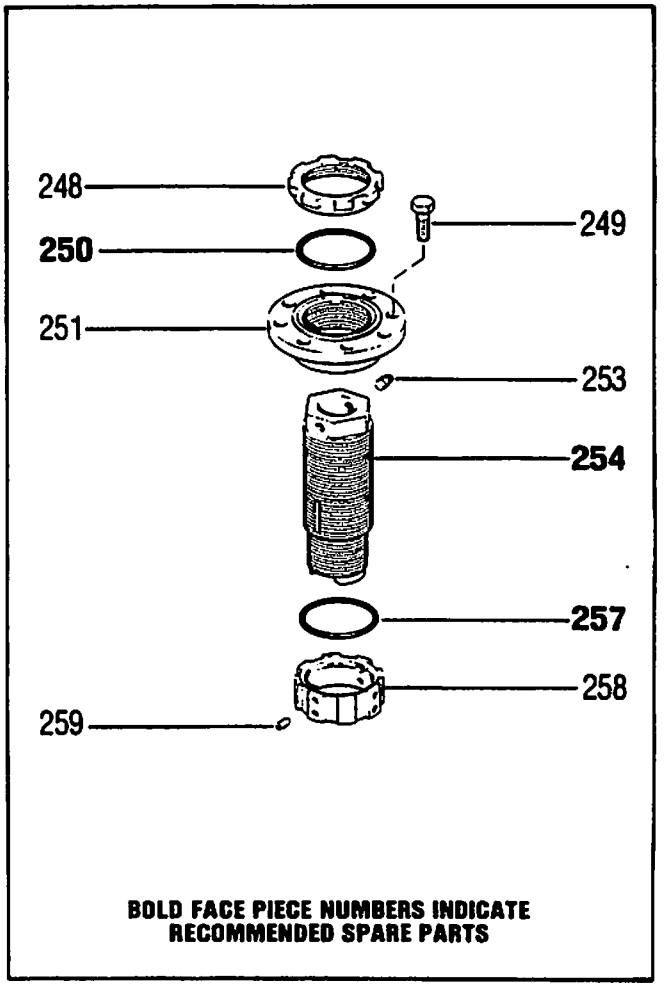

Figure 22. Tube Tension Assembly

Slide the top inner column assembly into the elbow/mounting base section and join the bottom end to the pump column in the manner described for all column joints. From this point on, the pump must be handled with the lifting lugs on the discharge head, as depicted in Figure 13. Never lift with eyebolts tapped into the holes for securing the driver. They're inadequate to support the weight.

Clean the bottom face of the mounting plate and, if the pump is to be grouted, apply a heavy coat of grease to the underside. Raise the load a few inches to remove the beam clamps and elevators, then let it down slowly and carefully, positioning the base with respect to the discharge piping system, if any, and engaging the anchor bolts, if used. Continue to lower until the base contacts the foundation and the weight of the pump is transferred to the mounting structure. Effect this transfer very gradually without a bump. Be sure the pump is in a plumb vertical position with full contact base to mounting surface. Assemble the nuts loosely to anchor bolts.

The projecting tube connector and headshaft will probably have sagged to one side of the opening through the head. Make sure you can center them easily by hand. Examine and clean threads and flange surfaces of tension nut, Item 251, Figure 22. Inspect the mating face in the discharge head for any burrs, rough spots, or projections, especially at the location of the tapped holes. Clean with a file where necessary. Apply thread lubricant and grease flange face. Thread the tube tension nut, Item 251, down over the connector, Item 254, and into position firmly, engaging register fit. You may have to remove the pipe bushing and plug, Item 253, from the ports at the top of the tube connector to do this. If so, lay them aside in a safe place for the time being. During this phase of work with the tubing, protect the protruding shaft at all times.

Slip the tube tension wrench Figure 7 carefully down over the shaft and tube until the wrench pins engage two capscrew holes in the tension nut flange. With chain tongs around the wrench body, turn the nut clockwise one sixth of a turn for each ten feet of tubing, thus effectively stretching the tube assembly, forcing it to remain straight and taut.

When the tension nut is properly seated, oil the capscrews, Item 249, and thread them firmly into position to secure the flange to the discharge head. If your pump is furnished with a tubing lock collar, Item 258, back it down the connector, Item 254, far enough to insert the packing ring, Item 257, working through the discharge opening in the head. Then screw the collar back up on the connector until it butts against the tension nut, Item 251. Back the collar off very slightly until the setscrews, Item 259, line up with the first keyway on the connector. Tighten the setscrews securely.

You may now place the packing ring, Item 250, in the chamfer in the top of the tension nut around the connector threads. Assemble the tubing locknut, Item 248, with its chamfered face down and tighten by hand very carefully so the packing ring remains properly seated as the nut is brought down against it. The final tightening of the nut may be done with a spanner wrench or by tapping the nut with a block of wood and a hammer. Never tap the nut with a metallic object.

Your tubing joint is now complete. You may reassemble the pipe bushing and plug, Item 249, in the oil ports in the position most convenient for the oil line from the reservoir.

You have also completed this phase of the installation. Skip Section 8b and go on to Section 9 for the next procedure.

b. Open Lineshaft Construction

Examine the bowl assembly to determine that all stage connecting nuts or capscrews have been tightened securely. Inspect bypass ports in discharge bowl to make sure they are closed. Refer to Figure 23.

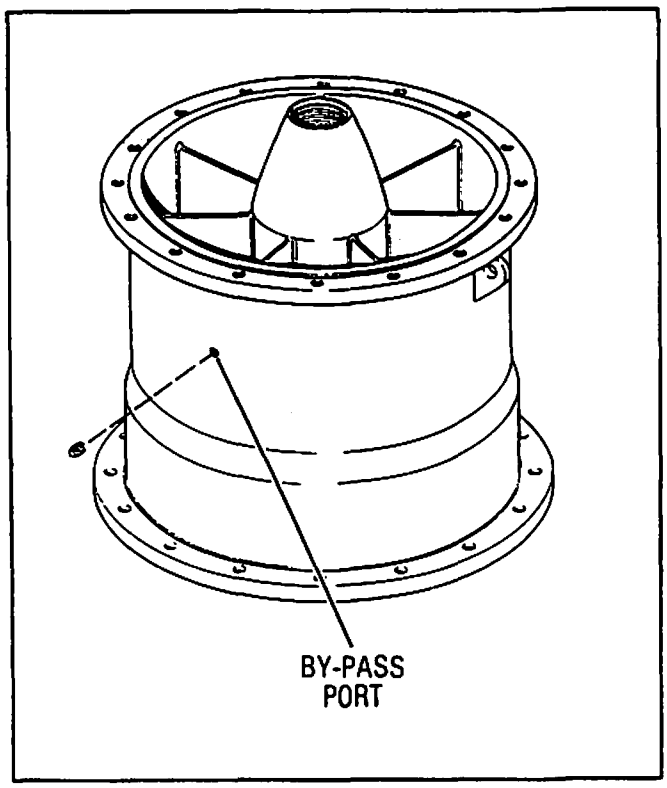

Figure 23. Propeller Bowl Assembly

Establish the amount of bowlshaft endplay and record it. You can do this by pushing the shaft all the way into the bowls and mark it where it emerges from the top fitting. Then pull the shaft out manually as far as it will go and measure the distance your mark has travelled. This is endplay or bowl lateral. We'll want to refer to your record later.

Using elevators under the top flange or properly sized eyebolts through the flange, raise the bowl assembly as illustrated in Figure 24, controlling the lower end with a rope drag line. If you have a strainer, this is the time to attach it to the suction bell. Suspend the load directly over the mounting position and lower until the elevators or the flange rest securely on the beam clamps. See Figure 18. Never lift the assembly by using the cast lugs, if any, on the individual bowl casings. These are adequate only for handling the disassembled part by itself.

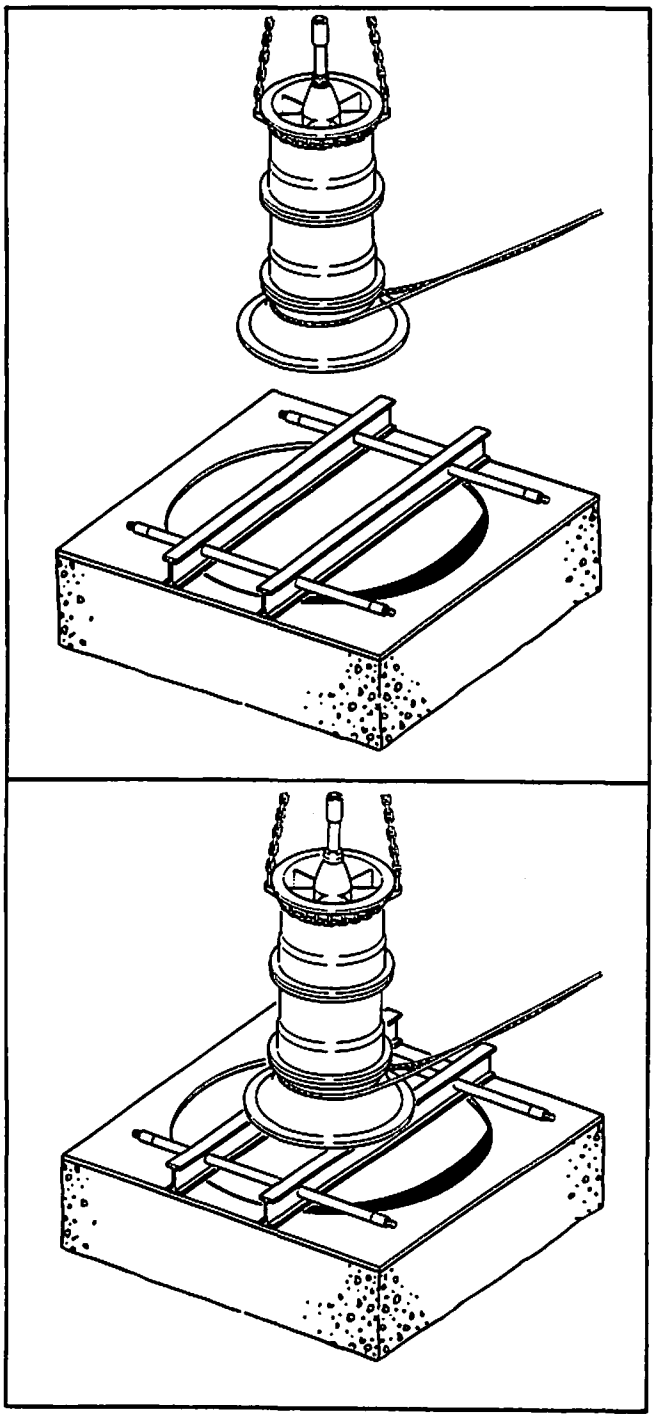

Figure 24. Positioning Bowl Assembly

If something is dropped into the pump at any time during the installation, you must retrieve it before going any farther. You might even have to return everything to the surface to do this. That's why we caution you to keep the open top of the pump covered at all times. Stuff sacking in the opening or use a cover specifically designed for the purpose. Stuff a clean rag into the open top of the shaft coupling. Remember of course to remove all this just before the joints are made up.

Secure the elevators to the bottom column assembly, below the flange. Again you may use proper eyebolts through the flange if you prefer. Using a hemp rope, secure a timber hitch knot around the pipe about one foot from the end, away from the mounting position and a reverse double half hitch knot around the shaft over the threads to prevent slipping. This is illustrated in Figure 25.

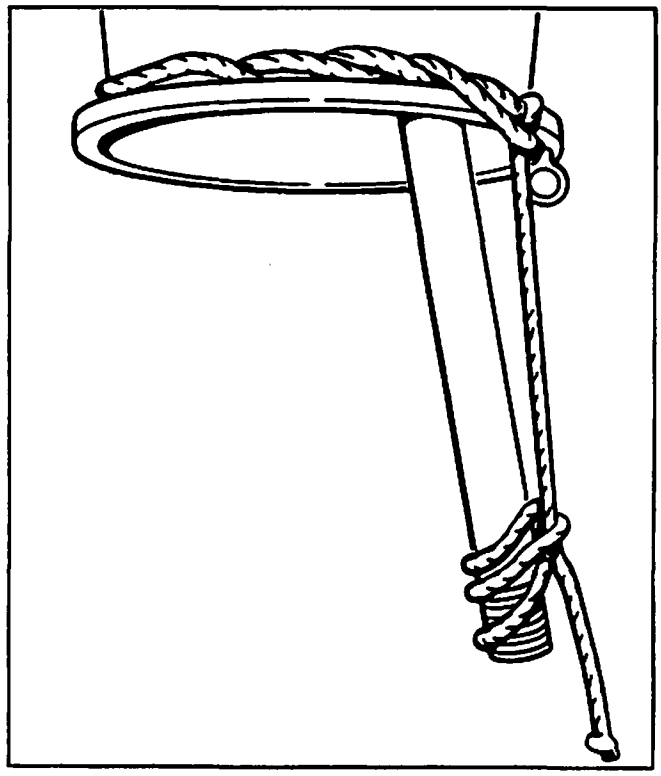

Figure 25. Securing Open Lineshaft Assembly

Hoist the column assembly into place above the installation position. You must keep the free end of the tail rope taut at all times or you'll drop the shaft. A soft board or pipe dolly should be laid out for the end of the pipe to slide in on, restrained by the tail rope, so that the flange face will not be damaged as the section is being raised. Clean the shaft threads and inspect the faces of shaft and pipe flanges to be sure there are no burrs, nicks, or dirt. Paint the shaft threads with a thread lubricant. If parts are stainless steel, use only an approved anti-galling compound.

Lower the parts until the shaft sits firmly on its coupling, as shown in Figure 26. Start the threads in by hand, keeping in mind they are left hand. Remove the rope and continue threading the shaft in until it butts solidly. Make sure the ends are firmly together but don't use undue force. As in Figure 27, lock the shafts securely with two small pipe wrenches, one on the coupling and the other on the shaft just above the thread, with the handles parallel to avoid pulling shaft off center. Never apply wrench jaws to the threads or to any area of shafting that might run in a bearing or packing. Don't allow the coupling to ride up on last scratch or imperfect thread. Both shafts should expose an equal length of thread above and below the coupling, indicating that you have the shaft butt in the exact center. If unusual power is required, stop and look for damaged or dirty threads since forcing may cause misalignment and eventual malfunction.

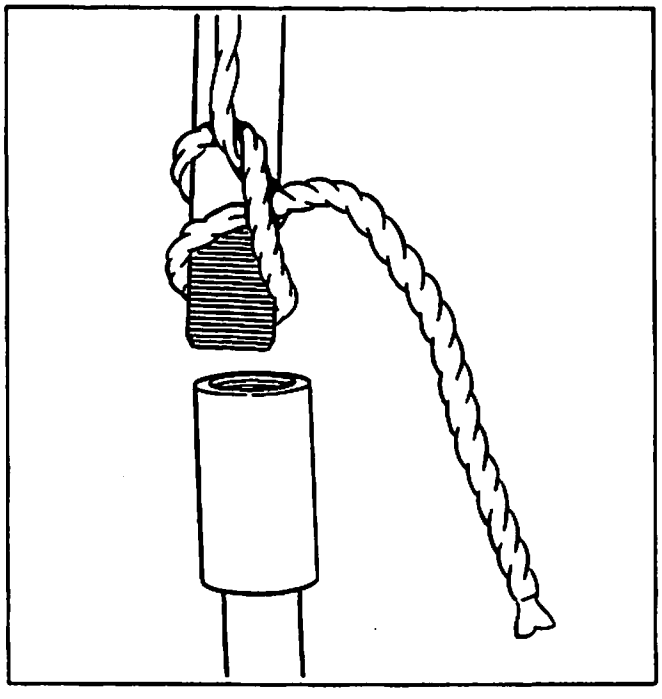

Figure 26. Joining Open Lineshaft

Now you can lower the column pipe, engaging the registers and seating the flange faces evenly. Insert all bolts not obstructed by elevators or eyebolts and tighten the nuts uniformly. When you have enough bolts to carry the weight of the assembly safely, remove the lower elevators and assemble the rest of the bolts, making sure all holes are filled and that all nuts are secure. Lower the assembly until again it rests on the beam clamps.

Wipe the upper end of the shaft clean of oil to a point several inches below the journal. After this point on the way in, don't let oil run down the shaft or into the pipe as it will deteriorate the rubber lineshaft bearing. If the lineshaft bearings in your pump are secured in a hub fastened to the column pipe by welded ribs, Figure 28, the bearings will install as part of the pipe assembly.

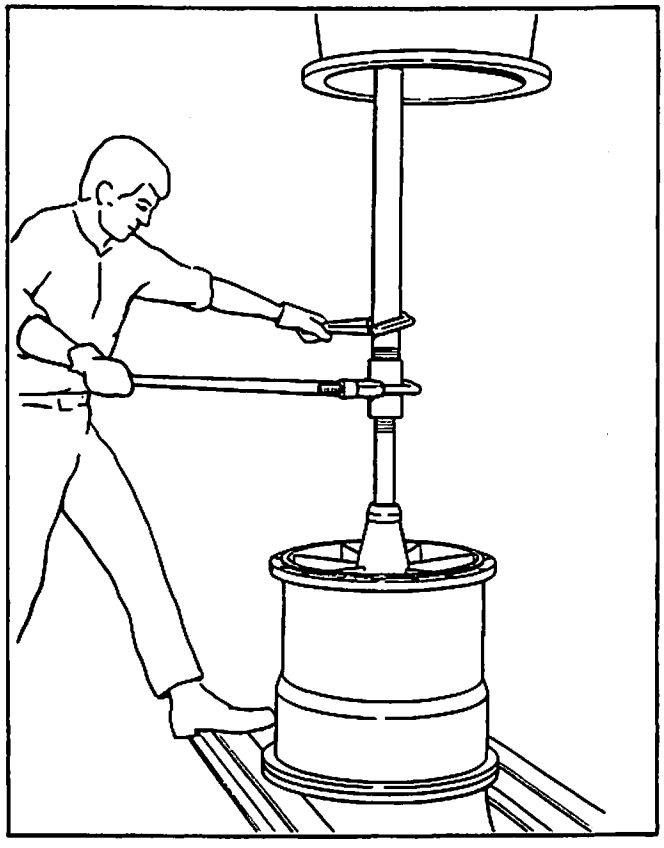

Figure 27. Connecting Open Lineshaft Assembly

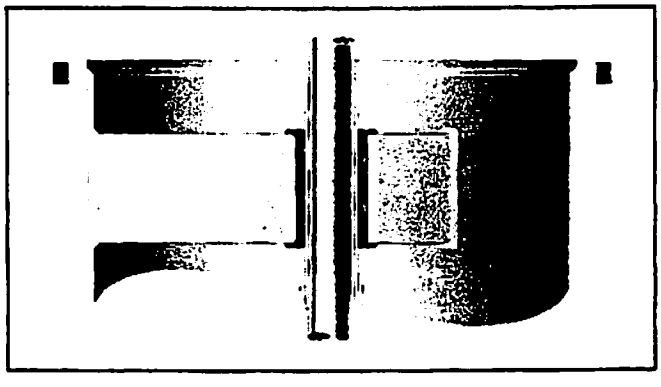

Figure 28. Open Lineshaft Bearing Welded Configuration

However, if your lineshaft bearings are assemblies separate from the pipe, Figure 29, you must install them in the top of each pipe joint. Place a lineshaft bearing over the projecting end of the shaft. Slide the parcel down until the retainer rim seats solidly in the column flange register. Check to see that the rubber bearing is located properly over the shaft journal. It should be possible to center the shaft so as to insert the

spider rim into the register with little or no force. If the shaft bears heavily to one side, investigate immediately for cause before proceeding. Never continue with installation if shaft does not center freely at bearing retainer as this indicates a misaligned column pipe or bent shaft, either of which will eventually cause trouble.

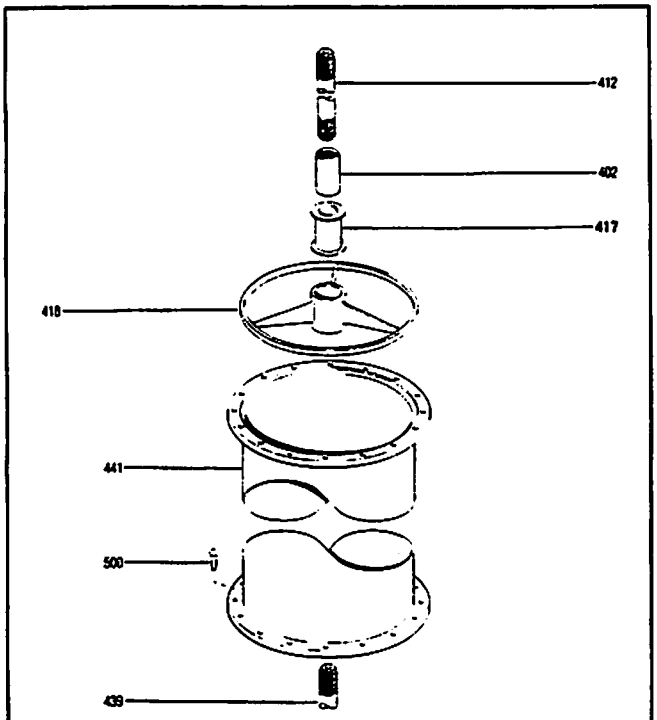

BOLD FACE PIECE NUMBERS INDICATE RECOMMENDED SPARE PARTS

Figure 29. Open Lineshaft Bearing, Separate Configuration

When all is centered properly and the journal location is acceptable, cover the open pipe end and proceed with installation of the next column section. Repeat the same procedures with all additional sections. Note, with the separate bearing retainer assembly, the pipe flanges must clamp the retainer rim securely.

The discharge elbow/mounting base section is usually sent to you with the packing box, seen in Figure 15, assembled. Remove this assembly complete with its gasket and capscrews and store in a clean safe place. Insert the top lineshaft into the elbow/base section and join the bottom end of the resulting assembly to the pump column in the manner described for all column joints. From this point on, the pump must be handled by the lifting lugs on the discharge head shown in Figure 22. Never lift with eyebolts tapped into the holes for securing the driver. They're inadequate to support the weight. Clean the bottom face of the mounting plate and, if pump is to be grouted, apply a heavy coat of grease to the underside.

Raise the unit a few inches to remove the beam clamps and elevators, then let down slowly and carefully, positioning the base with respect to the discharge piping system, if any, and engaging the anchor bolts if used. Continue to lower until the base contacts the foundation and the weight of the pump is transferred to the mounting structure. Effect this transfer very gradually without a bump. Be sure the pump is in a plumb vertical position with full contact base to mounting surface.

Retrieve the packing box assembly, shown in Figure 30. Place the gasket, Item 246, in position on the mounting flange in the discharge elbow. Loosen the gland, Item 224, by backing off the gland nuts, Item 222, slightly. Slip the box very slowly and cautiously down over the shaft and into place in the elbow with the flange seated firmly and evenly. The shaft should center and allow the box to enter the register without forcing. Oil the capscrews, Item 234, and use them to secure the flange evenly.

Before first startup, study the run in procedure described in Section 13. Again check the installation to make sure the pump hangs plumb and that the shaft is easily centered without force. It should be possible to correct deviation in either of these areas by proper use of wedges and/or shims under the base.

When all is satisfactory, go on to Section 9 for the next procedure.

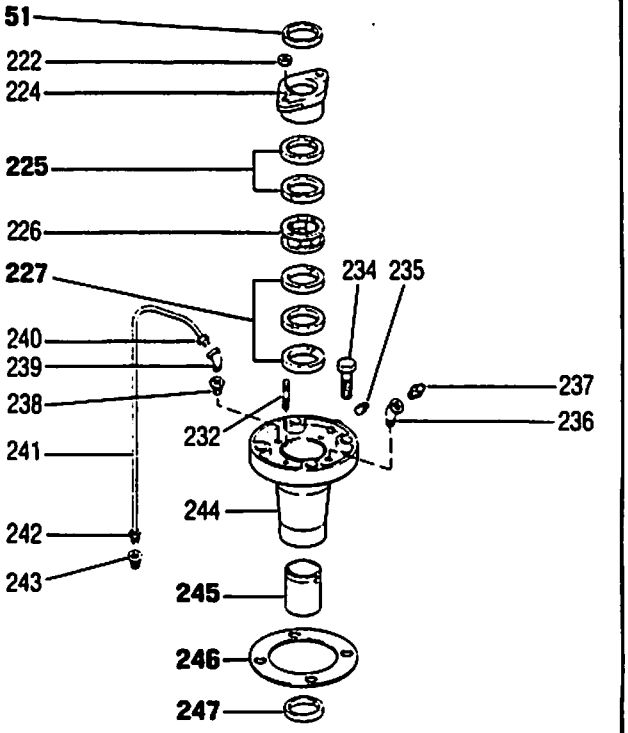

BOLD FACE PIECE NUMBERS INDICATE RECOMMENDED SPARE PARTS

Figure 30. Packing Box Assembly

SECTION 9

LUBRICATING THE PUMP

a. Gravity Flow Oil

If your pump is designed for gravity oil lubrication with an enclosing tube around the lineshaft, examine the oil reservoir and the oil feed line, making sure they are clean and without obstruction. Figure 31 will show you the parts involved. Attach the reservoir assembly, Item 204, to the driver pedestal by its bracket, using capscrews, Item 218, and placing dampener gasket, Item 219, between bracket and mounting surface. If may be necessary to interchange the sight gauge assembly with the oil line fittings to make the routing to the tube connector in the most convenient way.

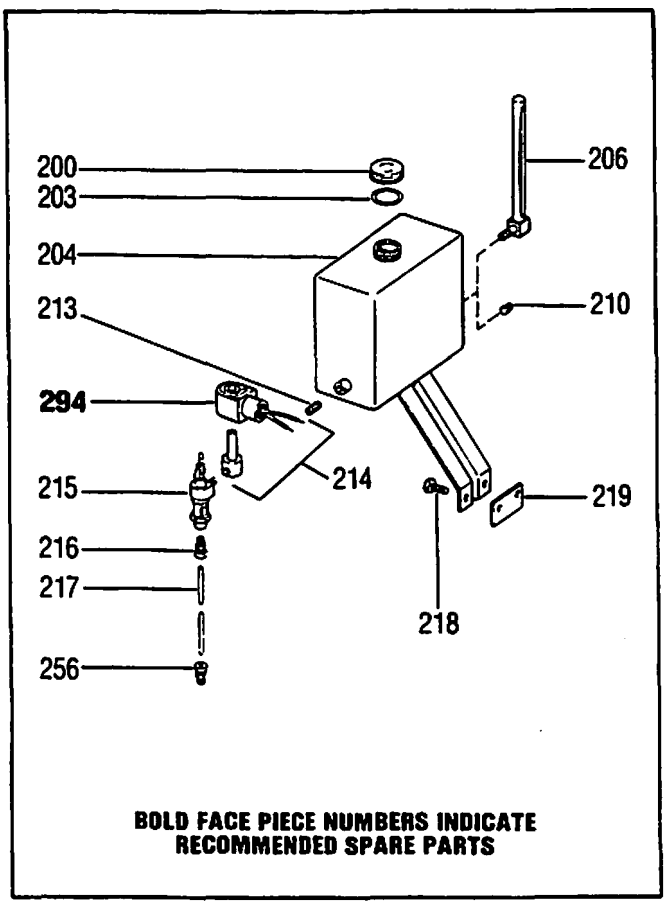

Figure 31. Lubricator

If your lubrication system is automatic, you will have Item 294, as shown in Figure 31. If system is manual, this part is not needed. Keep the cover assembly on the reservoir at all times to prevent entrance of foreign material.

Connect up lubrication system as illustrated in Figure 32 using the parts depicted in Figure 31. Adjust the lubricator valve, Item 215, to permit oil to drip at the rate of approximately one drop per second. With automatic lubricators, you'll have to complete the electrical connections to the solenoid valve, Item 294, so it can be operated to allow flow of oil to the lubricator valve, Item 215.

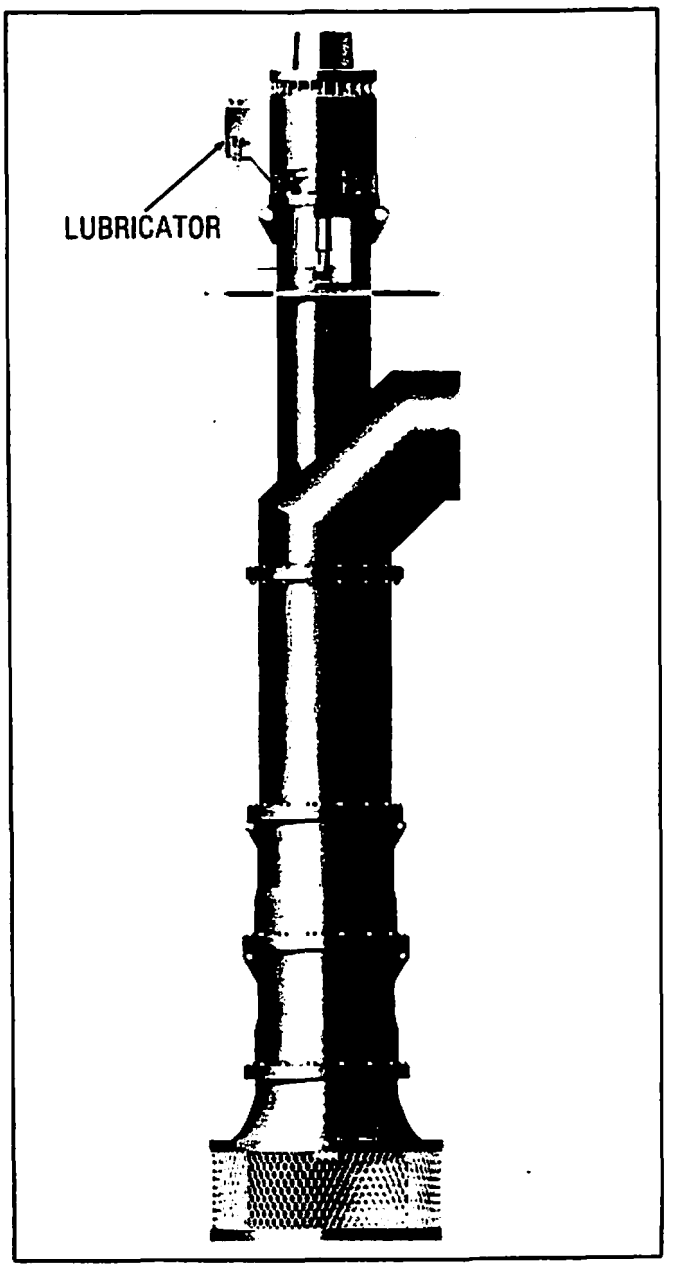

Figure 32. Lubricator Location

If it isn't practical to energize the solenoid at this time, you'll have to prelubricate the pump manually. Remove the pipe plug in the top of the tube connector and fill the upper cavity with approved turbine oil at least three times so the oil will run down into the enclosing tube.

Before first start, verify that the oil reservoir is full and that the lubricant can flow freely into the enclosing tube. Allow oil to drip for fifteen minutes while checking all related procedures to be sure all is ready for startup. After starting, be sure the oil continues to drip into the pump during operation. You may find it necessary to apply a small amount of oil from a can to the point where the shaft emerges from the tubing in the discharge head. This should only be required during the first few minutes of operation.

After logging about one half hour running time, adjust the flow on the manual lubricator to about thirty drops per minute and run at this rate for the first ten operating hours. When a solenoid control is not furnished, shut off manual lubricator during idle periods. After running successfully for about ten hours, reduce oil flow rate to eight drops per minute maximum for permanent operation.

b. Pumped Liquid

If your unit is designed to be lubricated by the pumped liquid, there is little if anything for you to do since the pump is, in effect, self lubricating. All it requires is an adequate supply of cool, non-aerated liquid, free from suspended solids or gases in solution. All you need do before installation is to make sure the bypass ports in the discharge bowl are closed as described in Section 8b.

If your pump must be idle for any prolonged period, the shaft should be rotated by hand once a week. If you prefer, you can instead spin the shaft under power once a week provided you have adequate liquid over the pump suction.

Your packing box has a grease fitting in the top. It is not often necessary to use this fitting and you can usually ignore it. If you use it to lube the box bearing at all, apply the grease sparingly. Too much will interfere with cooling water flow through the box.

If the fluid you are to handle is something other than water, or if you expect temperature to be higher than normal, we will have furnished bearings suited specifically to that kind of service provided we knew about it. However, if your pump has been designed for a given application, we can't recommend your switching it to a different environment without first checking with the factory or your Aurora representative.

c. External Source Pressure Lubrication

You may have ordered your Aurora Verti-Line propeller pump equipped for connection to an external source of pressurized lubricating liquid. If so, refer to this subsection and Figure 33. In our description here, we'll deal with water as the lubricant, though any suitable lubricating fluid will do so long as it's compatible with your bearing material. Be sure to use the lubricant for which your pump was originally designed.

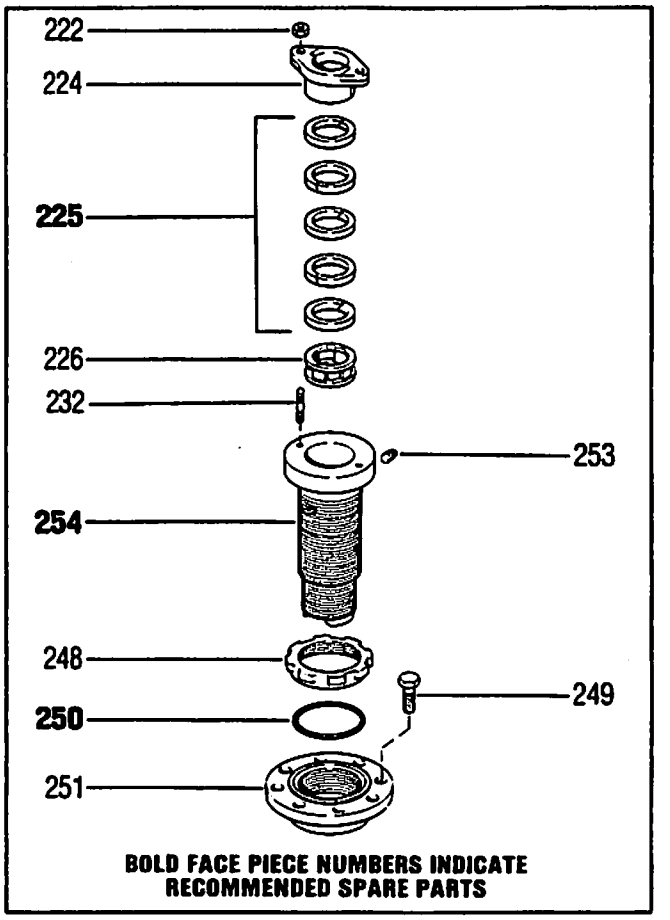

Figure 33. Packed Tube Tension Assembly

This construction usually features a shaft enclosing tube terminating in a tension nut assembly in the discharge head. Like a similar part described in subsection 8a, this assembly is usually installed at the factory where the proper tension has already been applied to the tube for you. However, as you can see in Figure 33 the tube connector, Item 254, has a packing chamber at the bottom of which is placed a lantern ring, Item 226, ported to receive the lubricating water and direct it down the tube to the line shaft bearings. Above the lantern cage are rings of packing, Item 225, in sufficient number to locate the gland, Item 224, properly in the top of the container.

As a tension nut, this assembly is treated the same as we suggested in subsection 8b. If there is ever any

reason for you to relieve the tension on the tube, be sure to mark the position of the nut, Item 251, with respect to its mounting surface in the head. With this, you can reload the tubing to the same tension magnitude when you reassemble. As a packing box, the connector will respond to the same general treatment we'll describe in Section 13.

If your external lubrication system is of the low pressure variety, make sure the bypass ports in the discharge bowl are open before you install the pump. For most applications, you'll need to furnish three to five gallons per minute of lubricating water at 40 to 50 PSIG source pressure to lubricate and cool the lineshaft bearings. This flow is injected into a port on the side of the connector, Item 254. A pressure gauge on your source will only indicate system backpressure so it may not show the forty pound value we've mentioned. We recommend you have this much available should you need it.

If your system is a high pressure design, the bypass ports in the discharge bowl will be plugged. You should verify this before installation of the pump. In this design, lubricating water must be admitted to the tubing under heads greater than that generated in the bowl assembly. Higher pressures will of course necessitate more frequent maintenance of packing. Do not exceed 125 PSIG injection pressure without first checking with the factory.

In either the low or the high pressure systems, we recommend you incorporate a positive indicating flowmeter and an alarm arrangement to warn of any interruption in flow of lubricating water. If flow stops, the pump must be shut down immediatley until the malfunction is cleared. Otherwise, serious damage will result.

d. Fresh Water Flush

If you're going to pump fluids containing abrasive particles, you'd be well advised to inject clean liquid directly into the journal areas to provide lubrication and cooling as well as to prevent entrance of abrading material into bearing zones. If you ordered your pump equipped for this service, we will have provided means for you to flush bearings continuously with clean or filtered water.

As in subsection 9c, we recommend very strongly you incorporate a positive indicating flowmeter and an alarm arrangement to warn of any interruption in flow anywhere in the lubricating system. If flow to any journal area stops, the pump must be shut down immediately until the malfunction is cleared. Otherwise serious damage may result.

Although this option is referred to as a fresh water flush system, you can use any approved lubricant that is compatible with the pumped liquid and with your bearing material, and so long as flow and pressure conditions permit. In general, for water, you should be prepared to furnish about one gallon per minute for each journal to be served up through one inch shaft diameter; you'll need two GPM for each journal from one through two inch, nearly 5 GPM per journal through three inch. Above these sizes, it's best to consult the factory.

Figures 34 and 35 will give you an idea what to expect in the way of external piping for this system. Figure 34 illustrates the bowl assembly in which the suction case is provided with a port in the bottom of the hub through which flush water may be injected. The bowls themselves may be cast with a port leading from the outside through a flow directing vane into the bearing area. Obviously such bowl assemblies must be ordered in this condition so the necessary porting will be provided. Assembled units are usually shipped with the piping in place as in Figure 35 but occasionally it may be required for you to install at the jobsite. When you handle these units with external piping, take care to avoid damage to pipe or tubing. Pinching or perforating a line could render the lubrication system inoperative.

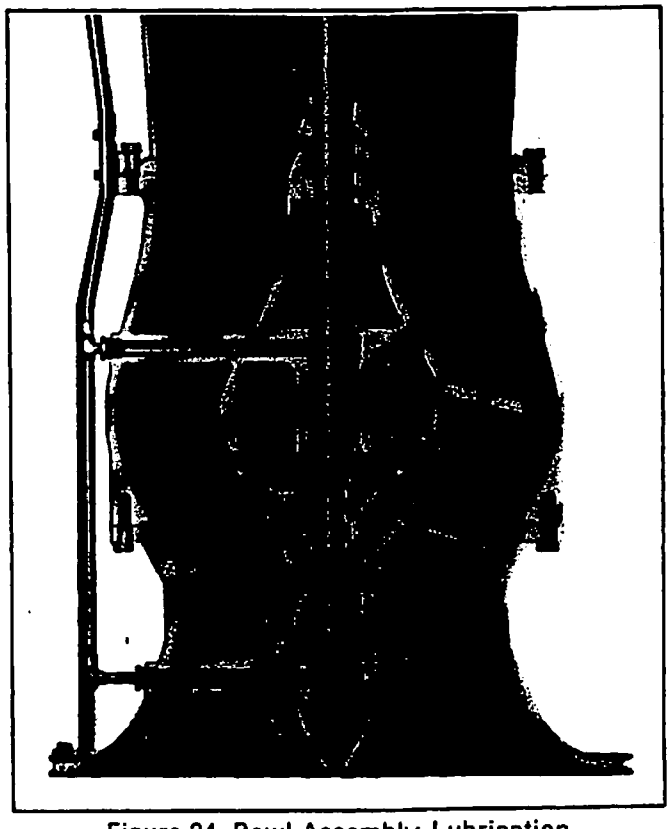

Figure 34. Bowl Assembly Lubrication
(Mixed Flow Pump Illustrated)

The flushing liquid must be free from abrasives and other foreign particles, must have adequate lubricating properties to do the job, and should be kept below 85° F in temperature. The liquid must be injected at a pressure in excess of that existing across the journal area

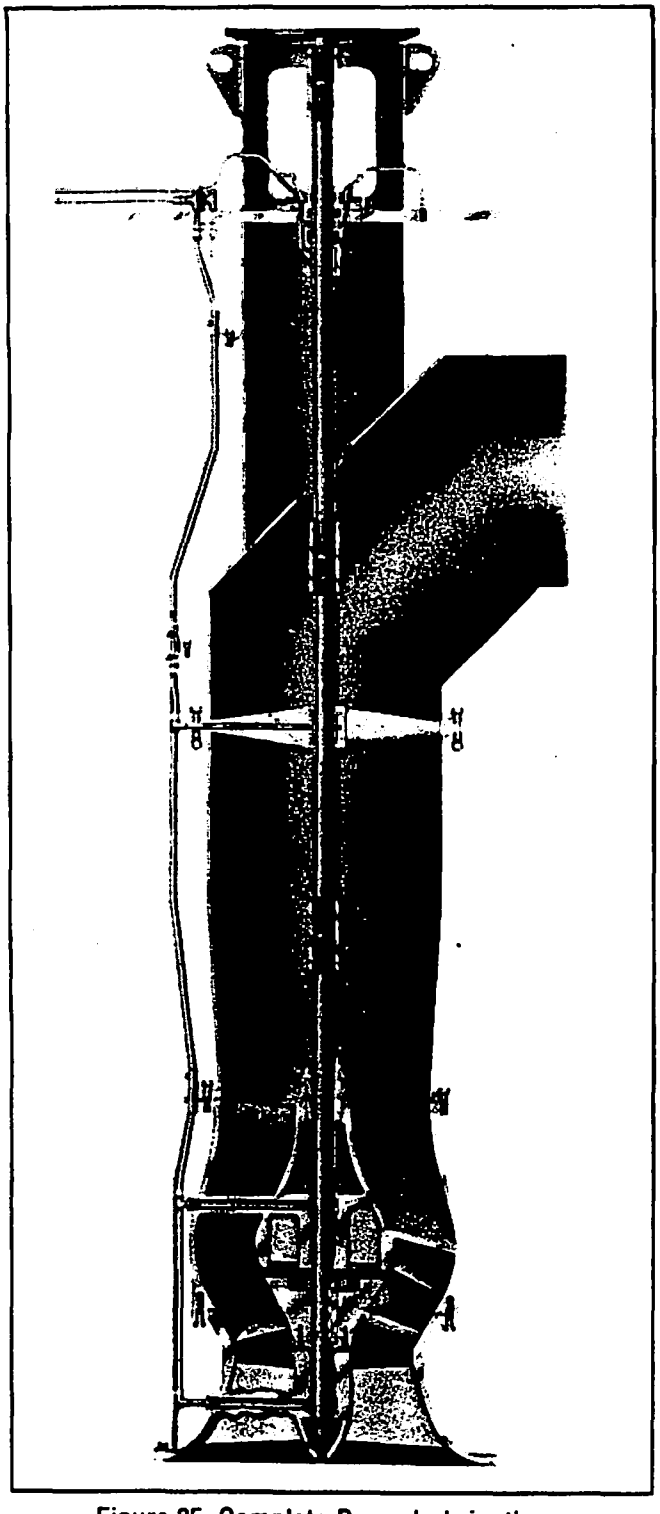

Figure 35. Complete Pump Lubrication - Open Lineshaft
(Mixed Flow Pump Illustrated)

to which it is ported. This usually means something greater than the total discharge head against the pump.

Open lineshaft bearings, if necessary, may be protected in much the same way as illustrated in Figure 36. Again piping is connected as shown and run to

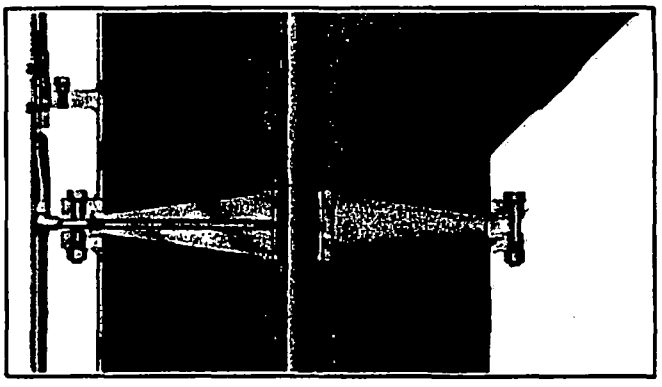

Figure 36. Open Lineshaft Bearing Lubrication

bearing from surface source of supply. Flush water must be injected into bearing at a pressure in excess of that existing in the column pipe at that point.

Flushing at the packing box may be accomplished in a manner as depicted in Figure 37. You can make similar arrangements for mechanical seals, Figure 38. Occasionally, you may want to use a water flush design in connection with tube enclosed construction and you may accomplish this by an extension of the system described in subsection 9c.

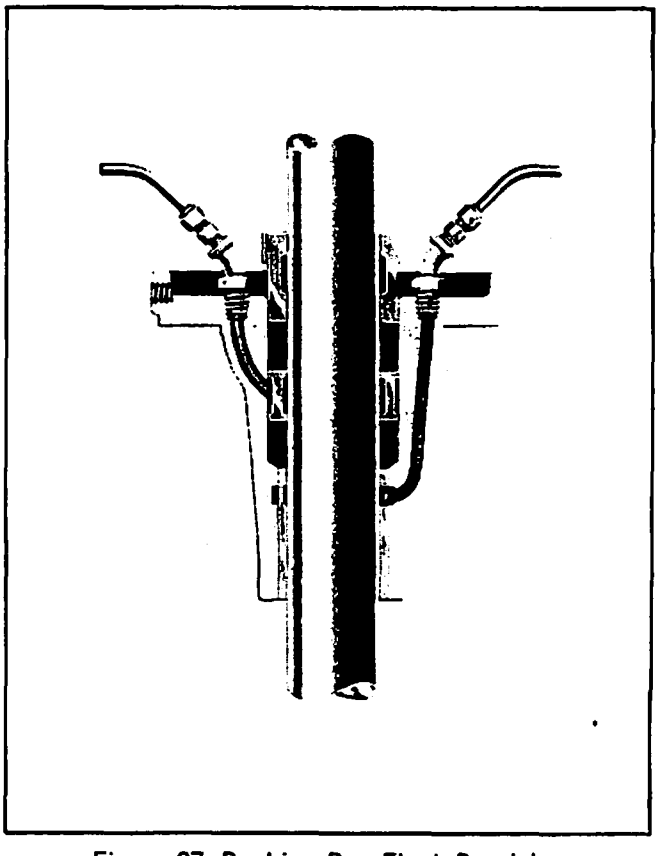

Figure 37. Packing Box Flush Provision

If you choose oil as your lubricant, you can reduce the recommended capacities or flow rates slightly. If you use this type of system to feed grease to your bearings, it is only necessary to keep the piping full and under adequate pressure at all times during operation. Here again, an alarm system may save you much trouble.

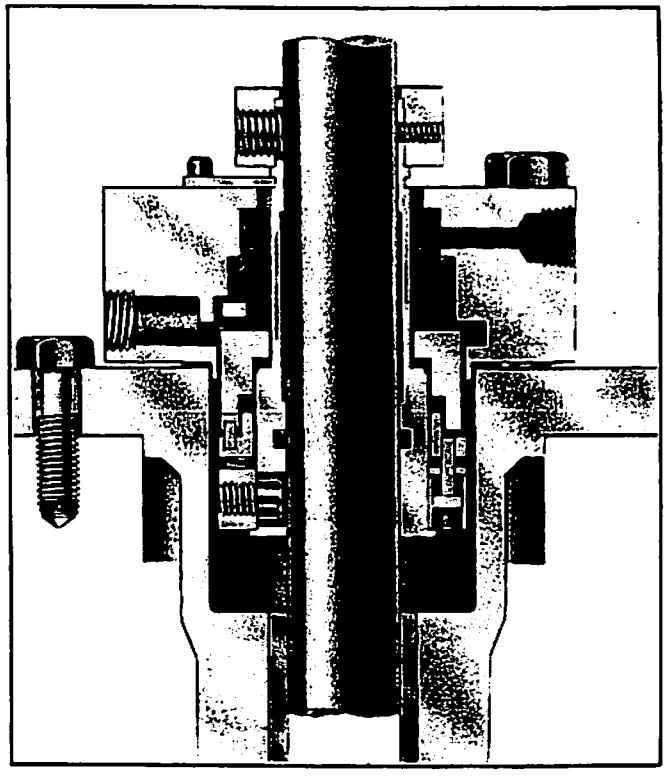

Figure 38. Typical Mechanical Seal - Ported for Flush System

SECTION 10

INSTALLING THE DRIVER

Uncrate the driver but leave it attached to the bottom skid on which it arrived. Move it to a convenient location beside the pump head, keeping it vertical at all times. Set down on firm and level footing.

When ready for installation, raise the driver off its skid to a comfortable working height, lifting it with the lugs provided on the frame.

WARNING

Stand beside the load as it hangs in the sling, never under it. Inspect and clean the mounting flange and register. If you find any burrs or nicks, set the driver on two beam supports and repair with a file.

WARNING

Don't work under the load while it's hanging from the hoist. Clean the top of the pump head and inspect it also, making any necessary repairs.

If your pump is equipped with a vertical hollowshaft driver, illustrated in Figure 39, continue right on here with subsection 10a. If you have a solid shaft driver as in Figure 40, skip this portion and be guided by subsection 10b.

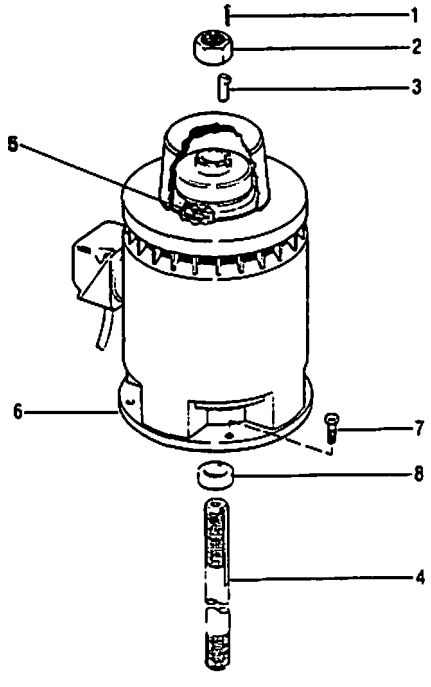

BOLD FACE PIECE NUMBERS INDICATE RECOMMENDED SPARE PARTS

Figure 39. Vertical Hollow Shaft Driver

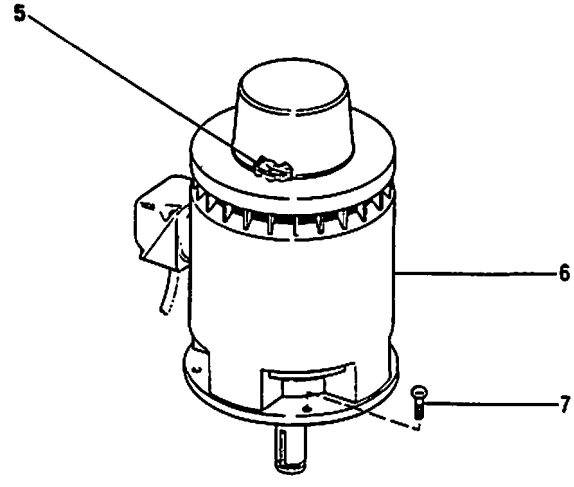

BOLD FACE PIECE NUMBERS INDICATE RECOMMENDED SPARE PARTS

Figure 40. Vertical Solid Shaft Driver

a. Vertical Hollow Shaft

Remove the driver cover capscrews and the canopy itself. See Figure 41. Remove the drive coupling and any other parts packed in the top for shipment. Place them in a clean safe place for later use. Cover all openings in the top to prevent anything from dropping into the driver. If this should happen, the object must be retrieved before proceeding.

Lower the driver slowly to the head until the register fit is engaged but with the weight still on the hoist. In the case of an electric motor, swing it around so the junction box is in the desired orientation. If you have a gear drive, as depicted in Figure 42, your positioning criterion is the horizontal input shaft. Align the mounting holes and start the attaching capscrews in by hand. Transfer the weight gently from hoist to head and secure the capscrews, tightening them uniformly.

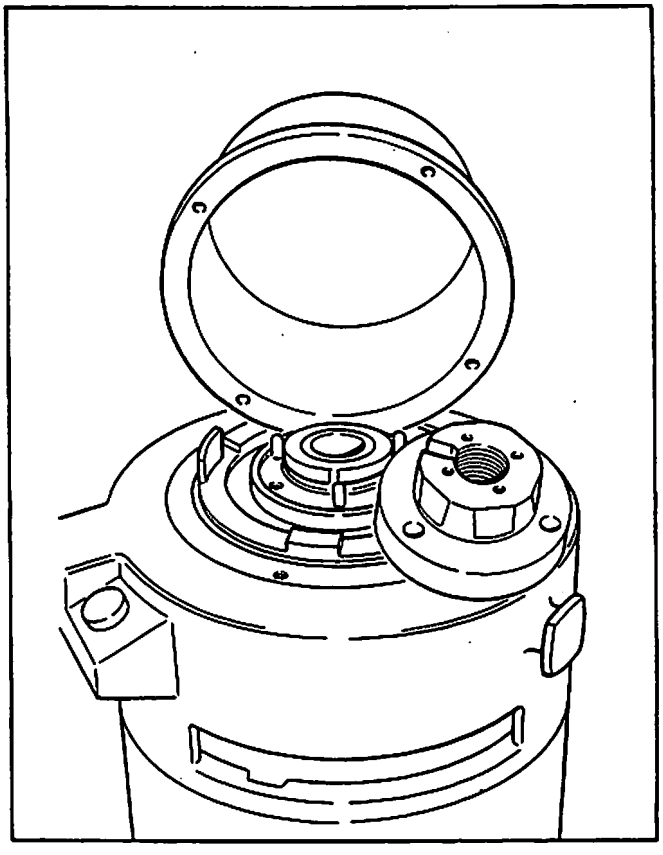

Figure 41. Removing Driver Canopy

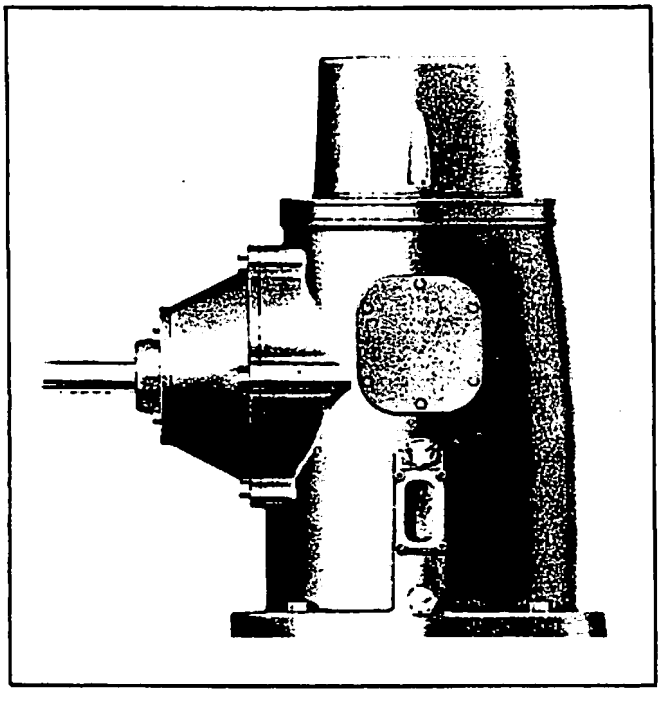

Figure 42. Right Angle Gear Drive

Please note that the lifting lugs on the driver are for handling the driver only. Never attempt to use these lugs to hoist the pump. The pump must be handled with its own lifting trunnions.

If you have a VHS electric motor, depicted in Figure 39, to deal with, open the main breaker or pump disconnect switch and make a temporary connection between the motor terminals and the leads from the starter panel. Since many electric motors are built as dual voltage machines, it is important that proper connections be made to suit the voltage of your power source. Therefore, you must check both power characteristic and motor rating for compatibility, then see the motor nameplate for correct wiring hookup.

While scanning the nameplate, determine the type of thrust bearing with which you've been furnished. If it's a spherical roller bearing, proceed with utmost caution as it must never be run at normal speed without an appreciable thrust load. For this reason, when establishing rotation as we're about to do, be very careful to just bump or tap the switch. Never close it fully until the pump is completely operational.

Otherwise, you may now energize the starter panel and buzz start the motor by switching it very quickly on and off, observing for direction of rotation and watching to see that it spins freely and is in apparent balance. Driver shaft must turn counterclockwise when viewed from the top. If rotation is clockwide, kill the power to the starter panel and interchange any two leads on three phase motors. With single phase machines, follow manufacturer's instructions.

After reconnection, energize the starter and again buzz start the motor. When you're sure you have counterclockwise rotation, mark the motor terminals and the leads from the starter box to match. De-energize the starter at the main breaker or pump disconnect switch and make the permanent power connections. Naturally, these connections must be made in accordance with all applicable electrical codes and regulations.

If your pump is equipped with a right angle gear drive, as shown in Figure 42, instead of an electric motor, the rotation check must wait until later when the pump is completely installed and connected to the prime mover. At that time, rotation is verified in a manner similar to that just described with allowances for the type of power equipment. Match up the rotation arrows on the gear and the prime mover to determine compatibility, at least as far as the nameplates are concerned.

Your headshaft was probably shipped to you in a separate box. Find it and clean it thoroughly throughout its length, threads, keyway, and end faces. Now slide it down through the driver hollow shaft without bumping or scraping, keyway end up. If you were furnished with a slinger ring, assemble it to the shaft as the shaft bottom end emerges from the bottom of the driver. With the coupling already assembled to the top lineshaft, join the headshaft to the lineshaft, snapping the two to a firm butt.

Looking down on the driver, check to see that the headshaft stands in the center of the hollowshaft and that the driver shaft rotates freely by hand. If the shaft stand to one side of the quill, rotate the shaft from below. If the top of the bar moves around the quill, you have a bent shaft or a bad coupling joint. If, however, the shaft remains in the same off center spot during rotation, the problem is with one of the stationary parts, perhaps the column or head assembly or, just as likely, the mounting structure. Whatever it is, it must be rectified before proceeding. If in doubt, call your Aurora representative.

When all is well, retrieve the drive coupling and other parts you set aside, together with the pump parts shown in Figure 39. Try the drive key, Item 3, in both headshaft and drive coupling keyways. They should produce a sliding fit. If necessary, dress the key until a free but not loose fit is obtained. Don't file the keyways. Slide the drive coupling over the headshaft, Item 4, into proper position onto its register, firmly seated perfectly flat without cocking. It should slide easily and smoothly without tendency to drag or hang up when lowered or rotated.

Insert the drive key, Item 3. Again it should be a free, but not loose, fit. If necessary dress the key but never the keyways. The top of the key must be below the adjusting nut seat when in place.

Thread the adjusting nut, Item 2, onto headshaft keeping in mind the left hand threads, and raise the shaft until all its weight is on the nut. This is the breakfree point. With a very slight lowering, the propeller hub is felt to drag on the bowl. Mark the breakfree point, adjusting nut to driver coupling.

Now turn the nut counterclockwise to raise the shaft, counting the turns, until the top of the propeller hub is felt to contact the bowl. Measure the distance the shaft moved out of the nut. This dimension should correspond to the endplay dimension you recorded in Section 8. Now back the nut off clockwise until the propeller is located halfway between the two extreme positions. Assemble the lockscrew, Item 1, Figure 43. The top of your driver now looks like Figure 44.

Replace the driver canopy and secure the capscrews. Keep it that way all the time you aren't actually working under the cover. Check your driver lubricant and follow manufacturer's directions. If your driver requires provision for coolant flow, take necessary measures as instructed. Don't run equipment until all these conditions have been satisfied. Leave the power circuit open to the starter panel while performing remaining work except when you require pump operation.

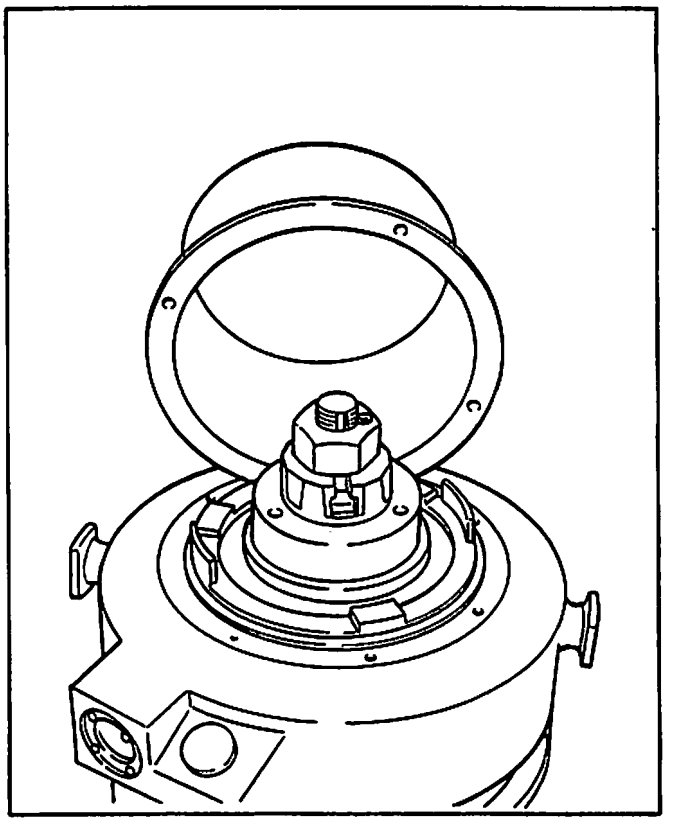

Figure 43. Driver Top

If you intend to grout the pump base, this is the time to do it. After the grout has cured sufficiently, secure the anchor bolt nuts.

b. Vertical Solid Shaft

Lower your vertical solid shaft driver to a firm and stable position atop a pair of beams or blocks placed on the discharge head to provide ample clearance between driver shaft and pump shaft. If you have an electric motor to deal with, secure it firmly against reactive torque with chain or cable restraints. Open the main breaker or pump disconnect switch and make a temporary connection between the motor terminals and the leads from the starter panel. Since many electric motors are built as dual voltage machines, it is important that proper connections be made to suit the voltage of your power source. Therefore you must check both power characteristic and motor rating for compatibility, then see the motor nameplate for correct wiring hookup.

While scanning the nameplate, determine the type of thrust bearing with which you've been furnished. If it's a spherical roller bearing, proceed with utmost caution as it must never be run at normal speed without an appreciable thrust load. For this reason, when establishing rotation as we're about to do, be very careful to just bump or tap the switch. Never close it fully until the pump is completely operational.

Otherwise you may now energize the starter panel and buzz start the motor by switching it very quickly on and off, observing for direction of rotation and watching to see that it spins freely and is in apparent balance. Driver shaft must turn counterclockwise when viewed from the top. If rotation is clockwise, kill the power to the starter panel and interchange any two leads on three phase motors. With single phase machines, follow manufacturer's instructions.

After reconnection, energize the starter and again buzz start the motor. When you're sure you have counterclockwise rotation, mark the motor terminals and the leads from the starter box to match. De-energize the starter at the main breaker or pump disconnect switch and remove the temporary power connections from the motor.

If your pump is equipped with a right angle gear drive, as shown in Figure 44, instead of an electric motor, the rotation check must wait until later when the pump is completely installed and connected to the prime mover. At that time, rotation is verified in a manner similar to that just described with allowances for the type of power equipment involved. Match up the rotation arrows on the gear and the prime mover to determine compatibility, at least as far as the nameplates are concerned.

While the driver is sitting on the blocks, examine the protruding drive shaft for any nicks or burrs. If necessary, repair very cautiously with a small file. Clean the shaft and oil it very lightly. Find the shaft coupling parts, Figure 45, and clean them all thoroughly.

Try the drive shaft key, Item 101, in both driver shaft and upper coupling half, Item 103, keyways. You should find a very close sliding fit. If necessary, dress the key but not the keyways until you obtain a free but not loose fit. Now try the thrust collar, Item 105, in the shaft groove. It too should be a very close fit and may be dressed to obtain this if necessary. Try the coupling half, Item 103, on the shaft.

When you have the proper fits and while the driver still sits on the blocks, insert the key, Item 101, in the shaft keyway and slide the coupling half, Item 103, up on the shaft flange face down. With the flange above the drive shaft ring groove, assemble both halves of the thrust collar, Item 105, in the groove and slide the coupling back down until it rests firmly on the thrust collar, retaining the collar halves in place in the coupling recess. Assemble and tighten setscrew, Item 104, securely.

If your coupling is furnished with a spacer spool, Item 106, assemble the spacer to the driver coupling half, Item 103. If parts are matchmarked, install them accordingly. Use only the nuts and bolts shipped with the pump as some couplings are balanced as assemblies. Tighten all flange bolts securely and uniformly throughout the coupling.

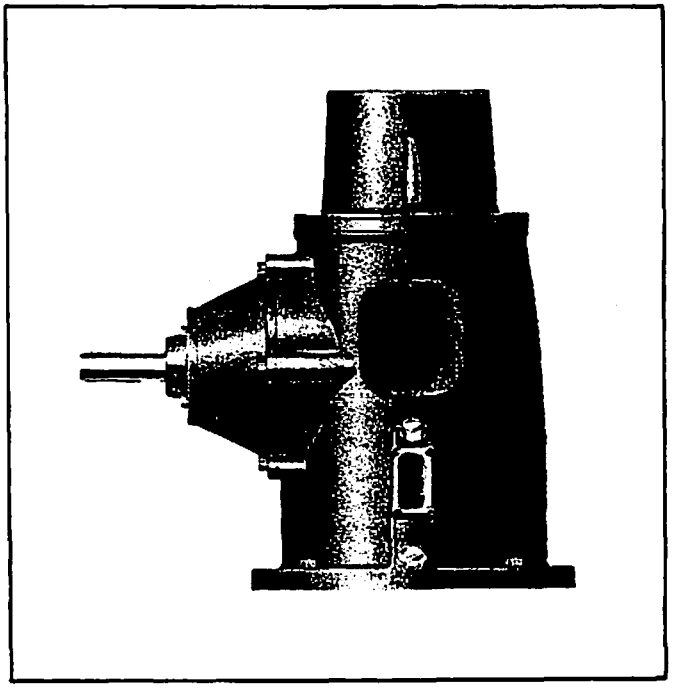

Figure 44. Right Angle Gear Drive

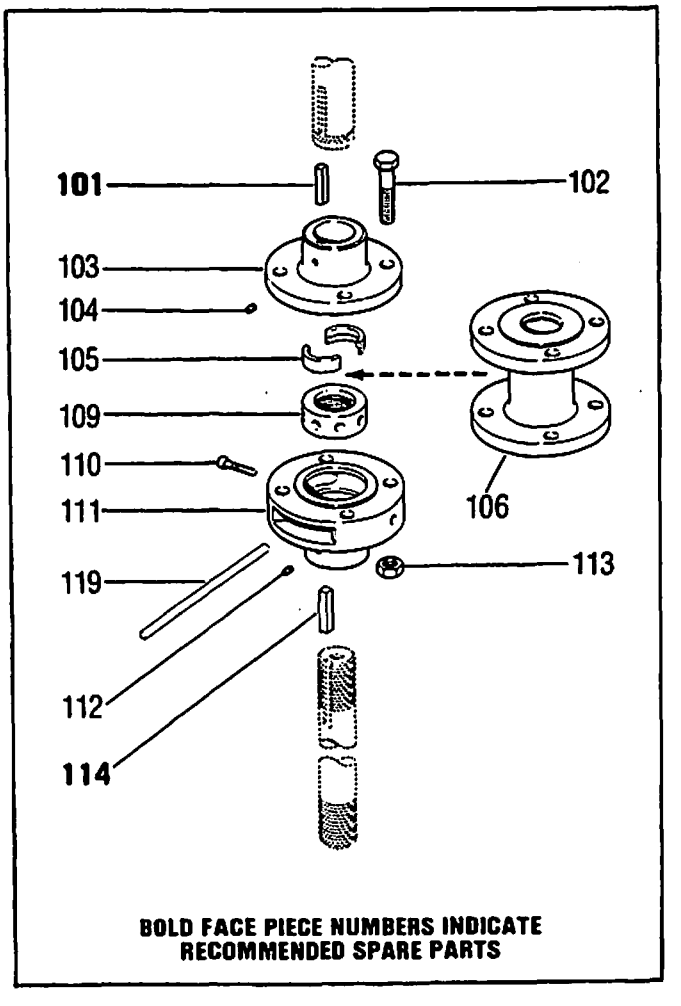

Figure 45. Flanged Adjustable Shaft Coupling

Inspect and clean pump shaft threads, painting lightly with good thread lubricant. If parts are stainless steel, be sure to use an approved anti-galling thread compound. After trying keys and parts as described above, insert key, Item 114, in pump shaft keyway and slip pump shaft coupling half, Item 111, well down over shaft, flange face up, leaving shaft threads projecting above coupling. Screw adjusting nut, Item 109, onto pump shaft with the rimmed end up, turning counterclockwise until pump shaft protrudes through threaded portion of nut by at least two threads. Remove the capscrews securing the packing box or tension nut flange.

Raise the driver just enough to remove the blocks, then lower it slowly to the head until the register fit is engaged but keeping the weight on the hoist. In the case of an electric motor, swing it around so the junction box is in the desired orientation. If you have a gear drive, Figure 44, your positioning criterion is the horizontal input shaft. Align the mounting holes and start the attaching capscrews in by hand. Transfer the weight gently from hoist to head and secure the capscrews, tightening them uniformly.

Please note the lifting lugs on the driver are for handling the driver only. Never attempt to use these lugs to hoist the pump. The pump must be handled with its own lifting trunnions.

With the pumpshaft all the way down, screw the adjusting nut 109 up by turning clockwise until its outer shoulder is approximately one tenth of an inch below the face of the driver coupling flange, Item 103, or spacer, Item 106, lower flange, if you have a spacer spool. Pull the pump coupling, Item 111, up and insert flange bolts, Item 108, through both flanges. Assemble nuts, Item 113, and run up by hand until they are snug, using a light machine oil on the bolt threads.

Check for shaft alignment at the outer edges of all the flanges. They must meet evenly both at the faces and at the outer circumferences. True alignment can be further verified by using dial indicators on both the driver and the pump shafts. If you cannot obtain alignment within 0.003 inches T. I .R., call your local Aurora representative.

When satisfactory alignment is achieved, put all bolts under uniform tension, using a torque wrench if available. Five hundred inch pounds should be sufficient torque; i.e., a fifty pound pull on a ten inch wrench or the equivalent. Make sure pump shaft key, Item 114, is flush with coupling hub and tighten setscrew, Item 112, securely to lock the key in place.

Move the adjusting nut, Item 109, very slightly if necessary to line up the nearest hole with the tapped hole in the outer circumference of the pump coupling flange. The nut may be rotated by inserting a bar, Item 119, through the slot in the coupling into one of the holes in the outer surface of the nut. Insert the socket head capscrew, Item 110, making certain it projects into a hole in the adjusting nut, then tighten securely. Now replace the packing box or tension nut flange capscrews. Tighten them uniformly and securely.

You may now make the permanent power connections to the electric motor, if that's what you have, checking of course to see that the power circuit to the starter panel is still open. Naturally these connections must be made in accordance with all applicable codes and regulations.

Check the driver lubricant and follow manufacturer's directions. If your driver requires provision for coolant flow, take the necessary measures as instructed. Don't attempt to run the equipment until all these considerations have been satisfied. Leave the power circuit open to the starter panel while performing remaining work except when the procedure requires pump operation.

If you intend to grout the pump base, this is the time to do it. After the grout has cured sufficiently, secure the anchor bolt nuts.

SECTION 11

OPTIONAL EQUIPMENT

Your Aurora Verti-Line propeller pump may be furnished with a variety of optional features to your specification. Some of the available options will be described in this manual. Please refer to those sections applicable to the construction of your unit, disregarding those that don't apply. Check your shipment for any drawings and/or special instructions that may have been included to cover items not described in this manual.

a. Flanged Non-Adjustable Shaft Coupling

In Section 10b, we described for you the installation of a Flanged Adjustable Shaft Coupling to join a solid shaft driver to the pump shaft. The Flanged Non-Adjustable Shaft Coupling is used almost exclusively to connect a hollowshaft electric motor with a hollow-shaft gear drive in a combination drive assembly.

In such an assembly, the gear is mounted on the pump head and carries a yoke on its top. The electric motor sits atop the yoke and thus we attain a combination electric and internal combustion drive, usually for insurance against loss of operation due to power failure. The Flanged Non-Adjustable Shaft Coupling is located in the gear drive yoke and joins the gear drive shaft to the motor drive shaft. See Figure 46.

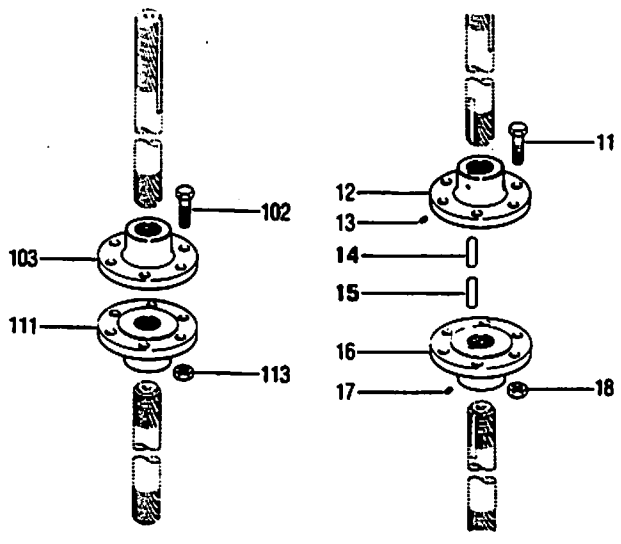

BOLD FACE PIECE NUMBERS INDICATE RECOMMENDED SPARE PARTS

Figure 46. Flanged Non-Adjustable Shaft Coupling

If your pump is equipped with a combination drive, assemble it complete up to and including the gear drive with its shaft and adjusting nut. The shaft will protrude upward out of the gear drive coupling with threads and a keyway exposed. Clean all the parts and paint the threads with lubricant. If the parts are stainless steel, use only an approved anti-galling compound. Thread the lower coupling half, Item 16, onto the gear shaft so that the end face of the shaft terminates about one thread below the flange face. Note: that's the flange face, not the register face. Line up the keyways and insert the key, Item 15. If necessary dress the key but not the keyways to a free but not loose fit. Tighten the setscrew, Item 17, securely.

In a similar manner, assemble the upper coupling half, Item 12, to the motor drive shaft, leaving the endface of the shaft about one thread below the flange face as before. Again, assemble the key, Item 14, and the setscrew, Item 13.

Now raise the electric motor and insert the motor shaft into the motor hollowshaft from the bottom with the shaft coupling flange facing down. Thread the adjusting nut on the top of the motor shaft to support the shaft weight while you lower the motor carefully into place atop the gear yoke. Orient the motor properly with respect to the junction box and secure the attaching capscrews.

Insert the bolts, Item 11, through the flanges and run the nuts, Item 18, up by hand until they're snug against the flange, using a light weight machine oil on the bolt threads. After all the nuts are drawn up and you're satisfied the flanges meet evenly, put all the bolts under uniform tension with a torque wrench if you have one.

Assembly of the motor shaft adjusting nut, the adjustment of the propeller, and other procedures may now be completed as described in Section 10a.

b. Below Base Discharge

Propeller pumps are so constructed that the discharge elbow may be either above or below the mounting base. Up to now in this manual, we've dealt primarily with an above base discharge configuration. We're including this subsection covering the below base arrangement, as shown in Figure 47, in case that's the way you ordered your pump.

In most cases, the discharge elbow, mounting base, and motor pedestal are all combined to make a one

piece section from which any additional column may be suspended. This is true regardless of whether the discharge is above or below base. Essentially, the installation procedures are identical, even when the elbow is in a separate piece of column farther down, well below the mounting plate. There are, however, several considerations worthy of your attention and we'll discuss them here.

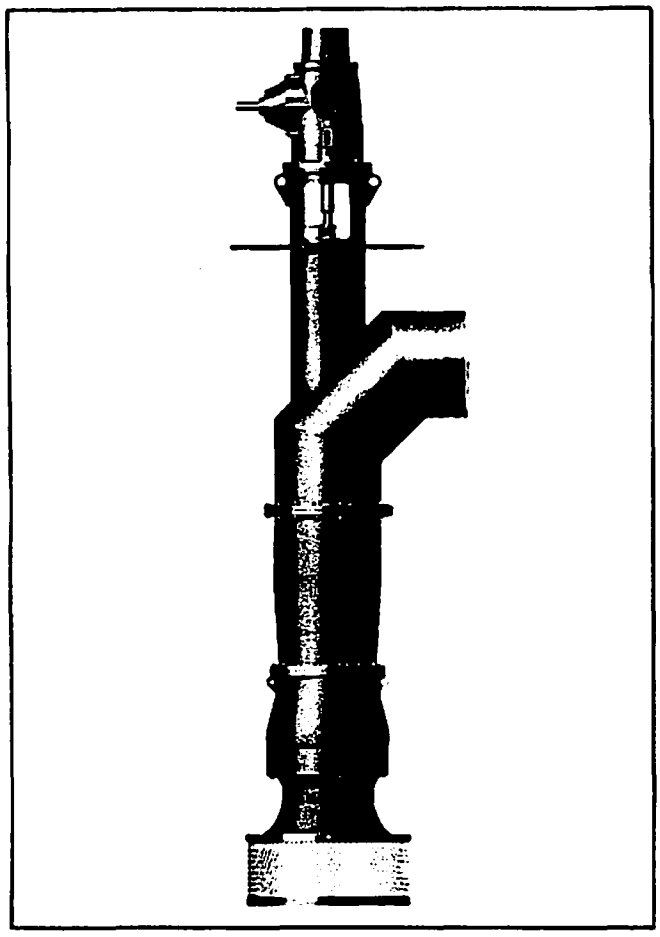

Figure 47. Below Base Discharge

Because your column pipe in effect deadends above your discharge, it's possible to entrap air in the upper cavity. Therefore we furnish all arrangements of this type with a port from which the air may be released. The port may be in the pedestal or in the column itself, depending on details of construction. We recommend you make provisions for either automatic or manual exhaust. Release should occur continuously during operation but at least at each startup.

Another point of difference: since the discharge is somewhat removed from the base and the tie down bolts, the moment imposed on the column by the discharge pressure can be appreciable, even in low head pumps like yours. When this becomes a factor, we must require restraints to oppose the horizontal thrust forces acting at the tee. Such forces must not be allowed to produce misalignment in the column.

As you can see in Figure 47, the elbow must pass through the foundation. Because of the large size of the discharge, this sometimes complicates the structural design of the mounting base.

c. Suction Umbrella

When indicated by submergence or inflow conditions, you may want to order your low lift pump equipped with a suction umbrella. These parts are of unusually large diameter, probably too large to pass through the hole in the foundation where you'll install the rest of the pump. The umbrella is usually, therefore, assembled after the pump is installed.

If clearances will permit its entry into the sump, you can use a single piece umbrella as illustrated in Figure 48. If the pump is large, the umbrella will be large and you may want to go to a two piece split design as shown in Figure 49. In either case, the parts are taken into the sump below the pump and installed from there, using the clips, Item 734, washers, Item 735, and nuts, Item 736, in connection with the studs on the umbrella itself. With the split arrangement, the two pieces, Items 730 and 731 must also be joined, using washers, Items 732 and nuts 733. For the big parts, it is best to block the items up under the suction bell so they don't have to be muscled up from the sump floor.

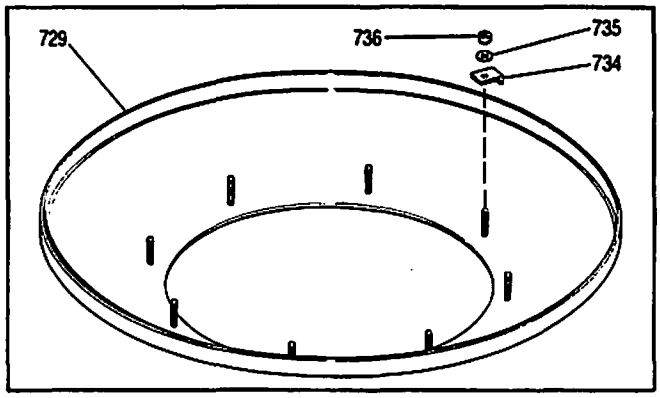

Figure 48. Suction Umbrella, Single Piece Design

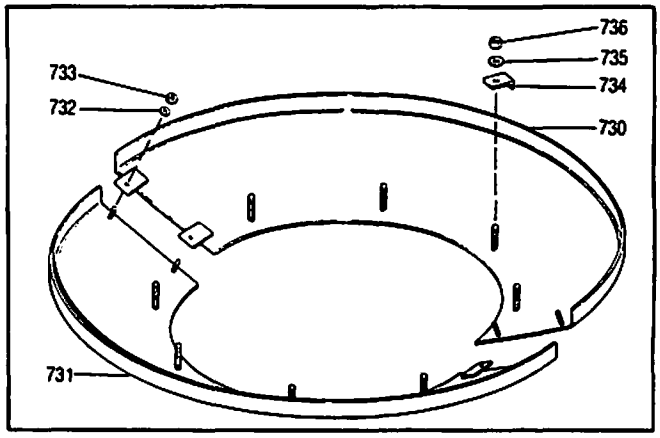

Figure 49. Suction Umbrella, Two Piece Split Design

SECTION 12

CONNECTING THE PIPING

You will be connecting your Aurora Verti-Line propeller pump to your piping of course, since the pump is there to energize your system. Whatever your particular piping system is, it must be independently supported. It must not be allowed to impose stress on the pump due to weight, thermal expansion, misalignment, or any other condition.

When bolting system flanges to the pump flanges, determine that the flanges fit face to face and hole to hole before inserting bolts. Don't draw the flanges together with the flange bolts.

One way you can avoid stressing the pump parts with the system piping is to incorporate couplings designed to absorb some misalignment and vibration. Dresser type, as shown in Figure 50 and, to a lesser extent, victaulic type couplings, as shown in Figure 51, will give you a little more tolerance in fashioning your piping grids. Keep in mind, however, that there is a thrust load across such couplings that may require restraining ties. You may have some small pipes or tubes to accommodate if you are supplying coolant to the driver, for example. In such cases, it is well to protect the small lines from vibration by using hose connections at strategic locations.

If it is your intent to grout the pump base in place and you haven't already done it, this is the time to do so. After the grout has cured sufficiently, secure the anchor bolt nuts firmly and proceed with Section 13.

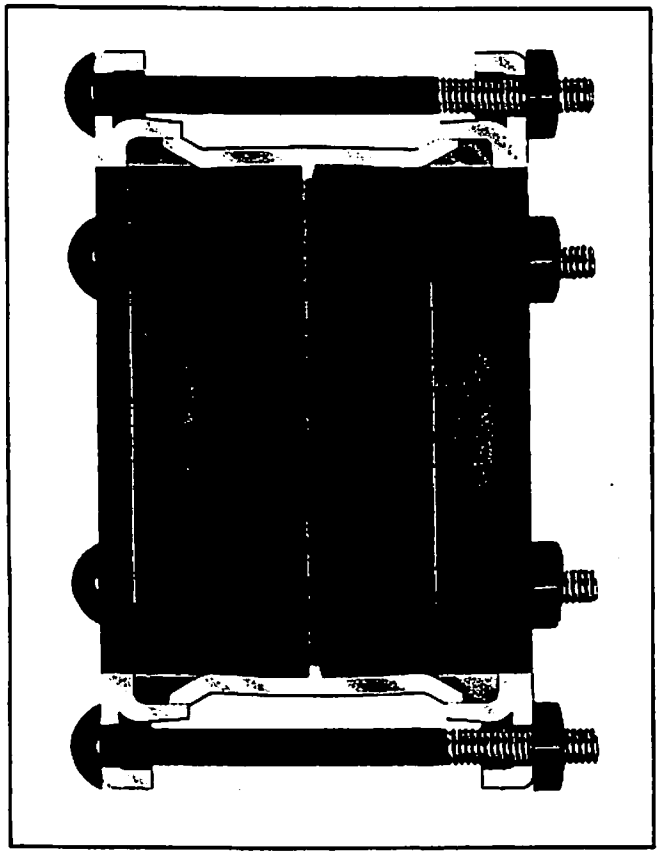

Figure 50. Dresser Type Coupling

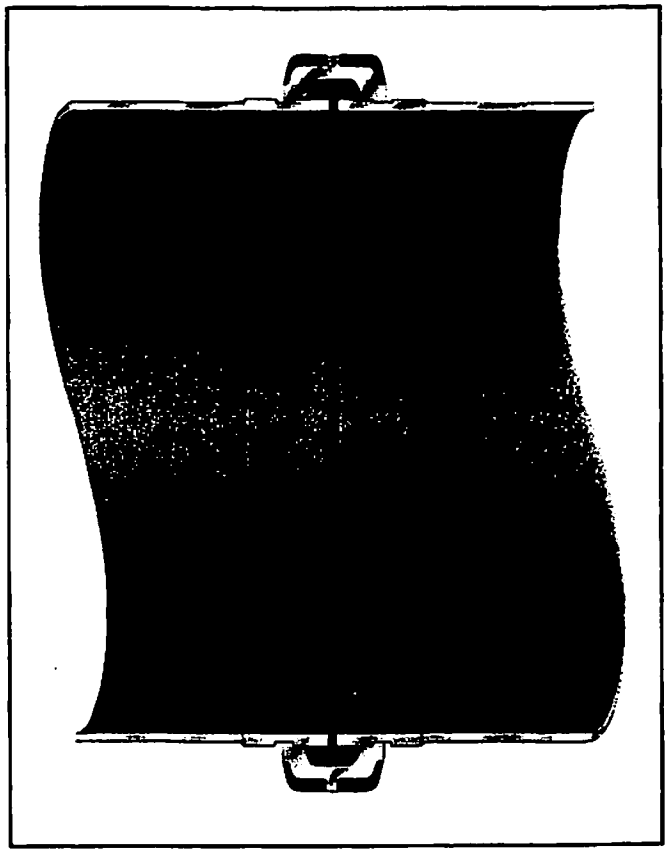

Figure 51. Victaulic Type Coupling

SECTION 13

STARTING THE PUMP

Before starting a new pump for the first time, you must establish the status of the following items:

* Driver lubrication levels must be adequate.

* Driver cooling system, if used, must be operative.

* Driver wiring has been carefully checked.

* Driver connnection to power source is complete and adequately guarded.

* Pump lubrication system is operative with adequate levels.

* Pump has been through a proper prelubrication cycle.

* All accessible connections are tight.

* Pump is properly adjusted according to Section 10.

* Pump rotation is counterclockwise when viewed from top.

* Suction bell is properly submerged.

* System is in condition to deliver and accept full flow.

* All covers and guards are in place.

* All personnel are clear of equipment.

When all these conditions are satisfied, start the pump and observe the operation closely. If there is excessive vibration, unusual or excessive noise, or if the driver draws noticeably more power than expected, stop the pump. Research the cause and correct the problem before attempting a restart.

If your pump is tube enclosed and leaks at the tension nut, check the locknut and packing ring at the top. If this isn't the cause, it may be necessary to apply more tension on the tube. Stop the pump and move the tension nut flange around to the next capscrew hole, working through the access openings in the discharge head.

With an open lineshaft pump, give your attention to the packing box. Let the pump run for ten to fifteen minutes while you allow the packing gland, Item 224 in Figure 30, to leak at least one hundred drops per minute. If the leakage rate slows during this period, loosen the gland nuts, Item 222, to maintain constant flow. Gland temperature should level off and then drop slightly toward the end of the run. You may then draw up the nuts about one sixth of a turn every five minutes until leakage is minimized. If, during this procedure, the gland heats up so that it will vaporize water, back off the nuts and repeat the run in process as described until the temperature stays down after the gland is finally adjusted.

During the first four hours of operation, you may find it necessary to tighten the gland gradually as the packing rings, Items 225 and 227, are broken in and formed to fill the chamber. You must always allow a small trickle to flow through the top of the gland. During this time, check frequently to see that the box is not overheating. Should this occur, slacking off on the gland nuts, Item 222, may be all you need do. If excess heat continues, inspect the bypass line from the drain port and make sure there is substantial flow through it.

The grease fitting, Item 237, channels into the throttle bearing. Only a very small amount of standard water pump grease should be injected for startups only, otherwise not at all. Too much grease can actually interfere with heat transfer in the journal area, producing excessive temperature in the box. It's better to use no grease than too much.

As you repeatedly tighten the gland over long periods of operation, the packing rings will be compressed in the chamber, lowering the gland into the box. Additional rings are often added as required to compensate but you must never add more than two above the lantern ring, Item 226, since you will block the drain port. After adding any packing, probe the drain port with a wire to see that it has not become plugged.

When you eventually find it necessary to repack the box, you must first remove the remains of the old packing with packing hooks, cleaning the chamber thoroughly. The lantern cage, Item 226, is provided with #10-24 tapped holes in the face so that you can lift it out using appropriate machine screws or similar means. You'll find the gland, Item 224, easy to remove because of its split design. You can secure the lantern ring up out of the way during repacking by tying a couple turns of string around the shaft.

At the time of repacking, always check the shaft alignment and surface finish. The finish should be smooth without burrs, grooves, or scratches. Avoid shaft runouts over 0.005 inch. You may use butt or diagonal cut packing, but we recommend the latter. We also recommend you use die cut rings for repacking, of the same size and material as the original. If you cut and fit

the rings at the jobsite, be sure to cut them so the ends just barely meet when formed around the shaft. The ring joints should be located 90° to 180° from the cut in rings immediately above and below.

If your pump has been repaired or if it has been shut down for several days or more, follow the same procedures for restarting as above. Refer to our Recommendations for Storage located on the inside front cover of this publication.

If you have any questions, Aurora Pump will be glad to help you. We wish you the best of service from your pumping equipment.

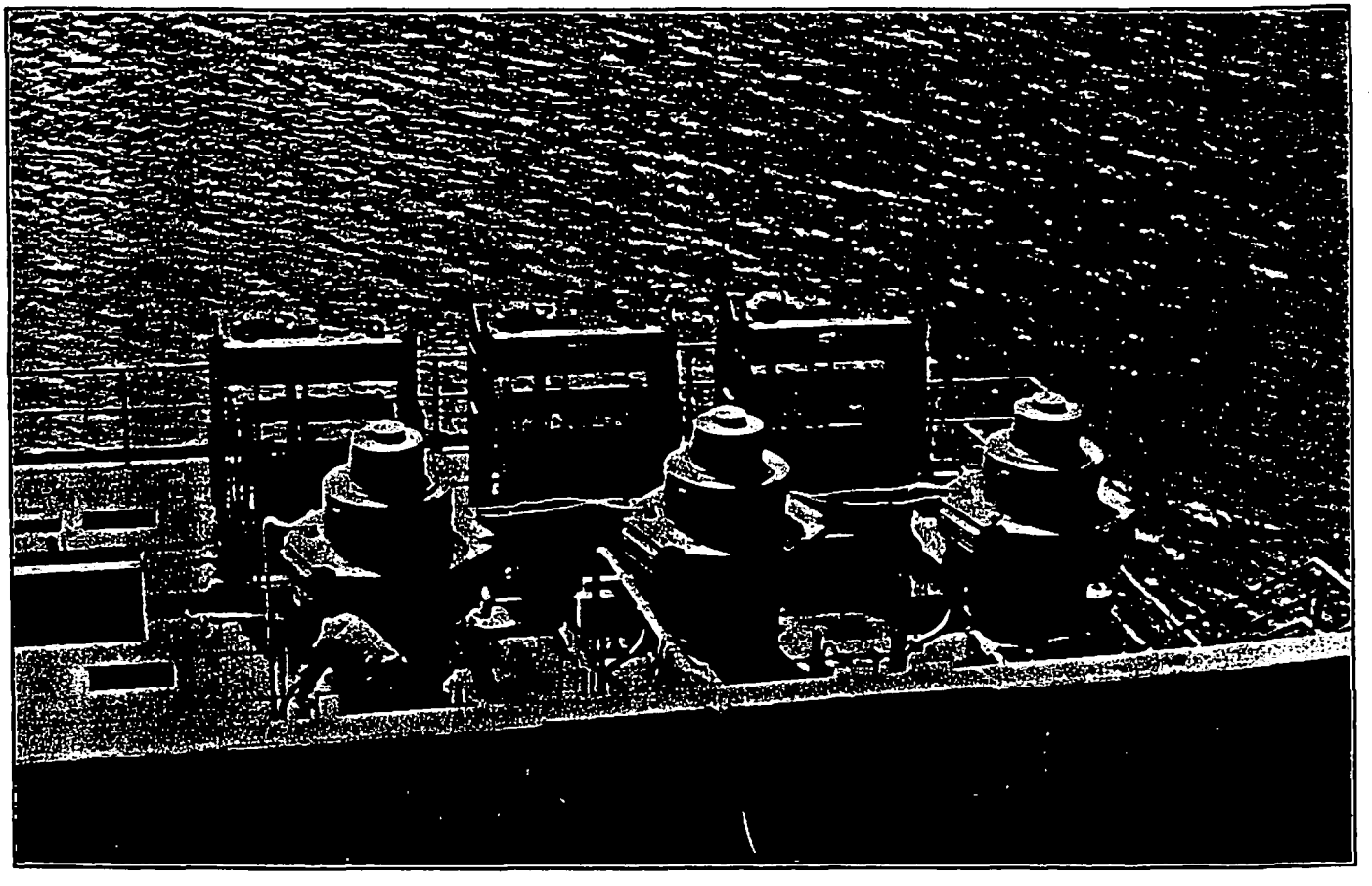

Figure 52. Typical Installation

SECTION 14

PRECAUTIONARY INFORMATION

a. Responsibilities

There are certain areas in which Aurora Pump has no control and can therefore accept no liability. For instance, unless supervised by an Aurora Pump service engineer, responsibility for installation, start-up and maintenance rightfully belongs to the Owner and his authorized agents. Similarly, the following shall be the Owner's obligation and responsibility:

Suitability of foundation or mounting structure

Suitability of power characteristics

Security and safety of jobsite and site conditions

Placement and maintenance of all appropriate guards and safety devices

Suitability and performance of system to which pump is applied

Aurora Pump cannot be responsible for damages, lost time, or injury resulting from failure to comply with these instructions. Aurora Pumps obligations do not cover damage to the pump due to abrasives, gas, or corrosives in the water. They do not cover harm due to starting pump in a reverse rotation mode; neither do they cover performance when parts not furnished by Aurora are used in the pump.

If you have any question, please call your Aurora representative.

b. General Cautionary Notes

Your Aurora Verti-Line pump is an engineered assembly of precision parts and must be treated accordingly even though sometimes the components are heavy and awkward to manipulate. Also, because they may be heavy, they must never be handled carelessly. Normal rules of safety and approved methods of practice as associated with the erection of heavy equipment must be observed in any activity related to your pump.

In addition to general acceptable industrial practice, we emphasize the following twenty precautions:

Don't work on pumps, wiring, or any pump or system components without opening energizing circuits such as at main breaker or pump disconnect switch. This will prevent damage or injury due to "surprise" starts actuated by automatic control systems. It will also help prevent other possibilities of injury.

Don't work under a suspended load. Rest the load on positive supports when it's necessary to be underneath.

Don't run a spherical roller thrust bearing except under full thrust load. It can fly apart and cause damage to equipment and injury to personnel.

Don't forget that this equipment contains rotating parts. Use CAUTION when working near such parts to avoid injury. Always replace all guards, covers, shields, and other safety devices before startup.

Don't permit smoking in the vicinity of petroleum base solvents. Store solvents in approved containers.

Don't use lubricants that can contaminate your system and cause damage or injury.

Don't start pump while it is still rotating in reverse direction after having shut down. It is advisable to install a time delay relay on electric drives to prevent this. Non-reverse protection in the driver could also be a solution.

Don't put heavier than recommended heaters in your starter if the pump load begins to trip those furnished originally. These are protective devices. Call your Aurora representative for assistance.

Don't add oil to driver while running; check levels only when idle. Don't add grease to grease lubricated driver without removing the relief plug.

Don't drop parts into pump during installation or disassembly. Don't drop parts into driver when canopy is off and top is open. Parts must be recovered immediately.

Don't run pump backward. Clockwise operation (looking down at top of pump) under power can unscrew threaded shaft joints. Power requirements of some designs increase when driven backward and can thus create undesirable overloads. In certain areas of the country prone to phase reversal problems, consider phase protection in your power circuit. Note: these problems do not apply to pumps coasting backward due to return flow from system; overspeed is the circumstance to question then.

Don't allow oil, grease, or thread lubricant to contact rubber bearings or tube stabilizers.

Don't pump anything but water unless your pump has been designed for it

Don't start the pump without proper adjustment.

Don't start a pump in which the shaft appears frozen or locked up. Free the shaft and rotate by hand first.

Don't pull system piping to pump flanges with bolts or capscrews. Install pipelines so that fasteners are used to prevent leakage only.

Don't hang the weight of suction or discharge lines and fittings on pump. Support pipe runs with blocking or concrete saddles according to best piping practice. Use dresser type couplings with thrust ties if necessary whenever possible to eliminate piping strains imposed on pump.

Don't throttle or obstruct the suction of any pump.

Don't tighten shaft packing except in increments. For example, take gland nuts up part of a turn and let pump run five or ten minutes before tightening further. If leakage water is too hot to put on your hand, back gland nuts off a little until water cools, then tighten again. Gland nuts must be adjusted evenly so as to prevent gland from cocking and forcing against shaft.

Don't change pump speed without first checking effect on power, internal pressure, and other conditions. Don't forget that your pump is guaranteed for design conditions only as purchased.

And let us add one more DON'T for the benefit of your pump and your peace of mind:

Don't hesitate to call your Aurora representative or the Aurora factory when you need help or have a question.

c. Operation at Shutoff Head

In the usual application of Aurora Verti-Line propeller pumps, no harm will result from operation at condition of static flow heads as long as you've prepared for that contingency. The following points should be checked and resolved before putting your equipment into operation at or near shutoff heads.

Thrust bearing must be adequate.

If prolonged operation at no flow is contemplated, the problem of heat dissipation may become acute since most of the shutoff horsepower is converted to heat in the available liquid. This can be reduced with an adequate recirculation system.

Propellers usually have critical power characteristics at low flow rates. Shutoff horsepower requirements should be reviewed for possible driver overload. If your pump will start against a closed valve, you'd better review and compare the speed torque curves of your pump and your driver for complete compatibility.

You must remember that open lineshaft units depend upon pumped liquid for lubrication. Fluid temperatures, if raised excessively due to lack of flow, may impair lubrication efficiency even to the point of destroying the pump.

To summarize, normal designs will easily accommodate most of the considerations listed above. However, to obtain the best possible application, you must notify the factory at the time of purchase if operation at static flow heads will be a possibility. This precaution must be observed to validate any warranty.

d. Maintenance Hints

For pump oil lubrication, use a light turbine oil equivalent to Standard Oil O. C. Turbine Oil #32 or a good grade of mineral oil with proper additives having a viscosity equal to SAE #10. Always be sure your lubrication system has plenty of oil and is operating any time the pump is running.

Remove the old oil from your driver at least once a year or according to the driver manufacturer's instructions. Flush with kerosene and refill. Follow manufacturer's directions carefully as to method and type of lubricant. Replace self lubricated driver ball bearings in about five years. It is generally less expensive to replace these before they fail.

Replace all shaft packing on open lineshaft pumps after maintenance has required the addition of no more than two rings. Always let packing box leak slightly at top of gland to protect the shaft and add life to your packing.

Be aware of changing conditions in your system. Any change from the original condition or any variation in the system can create an undesirable reaction in the pump as the energizer of the system. If your system head has increased, for example, check your performance curve, your thrust bearing capacity, and other details for the new conditions.

We recommend you consult your Aurora representative before attempting to remove or repair your pump. If it becomes necessary to work on your equipment, be sure to review all instructions for operation and maintenance. You may want to consider contracting for the services of a trained Aurora service engineer to guide you.

NOTES

NOTES

All orders shall be made out to Aurora Pump at North Aurora, Illinois, and shall be subject to acceptance by us at North Aurora.

1. CONSTRUCTION AND LEGAL EFFECT. Our sale to you will be solely upon the terms and conditions set forth herein. They supersede and reject any conflicting terms and conditions of yours, any statement in yours to the contrary notwithstanding. Exceptions to any of our terms and conditions must be contained in a written or typed (not printed) statement received from you; we shall not be deemed to have waived any of our terms and conditions or to have assented to any modification or alteration of such terms and conditions unless such waiver or assent is in writing and signed by an authorized officer. No representation of any kind has been made by us except as set forth herein; this agreement conclusively supersedes all prior writings and negotiations with respect thereto and we will furnish only the quantities and items specifically listed on the face hereof; we assume no responsibility for furnishing other equipment or material shown in any plans and/or specifications for a project to which the goods ordered herein pertain. Any action for breach of contract must be commenced within one year after the cause of action has accrued. Our published or quoted prices, discounts, terms and conditions are subject to change without notice.

2. PRICES. Unless otherwise noted on the face hereof, prices are net F.O.B. our producing factory, and include standard catalogue literature only. Service time of a factory-trained service man is not included and may be charged extra. The amount of any applicable present or future tax or other government charge upon the production, sale, shipment or use of goods ordered or sold will be added to billing unless you provide us with an appropriate exemption certificate. We may adjust prices to our prices in effect at time of shipment. Purchased equipment such as motors, controls, gasoline engines, etc., will be invoiced at prices in effect at time of shipment in accordance with pricing policy of manufacturer.

3. DEFECTIVE EQUIPMENT. Providing Purchaser notifies us promptly, if within one year from date of shipment equipment or parts manufactured by us fail to function properly under normal, proper and rated use and service because of defects in material or workmanship demonstrated to our satisfaction to have existed at the time of delivery, the Company reserving the right to either inspect them in your hands or request their return to us will at our option repair or replace at our expense F.O.B. our producing factory, or give you proper credit for such equipment or parts determined by us to be defective, if returned transportation prepaid by Purchaser. The foregoing shall not apply to equipment that shall have been altered or repaired after shipment to you by anyone except our authorized employees, and the Company will not be liable in any event for alterations or repair except those made with its written consent. Purchaser shall be solely responsible for determining suitability for use and the Company shall in no event be liable in this respect. The equipment or parts manufactured by others but furnished by us will be repaired or replaced only to the extent of the original manufacturer's guarantee. Our obligations and liabilities hereunder shall not be enforceable until such equipment has been fully paid for. Purchaser agrees that if the products sold hereunder are resold by purchaser, he will include in the contract for resale, provisions which limit recoveries against us in accordance with this section. In case of our failure to fulfill any performance representation, it is agreed that we may at our option remove and reclaim the equipment covered by this agreement at our own expense and discharge all liability by repayment to the purchaser of all sums received on account of the purchase price. (THE FOREGOING OBLIGATIONS ARE IN LIEU OF ALL OTHER OBLIGATIONS AND LIABILITIES INCLUDING NEGLIGENCE AND ALL WARRANTIES, OF MERCHANTABILITY OR OTHERWISE, EXPRESS OR IMPLIED BY FACT OR BY LAW, AND STATE OUR ENTIRE AND EXCLUSIVE LIABILITY AND BUYER'S EXCLUSIVE REMEDY FOR ANY CLAIM OF DAMAGES IN CONNECTION WITH THE SALE OR FURNISHING OF GOODS OR PARTS, THEIR DESIGN, SUITABILITY FOR USE, INSTALLATION OR OPERATION.) WE WILL IN NO EVENT BE LIABLE FOR ANY DIRECT, INDIRECT, SPECIAL OR CONSEQUENTIAL DAMAGES OR DELAY RESULTING FROM ANY DEFECT WHATSOEVER, AND OUR LIABILITY UNDER NO CIRCUMSTANCES WILL EXCEED THE CONTRACT PRICE FOR THE GOODS FOR WHICH LIABILITY IS CLAIMED.

4. DELIVERY. Delivery, shipment and installation dates are estimated dates only, and unless otherwise specified, are figured from date of receipt of complete technical data and approved drawings as such may be necessary. In estimating such dates, no allowance has been made, nor shall we be liable directly or indirectly for, delays of carriers or delays from labor difficulties, shortages, strikes or stoppages of any sort, fires, accidents, failure or delay in obtaining materials or manufacturing facilities, acts of government affecting us directly or indirectly, bad weather, or any causes beyond our control or causes designated Acts of God or force majeure by any court of law, and the estimated delivery date shall be extended accordingly. We will not be liable for any damages or penalties whatsoever, whether direct, indirect, special or consequential, resulting from our failure to perform or delay in performing unless otherwise agreed in writing by an authorized officer.

5. OPERATING CONDITIONS AND ACCEPTANCE. Recommendations and quotations are made upon the basis of operating conditions specified by the Purchaser. If actual conditions are different than those specified and performance of the equipment is adversely affected thereby, Purchaser will be responsible for the cost of all changes in the equipment required to accommodate such conditions, and we reserve the right to cancel this order and Purchaser shall reimburse us for all costs and expenses incurred in, and reasonable profit for, performance hereunder. We reserve the right to refuse any order based upon a quotation containing an error. The provisions in any specification or chart are descriptive only and are not warranties or representations; we will certify to a rated capacity in any particular product upon request. Capacity, head and efficiency certifications are based on shop tests and when handling clear, fresh water at a temperature of not over 85°F. Certifications are at this specified rating only and do not cover sustained performance over any period of time nor under conditions varying from these .

6. SHIPPING. Unless you specify otherwise in writing, (a) goods will be boxed or crated as we may deem proper for protection against normal handling, and extra charge will be made for preservation, waterproofing, export boxing and similar added protection of goods; (b) routing and manner of shipment will be at our discretion, and may be insured at your expense, value to be stated at order price. On all shipments F.O.B. our producing factory, delivery of goods to the initial carrier will constitute delivery to you and all goods will be shipped at your risk. A claim for loss or damage in transit must be entered with the carrier and prosecuted by you. Acceptance of material from a common carrier constitutes a waiver of any claims against us for delay or damage or loss.

7. PATENT INFRINGEMENT. We will not be liable for any claim of infringement unless due to infringement by goods manufactured by us in the form in which we supply such goods to you and without regard to their use by you. If you notify us promptly of any such claim of infringement and, if we so request, authorize us to defend or settle any suit or controversy involving such claim, we will indemnify you against the reasonable expenses of any such suit and will satisfy any judgment or settlement in which we acquiesce, but only to an amount not exceeding the price paid to us for the allegedly infringing goods. If an injunction is issued against the further use of allegedly infringing goods we shall have the option of procuring for you the right to use the goods, or replacing them with non-infringing goods, or modifying them so that they become non-infringing, or of removing them and refunding the purchase price. The foregoing expresses our entire and exclusive warranty and liability as to patents, and we will not be liable for any damages whatsoever, suffered by reason of any infringement claimed, except as provided herein. You will hold us harmless and indemnified against any and all claims, demands, liabilities, damages, costs and expenses resulting from or connected with any claim of patent infringement arising out of the manufacture by us of goods in accordance with a design or specifications which you furnish us.

8. CANCELLATION AND RETURNED EQUIPMENT. Orders may be cancelled only with our written consent and upon payment of reasonable and proper cancellation charges. Goods may be returned only when specifically authorized and you will be charged for placing returned goods in saleable condition, any sales expenses then incurred by us, plus a restocking charge and any outgoing and incoming transportation costs which we pay.

9. CREDIT AND PAYMENT. Payment for products shall be 30 days net. Pro-rata payments shall become due with partial shipments. A late charge of 1½ percent per month or the maximum permitted by law, whichever is less, will be imposed on all pastdue invoices. We reserve the right at any time to alter, suspend, credit, or to change credit terms provided herein, when in its sole opinion your financial condition so warrants. In such a case, in addition to any other remedies herein or by law provided, cash payment or satisfactory security from you may be required by us before shipment; or, the due date of payment by you under this contract may be accelerated by us. Failure to pay invoices at maturity date at our election makes all subsequent invoices immediately due and payable irrespective of terms, and we may withhold all subsequent deliveries until the full account is settled, and we may terminate this agreement. Acceptance by us of less than full payment shall not be a waiver of any of our rights. You represent by sending each purchase order to us that you are not insolvent as that term is defined in applicable state or federal statutes. In the event you become insolvent before delivery of any products purchased hereunder, you will notify us in writing. A failure to notify us of insolvency at the time of delivery shall be construed as a reaffirmation of your solvency at that time. Irrespective of whether the products purchased hereunder are delivered directly to you, or to a customer of yours, and irrespective of the size of the shipment, we shall have the right to stop delivery of the goods by a bailee if you become insolvent, repudiate, or fail to make a payment due before delivery, or if for any other reason we have a right to withhold or reclaim goods under the applicable state and federal statutes. Where you are responsible for any delay in shipment the date of completion of goods may be treated by us as the date of shipment for purposes of payment. Completed goods shall be held at your cost and risk and we shall have the right to bill you for reasonable storage and insurance expenses.

10. SPECIAL JIGS, FIXTURES AND PATTERNS. Any jigs, fixtures, patterns and like items which may be included in an order will remain our property without credit to you. We will assume the maintenance and replacement expenses of such items, but shall have the right to discard and scrap them after they have been inactive for one year without credit to you.

11. INSPECTION. Inspection of goods in our plant by you or your representative will be permitted insofar as this does not unduly interfere with our production workflow, provided that complete details of the inspection you desire are submitted to us in writing in advance.

12. RECORDS, AUDITS AND PROPRIETARY DATA. Unless otherwise specifically agreed in writing signed by an authorized officer, neither you nor any representative of yours, nor any other person, shall have any right to examine or audit our cost accounts, books or records of any kind or on any matter, or be entitled to, or have control over, any engineering or production prints, drawings or technical data which we, in our sole discretion, may consider in whole or in part proprietary to ourselves.

Exhibit I

Pumps
Central Pump Station
(3 - 60 HP, 1 - 75 HP Elevated Lift Pump)
West Pump Station
(1 - 15 HP Elevated Lift Pump)

PRIME PUMP

PRIME PUMP CORPORATION
P.O. Box 8526 • Berkeley, CA 94707

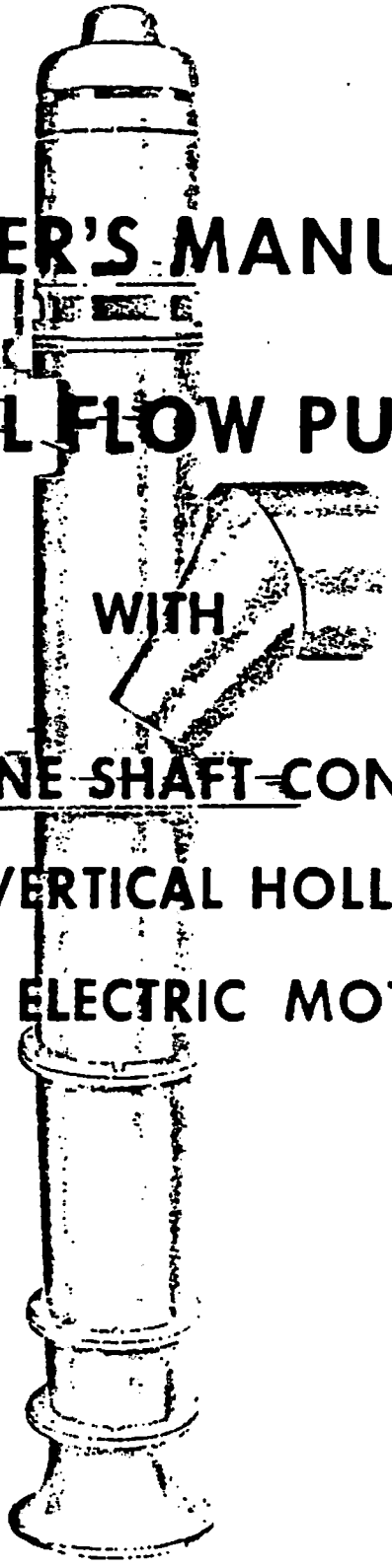

OWNER'S MANUAL

AXIAL FLOW PUMP

WITH

ENCLOSED LINE SHAFT CONSTRUCTION AND VERTICAL HOLLOW SHAFT ELECTRIC MOTOR

PRIME PUMP

PRIME PUMP, INC. (415) 849-9779
P.O. Box [illegible] • [illegible] CA [illegible] • (415) [illegible] • FAX (415) [illegible]

LIMITED WARRANTY

THIS LIMITED WARRANTY is extended only to the original consumer-purchaser of products manufactured by PRIME PUMP INC.

PRIME PUMP INC. warrants the products it manufactures to be free of defects in material and workmanship. The warranty extends only to the original consumer-purchaser and commences on the date of sale to said consumer-purchaser and remains in effect for a period of twelve (12) months.

Delivery schedules are not covered by any warranty terms, and all dates given are approximate and subject to change without notice.

THIS WARRANTY DOES NOT COVER:

1. Adjustment or replacement of maintenance items, such as, but not limited to: shaft packing and bearing lubrication.
2. Any work performed to correct malfunctions caused by misuse, negligence or disregard of PRIME PUMP INC.'s written instructions.
3. Additional service work performed above that which is required to satisfy warranty requirements.
4. Transportation charges, haul-out, travel time, loss of use, or other consequential charge or damage.
5. Any damage caused by sand or abrasive materials, chemical deposits, corrosion, acts of God, or other outside forces beyond the control of PRIME PUMP INC.
6. Electric motors, air and liquid cooled engines and other items not of our manufacture, condensers and electrical cable furnished with submersible pumps. Warranty on these items, if any, is the warranty of the manufacturer of such item or items.
7. Repairs or replacement made without authorization from PRIME PUMP INC. or repairs made at other than a service facility designated by PRIME PUMP INC.

In the event of any breach of this warranty, the consumer-purchaser must deliver or ship the defective unit or parts, freight prepaid, to PRIME PUMP INC. and PRIME PUMP INC. will replace or repair any such units or parts where the defect results from a breach of this warranty without charge provided said defect occurred within the warranty period. Said replacement or repair will be made at PRIME PUMP INC. PRIME PUMP INC. shall not be responsible for the cost of removal of the units or parts and the shipment of said units or parts to or from PRIME PUMP INC. plant.

PRIME PUMP INC. warranty obligation with regard to equipment not of its own manufacture is limited to the warranty actually extended to PRIME PUMP INC. by its suppliers.

Should a failure of such motor or engine occur during the warranty period, the consumer-purchaser or dealer must notify PRIME PUMP INC. plant and follow the instructions given.
THIS WARRANTY DOES NOT COVER REPAIRS OR REPLACEMENTS MADE WITHOUT NOTIFICATION TO PRIME PUMP INC. PLANT OR TO REPAIR OR REPLACEMENT MADE AT OTHER THAN AUTHORIZED CENTER.

THIS WARRANTY IS EXPRESSLY IN LIEU OF ANY OTHER EXPRESS OR IMPLIED WARRANTIES INCLUDING ANY IMPLIED WARRANTY OF MERCHANTABILITY OR FITNESS FOR A PARTICULAR PURPOSE AND OF ANY OTHER OBLIGATION ON THE PART OF THE SELLER. NO AGENT, EMPLOYEE OR REPRESENTATIVE OF THE SELLER HAS ANY AUTHORITY TO BIND THE SELLER TO ANY AFFIRMATION, REPRESENTATION OR WARRANTY CONCERNING THE PRODUCT SOLD UNDER THIS WARRANTY. THERE ARE NO WARRANTIES WHICH EXTEND BEYOND THE DESCRIPTION ON THE FACE HEREOF. IMPLIED WARRANTIES, WHEN APPLICABLE, SHALL COMMENCE UPON THE SAME DATE AS THE EXPRESS WARRANTY PROVIDED ABOVE AND SHALL, EXCEPT FOR WARRANTIES OF TITLE, EXTEND ONLY FOR THE DURATION OF THE EXPRESS WARRANTY.

Some states do not allow limitations on how long the implied warranty lasts, so the above limitations may not apply to you. The only remedy provided to you under an applicable implied warranty or the express warranty shallbe the remedy provided under the express warranty, subject to the terms and conditions contained therein.

PRIME PUMP INC. shall not be liable for incidental and consequential losses and damages under the express warranty, any applicable implied warranty or claim for negligence, except to the extent that this limitation is found to be unenforceable under applicable state law.

Some states do not allow the exclusion or limitation of incidental or consequential damage, so the above limitation or exclusion may not apply to you.

This warranty gives you specific legal rights, and you may also

SECTION A - INTRODUCTION AND ARRANGEMENT OF INSTRUCTIONS

A 1.0 - Safe and trouble free operation of this pumping unit will be dependent on proper installation, and knowledge and application of proper operating techniques. It is recommended that the new owner study these instructions before installing and operating the unit.

A 1.1 - Where safety hazards are known to exist, they are described, along with the proper procedures for safe operation.

A 1.2 - The following instructions have been grouped in the sequence normally followed to put a pumping unit into service.

SECTION B - DESCRIPTION of pump unit and intended service

SECTION C - RECEIVING inspection

SECTION D - INSTALLATION requirements

SECTION E - GENERAL installation techniques for components

SECTION F - INSTALLATION sequence

SECTION G - OPERATION

SECTION H - MAINTENANCE

SECTION I - TROUBLE shooting

A 1.3 - An understanding of ALL of the instructions is important, however, the following check list shows the basic items that MUST be done to begin operation.

- ☐ Verify that the pump unit and installation site are ready for installation. (See Section C and D.)
- ☐ Install pump and connect to piping system. (See D 6.0 and Section F.)
- ☐ Connect to power and verify correct motor rotation. (See D 8.0, D 9.0, D 10.0, and E 11.0)
- ☐ Adjust propeller position. (See E 12.0)
- ☐ Verify proper operation. (See Section G)

SECTION B - DESCRIPTION OF PUMP UNIT AND INTENDED SERVICE

B 1.0 - The vertical lineshaft drive Axial Flow Pump is a high capacity, low head pump. The pumping element, (bowl assembly), is suspended from the bottom of the column pipe assembly, and is submerged in the water to be pumped. The column pipe delivers the water upward to the discharge elbow, which is connected to the system piping. A vertical hollow shaft motor is mounted on top of the discharge elbow, and delivers power down to the pumping element through the lineshaft. The lineshaft is contained within the shaft enclosing tube, which is centered within the column pipe. The shaft enclosing tube couplings serve as lineshaft bearings, and are oil lubricated.

B 2.0 - The Axial Flow Pump is designed to transfer water from a receiving sump to a higher level through a pipe line. The pump is commonly used to move cool, clear, fresh water; however, it can be used for any service that is within the design capabilities of the pump, and with other liquids, provided the liquid does not attack the materials from which the pump is constructed, or does not contain solids that would plug or damage the pump.

SECTION C - RECEIVING INSPECTION

A copy of the sales order, listing all separate items shipped for the order, is sent with the shipment as a packing list. Verify that all items shown on the packing list are accounted for. Any shortages, or damage to any of the items in the shipment, are to be reported in accordance with I.C.C. regulations. (NOTE: Do not install or operate a unit that has been damaged.)

The pump rotating element should turn with a moderate effort, without binding.

PRIME PUMP

PRIME PUMP CORPORATION

P.O. Box 8526 • Berkeley, CA 94707

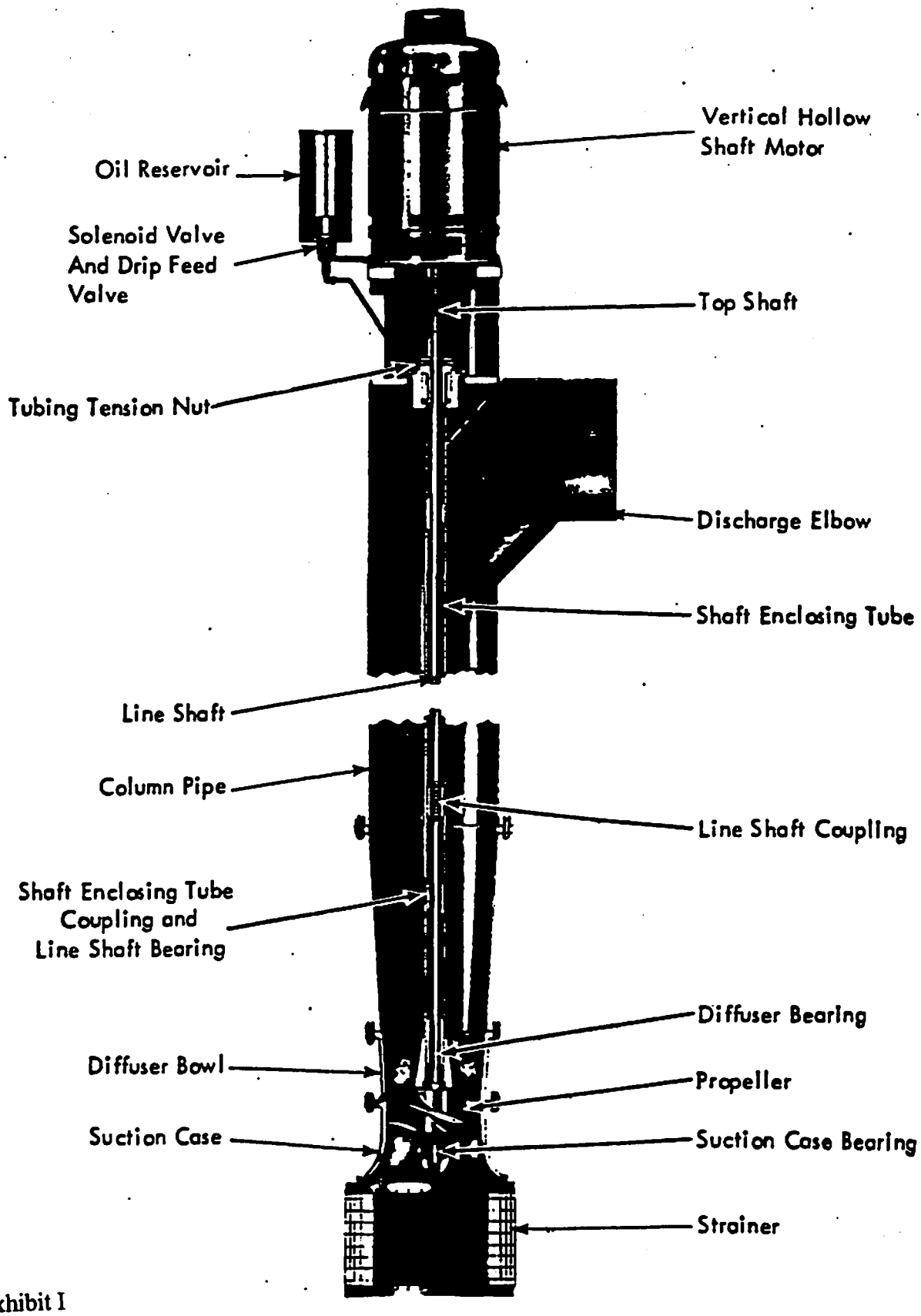

Exhibit I
Sheet 46 of 85

Typical Arrangement of
Axial Flow Pump Component

SECTION D - INSTALLATION REQUIREMENTS

D 1.0 - THE SUMP. The sump must be designed to supply an evenly distributed flow of water to the pump suction bell. Uneven flow encourages vortex formation, noisy operation, and can also increase power consumption. Sump velocities must be kept as low as possible, preferably below one foot per second. The location of the pump in the sump can be very important for satisfactory operation. Guidelines for the design of sumps are available from Berkeley Pump Company.

D 2.0 - TRASH SCREEN. Stringy material, and solid objects that are too large to pass through the pump, must be prevented from entering the pump intake. Properly spaced trash racks, or other suitable screens, can be installed at the sump inlet openings. NOTE: The sump must be thoroughly cleaned before the pump is installed and operated. If provision is not made at the sump inlet to exclude trash, a strainer MUST be installed on the pump suction case. Basket strainers, and strainers with anti-vortex plates, are available from Berkeley Pump Company.

D 3.0 - SAFETY. The flowing water in the sump can be very hazardous. All openings at the top of the sump should be covered for safety, and to prevent solid objects from falling into the sump.

D 4.0 - PUMP SELECTION. It is presumed that the pump components have been selected to match the performance requirements of the system with which it is to be applied. The column pipe assembly must have sufficient length to provide the required minimum submergence, when the surface of the water in the sump is at its lowest possible level. When the elevation of the water will vary, it is recommended that a switch activated by the liquid level be installed, to stop the pump at the minimum submergence level, to prevent possible damage to the pump.

D 5.0 - MOUNTING. The supporting structure must have sufficient strength and rigidity to support the operating weight of the pump unit, and to hold the discharge in proper alignment with the system piping.

D 6.0 - PIPING. Pipe sizes should be selected to minimize the head against which the pump must operate. All piping must be naturally aligned with the pump, and independently supported near the pump connection, to prevent strain on the pump unit. When a Dresser type coupling is used to connect the system piping to the pump, tie rods from the discharge pipe, across the coupling to the pump discharge elbow, are recommended to prevent hydraulic force from separating the joint. Valves that can be set to throttle, or restrict the flow through the pump and piping system, are NOT RECOMMENDED. (When the system head demand increases, the power demand also increases.) If the discharge pipe outlet can become submerged, a flap gate valve is recommended to prevent reverse flow. When a flap gate valve is not used, and there is a risk of reverse siphon action when the pump is stopped, an automatic siphon breaker valve should be installed at the highest point on the discharge pipe.

D 7.0 - METERING. When the performance of the pump is to be monitored, gauges can be installed to indicate pump discharge head, sump water level, and flow rate. Refer to Berkeley Pump Company for information on meters and gauges, and recommended location.

D 8.0 - ELECTRICAL POWER SUPPLY. The electric motor furnished with this pump unit is designed to operate with a power supply having the voltage, phase, and frequency characteristics stamped on the motor nameplate. To obtain satisfactory operation from this unit, electric characteristics of the power supply must be within the following limits, as established by the National Electric Code, NEMA, and pump power demand characteristics:

D 8.1 - VOLTAGE (Maximum deviation, line-to-line), ± 10% of nominal voltage stamped on motor nameplate.

D 8.2 - ELECTRICAL ANGLE BETWEEN PHASES (3-Phase only), 120°.

D 8.3 - FREQUENCY DEVIATION, ± zero Hz from nameplate value.

D 8.4 - AMPERAGE, (Single or 3-Phase) The highest amperage demand of any leg must not exceed the Service Factor Amps stamped on the nameplate.

(3-Phase only) - When operating in the correct direction of rotation under load, amperage demand on any leg must not exceed 5% deviation from the average of all three legs. (See Paragraph G 5.0 in Section G - OPERATION, for verification procedure.)

D 9.0 - ELECTRICAL CONTROL DEVICES AND SAFETY. The pump unit will be started and stopped by a motor control system. This may either be manual control, or automatic, under the control of a pilot switch.

(NOTE: A sign warning operators that the machine is automatically controlled, and could start at any time, must be posted in clear view of anyone near the pump.)

Every effort must be made to assure SAFE OPERATION.

D 9.1 - GROUNDING - DANGER - A GROUND FAULT IN AN ELECTRIC POWERED MACHINE, WHERE THE POTENTIAL OF THE FRAME OF THE MACHINE IS SIGNIFICANTLY RAISED ABOVE "GROUND" POTENTIAL, AND WHERE A PERSON CAN CONTACT THE EQUIPMENT OR ITS ENVIRONMENT, REPRESENTS A LIFE HAZARD.

THE FRAME OF THE ELECTRIC MOTOR OF THIS MACHINE MUST BE ELECTRICALLY CONNECTED TO "GROUND" (GROUNDED) FOR SAFETY. REFER TO NATIONAL ELECTRIC CODE FOR PROCEDURES.

D 9.2 - All electrical controls and switches must be enclosed in grounded metal enclosures.

D 9.3 - All wiring must be enclosed in metal conduit.

D 9.4 - A properly sized circuit breaker, or fused entrance switch, must be installed on the line side of the motor starter, to protect the power supply system.

D 9.5 - The starter switch contacts must be properly sized for the operating voltage and amperage demand.

D 9.6 - The motor must be protected against overload.

D 9.7 - Thermal overload elements in the motor control must be properly sized for motor full load current, with ambient temperature compensation. Each current carrying conductor must be protected.

D 10.0 - LOCAL APPLICATION REQUIREMENTS. Local electrical codes, or operating conditions, may require additional consideration.

D 10.1 - LIGHTNING ARRESTORS.

D 10.2 - GROUND FAULT INTERRUPTOR.

D 10.3 - UNDER VOLTAGE RELEASE.

D 10.4 - TIME DELAY - If unit is under "automatic" control by a pilot device, whereby the unit would restart on resumption of power, a time delay switch is suggested to delay starting of the motor until any reverse flow has stopped.

D 10.5 - SPACE HEATER FOR MOTOR.

SECTION E - GENERAL INSTALLATION TECHNIQUES FOR COMPONENTS

Berkeley Axial Flow pumps are custom manufactured units, using standard components that are specifically arranged with pipe sizes and overall length to suit the application and pump site.

The assembled length of the pump unit will often exceed the freight carriers limit. Therefore, the pump is usually shipped as components, which are assembled as the unit is installed into the sump, following the complete sequence listed in Section F.

When the overall length will permit unit shipment, the pump is factory assembled, except for the motor, which is always shipped in a vertical position, and the oil reservoir group, which is separate. After the pump unit and installation site are ready, raise the unit and rotate into the vertical position. Use care to prevent damage to the pumping element. Attach the strainer, if used, and lower the unit into position, following the sequence listed below, starting at Item F 12.0.

E 1.0 - Any foreign material (packing material, etc.) must be removed from the pump and associated accessories.

E 2.0 - All threaded joints and mating surfaces must be cleaned, to permit ready assembly and proper fit. Clean with wire brush and solvent.

E 3.0 - REQUIRED APPARATUS FOR LIFTING

E 3.1 - Adequate lifting apparatus, which will provide controlled raising and lowering, without side sway.

E 3.2 - Lifting slings, with sufficient length to permit lifting of various components without interference.

E 3.3 - Two lengths of structural steel beam, with sufficient strength to bridge curbing and support pump sections during assembly. Attach beams with bolts to channel iron clips provided on side of column pipe.

E 3.4 - Assortment of eye bolts, nuts, and washers to be used for rigging sections.

E 3.5 - Be very cautious when working near suspended loads. Do not work under a load. Wear protective gear.

E 4.0 - RIGGING FOR LIFTING

E 4.1 - PUMPING ELEMENT (Bowl Assembly) - Attach sling to eye bolts temporarily installed in diffuser flange.

E 4.2 - COLUMN PIPE, LINESHAFT, AND SHAFT ENCLOSING TUBE - When the crane has sufficient height capability, the column pipe can be lowered down over the shaft and shaft enclosing tube, which has been previously installed on the next lower section. Otherwise, the shaft and enclosing tube must be inserted into the column pipe section, and the entire sub-assembly will be lifted as a unit. Temporarily install an eye bolt into the lower column flange. Bring a rope down from the eye bolt and make a clove hitch around the shaft enclosing tube. Bring the rope end on down and make another clove hitch around the shaft. Maintain tension on the loose end of the rope at the shaft knot during lift to prevent the shaft from slipping. Rig for lifting by attaching lifting sling to eye bolts installed in the upper column flange, or to clamps attached to column assembly.

E 4.3 - DISCHARGE ELBOW - Attach lifting sling to eye bolts in the upper flange.

E 4.4 - BASEPLATE (When used) - Install eye bolts for attachment of lifting sling.

E 4.5 - MOTOR STAND (When used) - Attach sling to eye bolts in top flange.

E 4.6 - COMPLETE UNIT (Without motor) - Attach sling to eye bolts in upper motor mounting flange.

E 4.7 - MOTOR - Attach sling to lifting lugs provided on the motor frame, or in the case of small motors, attach sling to two eye bolts screwed into the upper end shield of the motor.

CAUTION: Do not lift the entire unit with a sling attached to the motor.

E 5.0 - COLUMN PIPE AND DISCHARGE ELBOW. Large diameter pipe is used to fabricate the discharge elbow and column pipe, to minimize

friction loss and velocity head. A taper section is used to expand from the pumping element bowl size to the larger column size. The discharge elbow outlet is usually plain end pipe, for connection to the system piping with a Dresser type coupling. A flange with register fit is provided at the top, for mounting the motor.

Short units have the discharge elbow and taper piece welded together as a single piece. These units are usually shipped pre-assembled with the pumping element.

Longer units have separate discharge elbow and taper column sections. Very long units will have one or more straight intermediate sections. Separate sections are joined by flanges.

E 6.0 - FLANGED JOINTS. The column pipe sections and discharge elbow are connected together with flanged joints. The flanges are machined flat, perpendicular to the shaft centerline. Male/female register fits are provided for concentric alignment of the sections. It is not common practice to seal the joint, since leakage is minimal. However, if a leakless joint is desired, a thin coating of plastic gasket or silastic sealant can be applied to the flange face just prior to assembly. Tighten flange bolts in opposing pairs, to assure even closure of the joint. Verify that the joint is closed all around.

E 7.0 - SHAFTING AND COUPLINGS -

E 7.1 - Prior to shipment, line shafting is straightened to within 0.005 inch maximum total indicated runout. Control of vibration and bearing wear will depend on care and handling and assembly of shafting.

Shaft ends have lathe cut threads, to keep clearance to a minimum for radial alignment control. Shaft threads tighten in the direction of pump rotation. (See Section E 11.0, "Rotation".)

CLOCKWISE pumps have RIGHTHAND threads.

COUNTER-CLOCKWISE pumps have LEFTHAND threads.

The faces of shaft ends butt together in the coupling, to assure control of angular alignment. Shaft lengths are coordinated with column pipe and shaft enclosing tube sections. Top shafts have a key way for the drive coupling gib key, and a long running thread for the top shaft nut. Top shaft nut threads are righthand, except 1-15/16 inch and larger, which are lefthand.

E 7.2 - Lineshaft couplings are machined from wrought bar stock, and have internal lathe cut threads, which tighten in the direction of rotation under load. A small hole is drilled through the side of the coupling at the midpoint, to vent air while the shaft is being installed. The ends of the shaft should butt at the midpoint of the coupling, which can be verified through the vent hole.

E 8.0 - SHAFT ENCLOSING TUBE AND BEARINGS. The shaft enclosing tube is furnished in sections, which are joined to each other the ends by bronze couplings, which also serve as alignment bearings for the pump lineshaft. The ends of the tube sections must be butted tightly during installation, to provide alignment of the pump unit bearing system, and to seal against leakage. Internal threads are lathe cut in the ends of the tube sections, and tighten in the direction of pump rotation. The ends of the pipe sections are machined simultaneously, to assure that the faces are parallel to each other, and perpendicular to the centerline. Two five foot sections and one bearing are factory pre-assembled on a ten foot length of shafting, to create a modular unit for ease of assembly. If necessary to assemble a ten foot module in the field, proceed as follows:

E 8.1 - Thoroughly clean one bearing, one ten foot length of lineshaft, and two five foot tube sections.

E 8.2 - Coat the threads of the bearing with oil. One end of the bearing is turned back on the O.D., to provide a wrenching surface. This end of the bearing is to be on the upper side in the final assembly. Engage the bearing into the end of the section of shaft enclosing tube, and screw bearing halfway into the end of the tube.

E 8.3 - Coat the shaft surface with oil. Slide the shaft enclosing tube section, with bearing in place, onto the shaft.

E 8.4 - Slide the second five foot length of shaft enclosing tube down over the shaft, and screw onto bearing protruding from the first section, leaving a gap approximately 1/4 inch between the tube ends. Apply pipe joint compound, or other oil and water resistant sealant, into the gap.

E 8.5 - Screw the two tubular sections into tight butt contact, with two large pipe wrenches, squeezing out all excess sealant. CAUTION: The tube joint must be tight enough to prevent leakage of water into the tube through the joint, however, over tightening of the shaft enclosing tube section can result in compressive failure of the pipe, resulting in a flaring at the ends of the pipe sections. Such a failure can cause a misalignment of the shaft enclosing tube and shaft bearing system. Do not over-tighten the tube joint.

E 8.6 - Wipe excess sealant off outside of joint, and inspect to verify that the tube ends are butted.

E 9.0 - ASSEMBLY OF THREADED PARTS. Shaft and shaft enclosing tube sections are matched for length with column sections, to provide proper "stick-up" during assembly, and must be properly combined prior to assembly.

The lineshafting and shaft enclosing tube threads can be cross threaded, if care is not taken at the beginning of an engagement.

NOTE: When using pipe wrenches to tighten a threaded joint, DO NOT bend the shaft or enclosing tube. Set wrenches with handles adjacent to each other, so that only torque is applied, without force to the side.

Coat the shaft threads with oil.

Center the lineshaft perpendicular over the shaft coupling. With the weight of the shaft forcing down, slowly rotate the shaft BACKWARD (Loosening direction. See "Rotation, Section E 11.0), until the threads can be heard, or felt, to "click", indicating that the threads are aligned for proper engagement, then rotate the shaft FORWARD (tightening direction), into the coupling. The shaft should screw into the coupling threads by hand, with very little resistance, until the shaft ends butt. If resistance is excessive, determine cause and correct before proceeding. Use two small pipe wrenches, one on the upper shaft and one on the coupling, and apply just enough torque, to verify that shaft ends are in firm contact. CAUTION: Over-torquing can gall the shaft faces, and cause misalignment. Final tightening will be accomplished by applying a torque with the motor as described in Paragraph E 13.0, "SHAFT TIGHTENING".

The shaft enclosing tube thread engagement procedure is the same as for shafting, except that sealant is used, and the joint is butted tight with wrenches.

E 10.0 - VERTICAL HOLLOWSHAFT MOTOR DRIVE COUPLINGS. The pump shaft passes upward through the hollowshaft of the motor, to the drive coupling at the top of the motor. The hole in the motor shaft is substantially larger than the shaft, to simplify motor installation. The drive coupling is bored a few thousandths over shaft diameter, to accurately center the shaft. The drive

coupling MUST be removed while installing the motor, to minimize the risk of contact with the top shaft, while the motor is being lowered into place. Verify proper rotation before installing the drive coupling. (See E 11.0.)

Two kinds of drive couplings are used with the vertical hollowshaft motors for Axial Flow Pumps.

E 10.1 - The "Self Release Coupling", (SRC), is fitted over drive pins at the top of the motor shaft, and is held in place by the weight of the shaft and propeller, and operating down thrust. If the lineshaft should unscrew due to accidental application of torque in the reverse direction, the SRC will rise on the drive pins, minimizing risk of damage to the lineshaft. NOTE: If this should happen, all shaft threads must be properly tightened before the pump is operated. (See E 9.0) The SRC can be used with both clockwise and counter-clockwise pumps. WARNING: Pumps with Self Release Couplings will spin backward when power is shut off, and if the amount of water returning through the pump is sufficient to sustain prolonged back spin, the unit can attain very high rotative speeds, which can cause damage to the pump. In this case, an automatic check valve must be installed to prevent back flow through the discharge pipe.

E 10.2 - The "Non Reverse Coupling", (NRC), will prevent rotation in the reverse direction for any reason, such as back spin on shut down, or electrical phase reversal. The NRC is available for counter-clockwise rotation only. Depending on the motor manufacturer's design, some NRC couplings are bolted to the top of the motor shaft. Others fit down over drive pins, as with the SRC.

E 11.0 - MODEL NUMBERS AND ROTATION. Berkel Axial Flow Pump model numbers are a combination of two sets of numbers. The last two digits are the nominal diameter of the propeller. The one or two digit set preceding the propeller diameter shows the size of the column pipe and discharge elbow.

The direction of pump rotation is determined when looking down from the top.

Models with ODD number propeller diameters (07, 09, and 13), rotate CLOCKWISE, and have RIGHT-HAND lineshaft and shaft enclosing tube threads.

Models with EVEN number propeller diameters (10, 12, 16, 20, and 26), rotate COUNTER-CLOCKWISE, and have LEFT-HAND lineshaft and shaft enclosing tube threads.

WARNING: OPERATION IN REVERSE ROTATION OF A PUMP WITH THREADED LINESHAFT CAN RESULT IN DAMAGE TO THE SHAFTING AND OTHER COMPONENTS. (See E 10.0.)

Before the motor drive coupling is installed, remove protective covering from the motor openings, turn motor shaft by hand to check for free rotation, then by momentarily energizing the motor, check the unit for correct direction of rotation. If rotation is wrong, interchange any two motor leads to reverse the direction of rotation of a 3-phase motor. For single-phase motors, see motor manufacturer's instructions for reversing.

E 12.0 - ADJUSTMENT OF PROPELLER POSITION. The propeller position is adjusted, before starting the unit, by raising the propeller and shaft and system with the top shaft nut at the motor drive coupling. After the motor is installed, and correct rotatio is verified, assemble the drive coupling, gib key, and top shaft nut at the top of the motor. Run the top shaft nut down on the top shaft thread, until the bottom face of the nut contacts the upper face of the motor drive coupling. At this point, the propeller is at the lowest position. Measure the distance from the upper face of the nut to the top of the shaft. Carefully turn the top shaft nut down on the shaft.

thread, to raise the shafting and propeller system approximately 1/4 inch. This adjustment is not critical, but the shaft and propeller must be free to rotate. Align a hole in the top shaft nut with a tapped hole in the drive coupling, and install the top shaft nut lock screw.

E 13.0 - SHAFT TIGHTENING. When installing shafting, use only enough torque (with small pipe wrenches) to be sure that the ends of the shafts are in contact. (See E 9.0.)

After completion of the installation, and after propeller position is adjusted, momentarily apply power to just bring the motor up to normal operating speed, then stop immediately. The starting impulse of the motor will cause all sections of shafting to tighten without any side loading. After tightening shaft threads, verify correct propeller position. (See E 12.0.)

SECTION F - INSTALLATION SEQUENCE

F 1.0 - CHECK OUT and prepare unit and site for installation.

F 2.0 - SET bowl assembly securely in a vertical position alongside the installation opening. Provide clearance for suction case bearing by blocking under suction bell.

F 3.0 - PREPARE the bottom column section, shaft, and shaft enclosing tube for assembly, and rig for lifting. Prepare all threads for assembly. Lift column, shaft, and tube group over bowl assembly. Keep tension on rope to tighten clove hitches, to prevent slipping.

F 4.0 - COAT shaft threads with oil. Screw into shaft coupling until shaft ends butt. (See E 9.0.) Coat the bearing threads with oil. Screw shaft enclosing tube onto bearing threads. Apply sealant, and make up tight with wrenches. (See E 8.0 and E 9.0.) Remove rope and eye bolt.

F 5.0 - MAKE-UP flange joint between bottom column section and bowl assembly. Verify that joint is completely closed all around.

F 6.0 - LIFT column and pumping element sub-assembly to give enough clearance for the installation of the strainer.

F 7.0 - INSTALL suction strainer (when used). If a strainer with anti-vortex plate is used, strainer guide vanes must be aligned with the suction bell ribs. Mark the top of the strainer to show the location of one of the guide vanes. This vane must be aligned with be direction of flow in the sump, to minimize interference. As the pump is installed, keep the mark pointing in the proper direction.

F 8.0 - LIFT column and bowl sub-assembly and lower into installation opening. Support sub-assembly with cross beams bolted against the channel iron brackets on the column pipe.

F 9.0 - POUR approximately one cup of lubricating oil (See H 2.0) into upper end of shaft enclosing tube. Install bearing. Install lineshaft coupling.

F 10.0 - INSTALL intermediate sections (when used) following F 3.0 through F 9.0, above.

F 11.0 - PREPARE the discharge elbow and upper sections of shaft enclosing tube with top shaft, and rig for lifting. Lift over sub-assembly in the installation opening. Make-up shaft and shaft enclosing tube. Lower the discharge elbow into position, and make-up flange joint.
NOTE: If discharge elbow is to be lowered over shaft and shaft enclosing tube previously installed, guide the upper shaft and shaft enclosing tube carefully through the hole provided in the discharge elbow, to avoid damage to the upper shaft and shaft enclosing tube.

F 12.0 - RIG the entire unit for lifting. Raise the unit to clear, and remove the support beams. Align with the discharge pipe, and lower the entire unit into position in the installation opening. Support the unit with the pump mounting angle iron sections, or baseplate (if used).

F 13.0 - ASSEMBLE the packing cup studs, gasket, and the packing cup into the discharge elbow, and secure in place with nuts. Install the O-ring and packing sleeve over the shaft enclosing tube in the

packing cup. Pour about one cup of oil into the top of the shaft enclosing tube. Install the tension nut. Tighten the tension nut securely, to compress the O-ring, and to pull the tube and bearings into straight alignment.

F 14.0 - TEST the top of the motor mounting flange with a spirit level. Check both parallel and perpendicular to discharge centerline. Adjust the mounting as necessary to make pump vertical centerline plumb, then lock pump mounting.

F 15.0 - CONNECT pump discharge elbow to discharge piping system.

F 16.0 - REMOVE motor canopy and drive coupling. Cover openings in top of motor to prevent entry of foreign material. Rig motor for lifting, and raise over unit. Lower carefully over top shaft. Do not permit contact between top shaft and motor quill. Rotate motor as necessary to align the conduit box with electrical power. Engage motor onto the register fit on motor mounting flange, and verify that the gap is closed. Secure in place with bolts. When the motor is bolted in place, the top shaft MUST center in the motor quill. If the shaft does not center, shaft may be bent, or unit may be misaligned. Temporarily fit the gib key into the key seat, and use a crescent wrench to rotate the shaft 180° in the direction of normal pump rotation. A bent shaft will change position when rotated. If shaft is not centered, but does not change position when rotated, motor may not be seated properly, or the pump vertical centerline is not plumb. Locate cause of misalignment and correct.

F 17.0 - CHECK motor lead grouping against name plate diagram for the available voltage, and make electrical connections for motor and control. (See Paragraphs D 9.0 and D 10.0.)

F 18.0 - CHECK rotation. (See E 11.0.)

F 19.0 - INSTALL motor drive coupling. Tighten NRC coupling hold down bolts in accordance with motor manufacturer's specification. (Self Release Couplings are fitted down over drive pins, and are not bolted.)

F 20.0 - INSTALL gib key and top shaft nut.

F 21.0 - SET propeller position. (See E 12.0.)

F 22.0 - INSTALL oil reservoir and connect oil tube to tension nut. Connect solenoid valve leads to electrical power. Fill reservoir with oil. (See H 2.1.)

F 23.0 - MOMENTARILY energize the unit to tighten shafting. (See E 13.0.)

F 24.0 - CHECK propeller position, and lock top shaft nut to drive coupling.

F 25.0 - REPLACE motor canopy.

F 26.0 - VERIFY a safe destination for the water to be pumped.

F 27.0 - START the unit, and set the oiler drip feed valve to a flow of 6 to 10 drops of oil per minute. While the unit is running, place index finger on the side of the tension nut, such that the finger touches the side of the tension nut and the top of the packing cup simultaneously, to check for relative motion between these two parts. If the tension nut is felt to be rocking, relative to the packing cup, stop the unit and tighten the tension nut.

F 28.0 - UNIT is now ready for service.

SECTION G - OPERATION

G 1.0 - STARTING. The unit will start when the control system actuates the motor starter to energize the motor. The lubrication system solenoid valve will automatically open. Refer to Paragraph H 3.1 for adjustment of lubrication system flow rate valve.

G 2.0 - STOPPING. The unit will stop automatically when the control system deactivates the motor starter, de-energizing the motor. The lubrication system solenoid valve will close, stopping the flow of oil.

G 3.0 - OBSERVE OPERATION. When the pump and system operation has been stabilized, verify that the pump unit is operating properly. Observe the following:

G 3.1 - VIBRATION - All rotating machines can be expected to produce some

vibration, however, excessive vibration can reduce the life of the unit. If the vibration seems excessive, discontinue operation and refer to "Trouble Shooting" section of this instruction.

G 3.2 - NOISE - When the unit is operating under load, listen closely for unusual sounds that might indicate that the unit is in distress. Determine the cause and correct.

G 3.3 - OPERATING TEMPERATURE - During operation, heat is dissipated from the frame of the electric motor. After a short period of time, the surface of the motor frame will be quite warm (as high as 150°F), which is normal. If the surface temperature of the motor is excessive, discontinue operation, determine cause of excessive temperature rise, and correct.

The pump unit is cooled by the liquid flowing through it, and will normally be cool to the touch.

G 4.0 - OBSERVE PERFORMANCE. When all pipelines are filled, and the pump and system are operating at a steady state condition, verify that the flow rate is satisfactory, and that the power demand is normal. Observe the sump, and verify that flow is satisfactory, without excessive turbulence or severe vortex funnel formation that could carry air down to the pump intake.

G 5.0 - VERIFY SATISFACTORY 3-PHASE BALANCE. (3-Phase motors only.) When operating in the correct direction of rotation at intended load, the amperage demand on any leg must not exceed five percent deviation from the average of all three legs. Verify as follows:

If the output terminals on the magnetic motor starter switch are not already identified, label them "L_1", "L_2", and "L_3". After correct direction of motor rotation is verified, label the conductors from the motor "T_1", "T_2", and "T_3", according to the connection to the starter terminals. This is the first connection combination in a sequence.

Start the unit and achieve steady state output. Measure and record the amps in the three legs. Add the three amp readings together and divide by three, to obtain the average.

Subtract the average amps from each of the three leg readings, to determine which has the greatest difference (deviation) from the average. Divide the greatest deviation by the average, then multiply times 100 to obtain the percentage deviation.

If the greatest deviation is less than 5%, then 3-phase balance is acceptable. If the greatest deviation exceeds 5%, the system is not well balanced and a second connection must be tried. At the terminals to the motor starter, reconnect motor lead T_1 to terminal L_2, T_2 to L_3, and T_3 to L_1. The motor will continue to operate in the same direction. Repeat the readings and calculate the percentage deviation as above.

If the deviation still exceeds 5%, reconnect in the third combination with T_1 to L_3, T_2 to L_1, and T_3 to L_2.
Repeat the readings and calculate the percentage deviation. If a satisfactory combination is found, mark motor leads for future re-connection. If the greatest deviation cannot be reduced to less than 5% by one of the three combinations, consult with the power supplier.

SECTION H - MAINTENANCE

H 1.0 - KEEP THE STRAINER AND SUMP CLEAN.

H 2.0 - PERFORMANCE. Observe the output of the unit periodically, and compare against its recorded initial performance. If performance has changed noticeably, determine cause and make adjustment, or repair as necessary to recover original performance.

H 3.0 - LUBRICATION.

H 3.1 - The lineshaft bearings are lubricated with oil. A covered oil reservoir with sufficient capacity (4 qts.) for about 72 hours of

continuous operation, is mounted at the top of the pump, above the tension nut. The oil is contained in the reservoir at atmospheric pressure, and is gravity fed through a tube to the tension nut, located at the top of the discharge elbow, or in the base of the motor mounting stand, from where it drips downward into the shaft enclosing tube, to the lineshaft bearings. A solenoid valve allows oil to flow only when the pump is operating. A sight feed valve is furnished to provide for adjustment of oil flow to lineshaft bearings, set at approximately 6 to 10 drops per minute.

Check oil reservoir periodically, and add oil as necessary to maintain an ample supply. Always refit oil reservoir lid properly after filling.

The oil used should be an ISO viscosity grade 32 turbine or machine oil, stored and applied with clean containers. See attached list for some oils that are available.

H 3.2 - The suction case bearing is packed with graphite grease during assembly, and does not require relubrication service.

H 4.0 - PERFORMANCE AND PARTS INFORMATION. Performance curves, and parts identification drawings and lists, are available for your Berkeley Axial Flow Pump. This information can be obtained from your authorized Berkeley Pump Company dealer, or by calling Berkeley Pump Company, toll free (within the United States except California, Hawaii, or Alaska) at (800) 227-1088 or toll (415) 843-9400, or write Berkeley Pump Company, P.O. Box 2007, Berkeley, California, 94702. ALWAYS refer to MODEL NUMBER and SERIAL NUMBER of unit when requesting this information.

SECTION I - TROUBLE SHOOTING - The reliability and performance of BERKELEY Axial Flow Pumps have been proven over many years of service with units that have been properly applied and maintained. If operating problems should appear, please review the following guidelines to isolate the problem area, and take corrective action. The following list shows the principal causes of problems, and presumes that the pump has been properly performance matched against your piping system requirements, and that the electrical power available is adequate for the motor requirements. Always examine the easiest probable cause first.

CAUTION: WHEN TROUBLE SHOOTING POWER DRIVEN MACHINES, BE THOUGHTFUL AND SAFE.

If, after checking the principal causes of problems shown in the table, the operation problem cannot be resolved, contact your local Berkeley Pump Company authorized dealer, or call Berkeley Pump Company, Berkeley, California. See H 3.0, above, for the phone numbers and addresses. Be prepared to identify the model number and serial number of the unit, and describe the symptoms of the problem.

SYMPTOM	PROBABLE CAUSE																														
	Group I Motor and Control											Group II Pump Unit												Group III System							
	A	B	C	D	E	F	G	H	I	J	K	A	B	C	D	E	F	G	H	I	J	K	L	A	B	C	D	E	F	G	H
Motor won't run	X	X	X	X	X	X	X	X																							
Motor runs, but no water delivered												X	X	X	X								X		X	X					
Not enough flow rate			X						X			X	X		X	X	X							X	X	X	X	X	X		
Not enough pressure			X						X			X	X		X	X	X									X	X	X	X		
Initial output satisfactory, then diminishes												X	X											X	X	X	X	X	X		
Excessive vibration										X	X	X	X	X	X			X	X	X	X	X	X			X		X	X	X	
Unusual noise										X	X	X	X	X				X	X	X	X	X	X			X		X	X	X	
Excessive temperature rise		X	X	X					X	X												X		X	X						X
Excessive ampere demand			X						X	X			X					X	X	X		X		X	X			X	X		
Abnormal bearing wear										X			X					X	X	X		X									

	CAUSE	CORRECTIVE ACTION
I.	MOTOR AND CONTROL	
A.	No voltage in power system	Check phase-to-phase on line side of disconnect switch. Notify power supplier.
B.	No voltage in one phase	Check phase-to-phase voltage on line side of starter contactor. Locate open circuit (circuit breaker, fuse, broken connections, etc.)
C.	Low voltage at motor	See Paragraph D 8.0. Discuss with power supplier.
D.	Motor leads improperly grouped for voltage	Refer to lead grouping diagram for motor.
E.	Control failure	Check pilot device, starter contactor, H-O-A selector switch, etc., for malfunction.
F.	Thermal overload switch open	Reset. Check for drag or other mechanical overload. Verify acceptable 3-phase balance. Verify proper size of overload protection device.
G.	Insulation failure	Check motor windings to ground with 500 volt megger.
H.	Open winding	Check motor leads leg-to-leg with ohmmeter.
I.	Frequency variation	Check frequency of power system. Must not deviate from motor name plate rating.
J.	Inadequate lubrication	Replace failed bearings. Refer to motor manufacturer's instructions for lubricant type and amount, and service intervals.
K.	Loose parts	Locate and repair.

II.	PUMP UNIT	
A.	Flow through strainer completely or partially obstructed	Clean strainer and sump.
B.	Flow through pump completely or partially obstructed	Locate and remove obstruction.
C.	Wrong direction of rotation	Reverse rotation of 3-phase motor by interchanging any two leads. WARNING: If pump has been operated under load with incorrect rotation, shafting may be uncoupled or distorted.
D.	Propeller loose on shaft	Repair.
E.	Internal leakage	Inspect pumping element for wear of controlled clearances.
F.	External leakage	Examine pumping element and column assembly for leaks.
G.	Tension nut too loose	Tighten. (See Paragraph F 27.0.)
H.	Shafting not straight	Straighten, or replace.
I.	Misalignment	Correct alignment.
J.	Loose parts	Repair.

	CAUSE	CORRECTIVE ACTION
II.	PUMP UNIT (Continued)	
K.	Inadequate lubrication	Refer to Paragraph H 3.0 for lubricant type and feed rate. Check oil supply, adjust sight feed valve. Verify that oil flows freely through tube to tension nut. Replace failed bearings. Verify proper alignment of shaft. NOTE: If water flows upward through tension nut around shaft, one or more shaft enclosing tube joints may be loose. See Paragraphs E 8.0 and E 9.0. Sealant at the tube butt joint may be necessary. Joint must not leak.
L.	Shaft broken	Replace. Determine cause and correct.
III.	MECHANICAL INSTALLATION AND PIPING SYSTEM	
A.	Piping System Head Demand at design flow rate exceeds pump capability (pipe size too small, flow rate too high, etc.)	Compare system pressure and flow rate requirement against pump characteristic curve. Check for closed or partially closed valve in discharge piping system. Reduce system pressure requirement. Increase pressur capability of pump.
B.	Pump Operating Head too high	Check for obstruction in discharge piping. Increase pipe size. Reduce vertical lift. Increase motor size.
C.	Insufficient submergence	Adjust liquid level control to increase submergence.
D.	Air or gas in liquid	Increase submergence. Baffle between sump inlet end pump intake to separate air.
E.	Turbulence in sump	Baffle to smooth flow.
F.	Approach velocity too high	Increase depth of liquid by adjusting liquid level control. Reposition pump in sump.
G.	Pump mounting not sufficiently rigid	Stiffen mounting. Isolate pump from piping forces with expansion joints, or flexible connectors.
H.	Inadequate ventilation	Provide sufficient air exchange to remove heat rejected by unit.

PRIME PUMP

AXIAL AND MIXED FLOW PUMPS

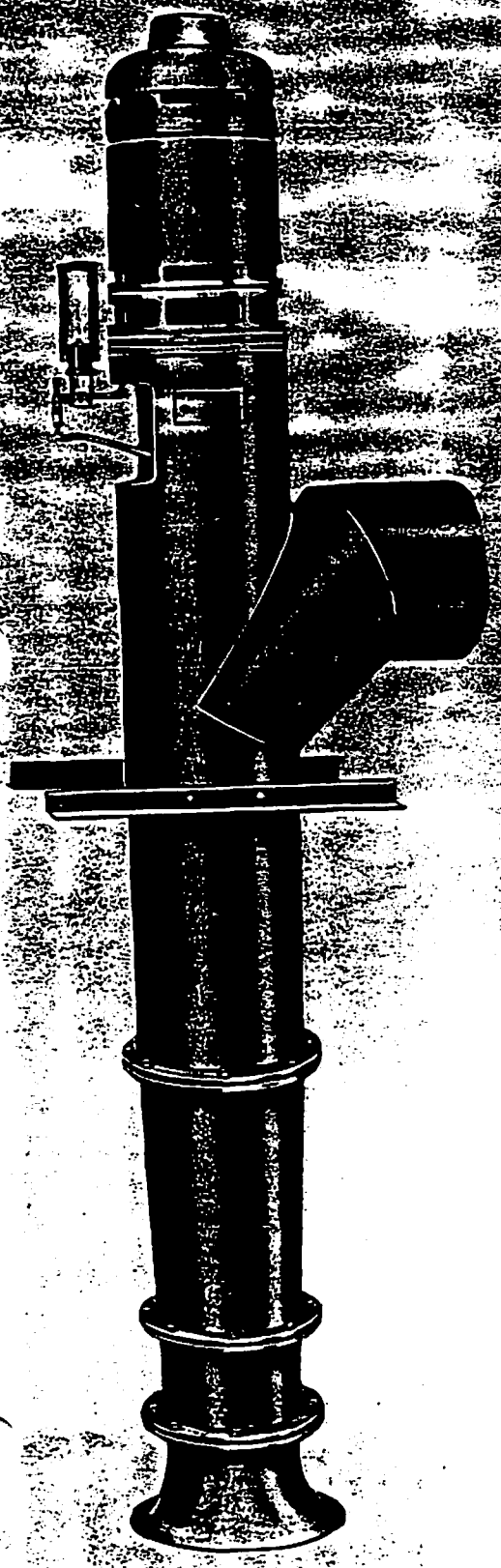

Moderate to High Capacities at Low to Medium Heads

For Industrial, Commercial, Municipal and Agricultural Applications

Exhibit I
Sheet 60 of 85

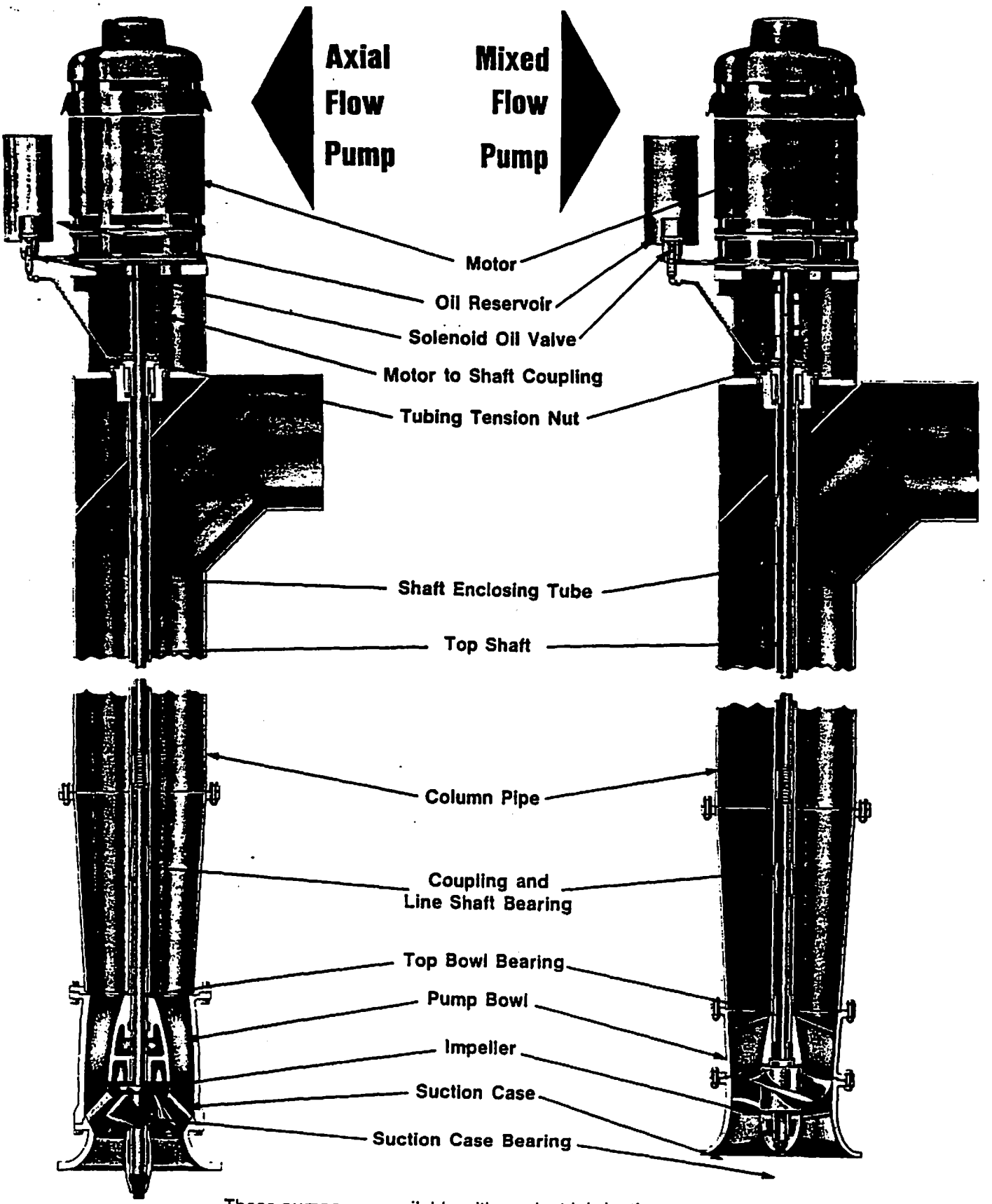

These pumps are available with product lubrication as well.

Bronze Bowl Liner

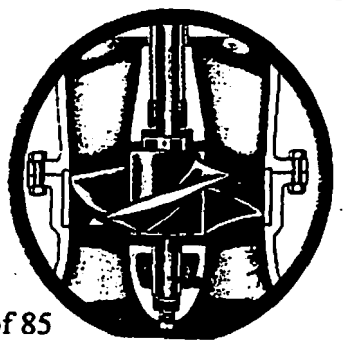

For extremely severe applications, replaceable bronze bowl liners are available for both the Mixed Flow and Axial Flow pumps. Utilization of these liners simplifies maintenance in certain areas where unusual wear may be anticipated under certain pumping conditions.

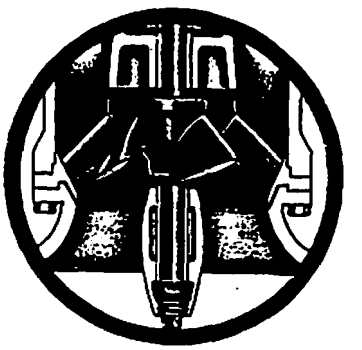

SPECIFICATIONS

Motor: Heavy duty vertical type with ball bearings. Solid shaft or hollow shaft design available to meet specific requirements of individual installation.

Motor Shaft Coupling: Flanged and bolted type on solid shaft motors for Axial Flow pumps, keyed to motor and pump with simple adjustment for setting impeller clearance. For vertical propeller pump settings, a non-adjustable, sleeve type coupling is used. Hollow shaft motors are available with a self-release coupling, or a non-reverse backstop type.

Discharge Elbow: Welded steel construction, designed and manufactured to maintain highest efficiency. Coated for maximum protection against corrosion.

Column: Same construction as discharge elbow. Tubing tension nut in head holds shaft enclosing tube and shaft in perfect alignment. Enclosed line shaft bearings of high quality bronze, oil lubricated. Threads tighten with shaft rotation. Special machining results in exceptional accuracy in column alignment, providing extended pump life.

Oiler: Extra large capacity external oil reservoir equipped with automatic solenoid oil valve and adjustable sight feed oil valve.

Pump Element: Bowl is close grained cast iron with extra smooth interior guide vanes designed for best efficiency. Oil lubricated, long diffuser bearing aligns and supports shaft. Cast bronze impeller is custom fitted to each pump application. Accurately machined, polished and balanced. Engineered for maximum performance and smooth operation. Suction case is cast iron, designed to provide ideal water guidance at minimum submergence. Guide vanes support grease packed end bearing, lengthening life of other bearings and insuring long pump life.

Prime's Axial and Mixed Flow pump users benefit from Prime's accurately machined parallel faces and tenon fits. This precision treatment of vertical pump components results in smooth, efficient operation, extra long pump life and low maintenance costs. Prime's flanged column construction facilitates pump, or motor extension in the field. No machine work required.

INCLINE INSTALLATIONS

A modified version of the Axial or Mixed Flow pump is available for inclined installation. This pump is equipped with a special angle discharge elbow and is used with a solid shaft motor only.

The incline installation eliminates the expensive platform structure commonly required with a vertical installation. Switches and controls may be mounted on high ground and motor servicing can be accomplished above high flood water level.

Pumps for incline applications are custom designed to meet specific requirements. Contact the factory for further information.

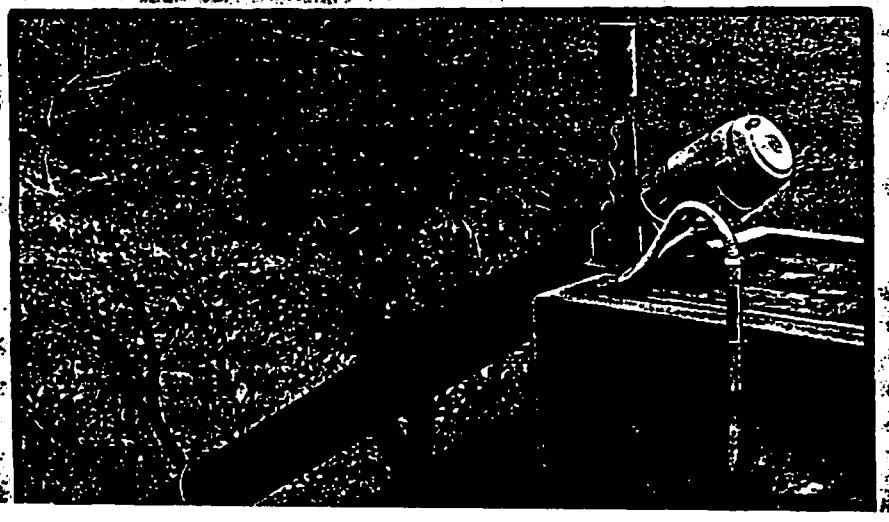

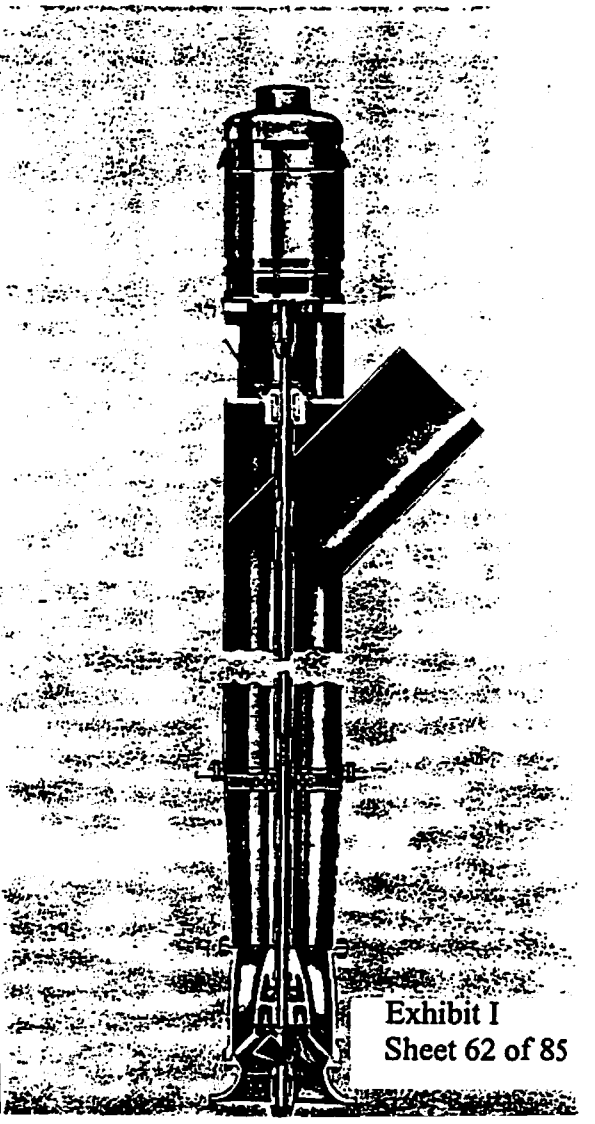

/PICAL INSTALLATIONS

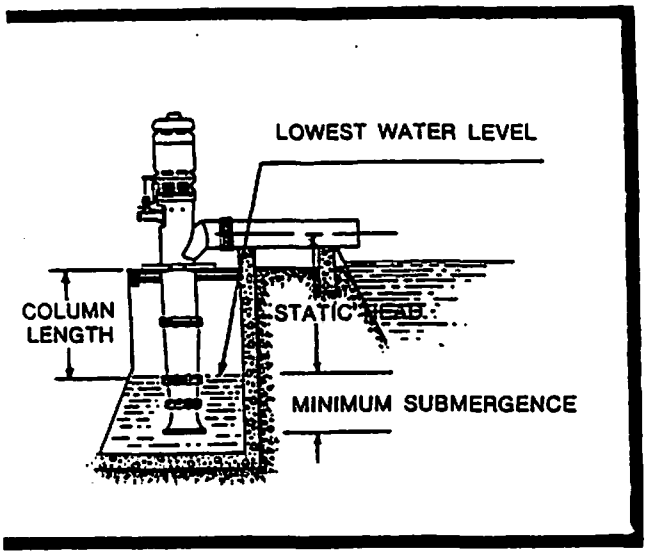

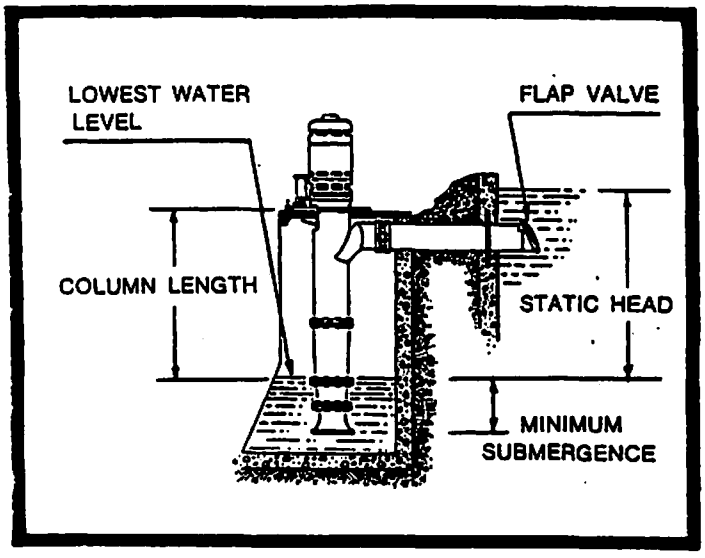

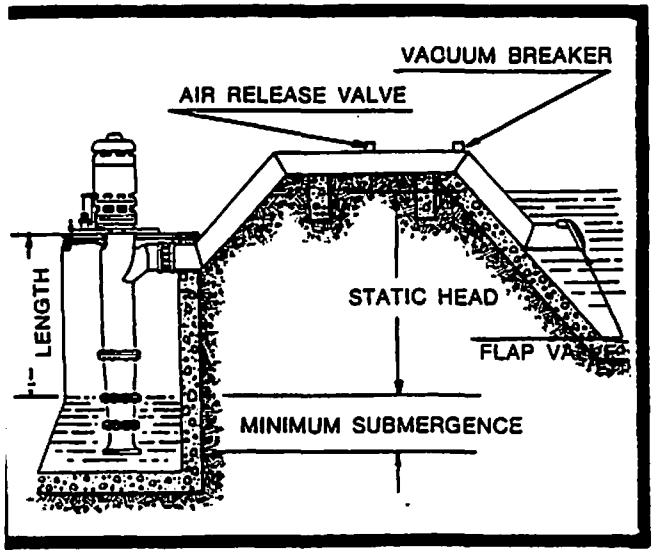

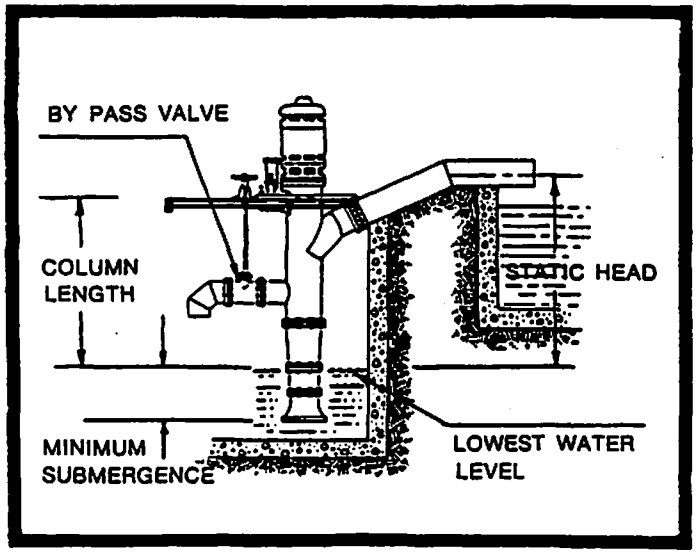

NOTE: WHEN SIPHON IS INVOLVED, REFER DESIGN TO FACTORY FOR APPROVAL.

Prime's Axial and Mixed Flow pumps are available for engine drive, belt drive, right angle gear drive, and combination motor/ gear drive.

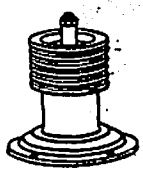

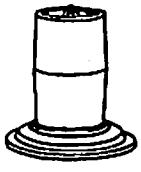

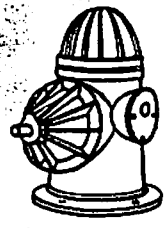

Prime Pump Corporation

P. O. Box 8526
Berkeley, CA 94707
(510) 620-0950

Exhibit I

Pumps

Northeast Pump Station (3 - 50 HP Submersible Pumps) and Southeast Pump Station (2 - 50 HP Submersible Pumps)

ANDERSON PUMP COMPANY, INC.
24719 W. Robertson Blvd.
P.O. Box 906
Chowchilla, Ca 93610

Application, Installation, and Operation Of Reliance® Tandem Seal Single and Polyphase Duty Master® A-C Submersible Pump Motors

UL Listed for Class I
Groups C and D
in Water or Sewage
(Short Time Duty,
15 minutes in Air)

A-C MOTORS

"Solutions You Can Trust"

Instruction Manual B-3629-12
April, 1996

TABLE OF CONTENTS

	Page
RECEIVING AND HANDLING	1
INSTALLATION	2, 3
MAINTENANCE	4, 5
THERMAL PROTECTION SYSTEM	5, 6
MOISTURE DETECTION SYSTEM	6, 7
LEAD COLOR CODING	8
STANDARD REPLACEMENT SEAL CROSS REFERENCE	9
STANDARD REPLACEMENT "O" RING CROSS REFERENCE	9
STANDARD REPLACEMENT SNAP RING CROSS REFERENCE	10

IMPORTANT

It is important that these instructions be studied by the personnel installing and operating this equipment. Read thoroughly before starting. Keep these instructions for future reference.

IMPORTANT

The motors specified in this instruction book are U/L listed for application in Class I Groups C and D explosion-proof environments. All repairs, other than lead reconnects and outer seal replacement, shall be performed by an authorized Reliance service facility. Any other repairs performed by the customer or non-Reliance service facilities negates the U/L listing and motor warranty.

©Copyright Reliance Electric Industrial Company, 1996.

Revisions to this manual require Hazardous Approval Engineering and/or UL approval.

®Reliance and DutyMaster are registered trademarks of Reliance Electric Industrial Company

RECEIVING AND HANDLING

ACCEPTANCE

Thoroughly inspect this equipment before accepting shipment from the transportation company. If any of the goods called for in the bill of lading or express receipt are damaged or the quantity is short, do not accept them until the freight or express agent makes an appropriate notation on your freight bill or express receipt. If any concealed loss or damage is discovered later, notify your freight or express agent at once and request him to make an inspection. We will assist you in collecting claims for loss or damage in shipment; however, this willingness on our part does not remove the transportation company's responsibility in reimbursing you for collection of claims or replacement of material. Claims for loss or damage in shipment must not be deducted from the Reliance Electric invoice, nor should payment of the Reliance Electric invoice, be withheld awaiting adjustment of such claims, as the carrier guarantees safe delivery.

If considerable damage has been incurred and the situation is urgent, contact the nearest Reliance Electric Sales Office for assistance. Please keep a written record of all such communications.

UNPACKING

If facilities for the shelter of equipment are not available, repack motor and store shaft down until ready for use.

After unpacking and inspecting to see that all parts have been received in good condition, turn the motor shaft by hand to be sure that there are no obstructions to free rotation.

The motor should be checked for oil leaks after being removed from the crate. If positive indication of an oil leak is found around the shaft seal or drive end bracket, notify the nearest Reliance Electric Sales Office.

APPLICATION

All Reliance Submersible Pump Motors include thermal devices as standard. These devices are required by UL on all motors 1 HP and larger listed Class I, Groups C and D. These devices are not recognized by UL for motors less than 1 HP but are included by Reliance for additional motor protection. **Motors less than 1 HP are supplied with a cautionary label and are suitable on applications where vapor or gas ignition temperatures exceed 280°C. These motors are listed for Class I, Group D only.**

Reliance Electric stocks common ratings through 100 HP continuous duty submerged in liquid, 15 minutes duty in air at nameplate horsepower. Designs through 250 HP and special continuous in air ratings are also available. (Continuous in Air Designs have a 1.0 Service Factor.)

Normally, there are four conditions during which a submersible sewage pump may be operated in gases or vapors.

1. When the wet well is being dewatered.
2. When the pump motor assembly is being lowered down the guiderails. The flow from the pump is needed during the installation process to insure that solids are cleared from the discharge flange area to insure proper seating.
3. When low-level cutoff controls fail.
4. When low-level sensors are positioned at the bottom of the pump assembly.

NOTE: *Outer shaft seal must be in liquid when motor is operated, whether motor is submerged or in air.*

Seals cannot be run in a dry environment without a significant reduction in seal life. If seal is to be run in a dry environment, a special design seal must be supplied. Standard seals applied in dry seal applications will not be covered by warranty.

CONTINUOUS OPERATION GASES OR VAPORS

It is the driven equipment manufacturer's responsibility to insure this motor product is properly applied.

Horsepower requirements are a function of pump design, impeller size & head and flow conditions. In gas operating time is a function of pit size, pump capacity, and flow conditions. Only the pump manufacturer can insure that the pump motor is properly applied for continuous in-gas or vapor operation. As with any motor product, it is essential that proper consideration be given to the load characteristics to insure the motor product will not be overloaded. Should such an overload occur, thermostats embedded in the windings will provide a signal to deenergize the motor. However, proper consideration of the application will prevent such an overload.

With reference to the diagram in figure 1, the following load conditions should be noted:

A. Below level #1 (bottom of the pump) fluid is not pumped and no load is reflected to the motor.

B. One pump should always be sized sufficiently large to draw the well down (even under maximum flow conditions). The maximum amount of time the motor will operate fully loaded and uncovered is the amount of time required to draw the well down from level #2 (top of the motor) to the bottom of the pump.

C. Time described in B above should not be greater than 15 minutes if full motor nameplate horsepower is required for this operation. (See Application Instructions).

D. The above application notes do not make allowance for:

(a) The heat exchanger effect of the attached pump. It is pumping a relatively cool fluid and will remove some heat.

(b) The motor does not operate fully loaded *completely* in gas. It is fully loaded as the motor is being uncovered.

(c) If the well is being drawn down from the top of the motor and maximum flow conditions exist, the influent flow will usually provide excellent cooling of the pump motor.

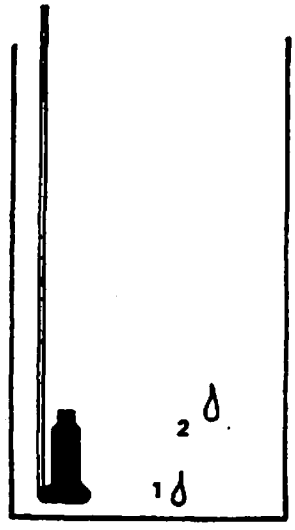

FIGURE 1

INSTALLATION

IMPORTANT

Read this manual thoroughly before installation.

1. **The user must select a motor starter and over-current protection suitable for this motor and its application. Consult motor starter application data as well as the National Electric Code and/or other local codes.**
2. **Maximum submergence of motor is not to exceed 200 feet in depth and/or 200 P.S.I. at motor seal.**
3. **Thermal Protectors must be connected. Leads marked P1 and P2 (See Figure 2).**
4. **Moisture Sensing Probes must be connected. Leads marked W1 and W2. (See Figure 3).**
5. **Check your power supply against final nameplate connection voltage.**

If required, the impeller should be heated slightly before pressing it on the shaft. *Under no circumstances should the impeller be driven on*

by pounding as this will damage the seal. When removing impeller warm slightly with a torch and pry impeller off evenly with either small pry bars or a wheel puller.

When the submersible pump motor leaves the factory it is ready for installation. No adjustment, venting or oil filling is required. For THREE PHASE motors the only connection to the motor lead cable is the power supply. For SINGLE PHASE motors the motor lead cable and power supply must be properly connected at the Control Box. Motor will operate successfully with frequency not more than 5% and voltage not more than 10% above or below nameplate data. Performance within this range will not necessarily be the same as the established performance at exact rated voltage and frequency.

All submersible pump motors will operate in either direction of rotation. To reverse direction of a THREE PHASE motor, interchange any two motor leads at the starter. To reverse direction of rotation of a SINGLE PHASE motor the proper connections must be made in the motor connection chamber; refer to the W/D's supplied in the motor connection chamber and Control Box.

Lifting eyes are supplied for purpose of installation and servicing. **(Do not use motor lead cables for lifting means.)** Normal care should be exercised to prevent mechanical damage to the seal, the frame and the insulated cable.

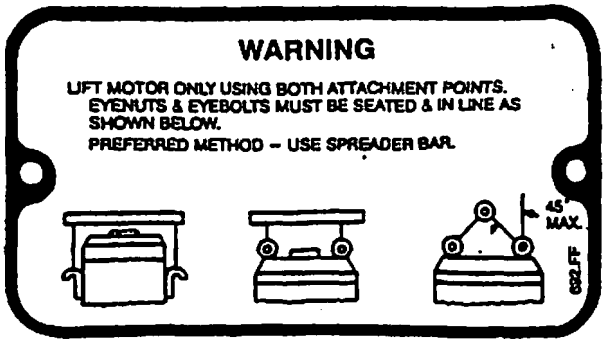

STARTING

CAUTION: Surface temperature of motor enclosure may reach temperatures which can cause discomfort or injury to personnel accidentally coming into contact with hot surfaces. (When installing, protection should be provided by user to protect against accidental contact with hot surface).

On initial start up the motor and pump should be checked for proper rotation prior to final application.

The unit is designed to protect all power connections against moisture. All Reliance Submersible Pump Motors have a lead connection chamber. – THREE PHASE dual voltage motors have 9 motor leads and SINGLE PHASE dual voltage motors have 8 motor leads in this chamber. All Submersible Pump Motors have 2 thermal protector leads and 2 moisture sensing probe leads in this chamber.

Leads are tagged for easy identification. A connection diagram is provided in the lead chamber. Motors can be connected for either high or low voltages. (Some motor ratings are built as single voltage units and as such are not reconnectable).

The motor lead cable assembly for all Submersible Pump Motors has 3 marked power leads plus two ground leads, two thermal leads and two moisture sensing probe leads in standard cable lengths of 25 feet.

Leads are brought through an epoxy sealed connector providing a mechanically strong water tight seal. The cap and cable assembly are available from Reliance Electric as a replacement part assembly. When replacing the lead wire cap, care should be taken not to nick or damage the "O" ring seal. Replace any damaged or nicked "O" rings.

WHEN REPLACEMENT CABLE ASSEMBLY IS REQUIRED, ORDER FROM RELIANCE ELECTRIC CO. USING MOTOR IDENTIFICATION NUMBER.

Exhibit I
Sheet 68 of 85

MAINTENANCE

With proper application and installation of monitoring devices, periodic inspection of motor seals is not required. Should a malfunction occur the motor has been equipped with a moisture detection system and thermal protection which will provide advance warning of impending failure allowing the user to plan a maintenance program before failure occurs.

GENERAL NOTES: ALL PARTS

1. Reliance® Submersible Motors utilize an explosion-proof Class I, Groups C and D, tandem seal design, with an oil chamber separate from the winding area.
2. Wound Stators – Reliance Submersible Motors utilize a wound stator which has been pressed into the frame. The stator insulation system has been designed for the temperature and electrical rating involved. If the motor failure is analyzed to encompass a winding failure, return the motor to an authorized Reliance Electric Service Shop.
3. Encapsulated Lead Connector Assembly – The lead connector assembly has been especially encapsulated to insure integrity of the motor. The connector can be removed from the motor in order to reconnect leads. Should the lead connector assembly be damaged or the integrity of the encapsulation be in question, it is required that a replacement lead connector assembly be ordered from Reliance Electric Company.

⚠ WARNING

MOTOR MAY CONTAIN GAS UNDER PRESSURE DUE TO HIGH TEMPERATURES FROM OPERATION WITHOUT BEING SUBMERGED. DISASSEMBLY MAY CAUSE BODILY INJURY. FOR ASSISTANCE CONTACT A RELIANCE OFFICE.

4. Hardware – All hardware is stainless steel and should be replaced with the same type.
5. If the Conduit Connection is used, a corrosion resistant conduit such as stainless steel is recommended.
6. When replacement cable assembly is required, order from Reliance Electric Industrial Co. using motor identification number.

MECHANICAL REPAIRS

U/L listed motors must be returned to an authorized Reliance Electric Service Facility for repairs other than to replace the outer seal. (See note on Table of Content page.)

To inspect the outer seal proceed as follows:

1. Remove outer snap ring (3), replace as needed.
2. Remove rotating outer seal (4), replace as needed.
3. Approved lubricating and insulating oil shall meet Reliance approved source sheet 4824-18-AF. Manufacturer's materials currently meeting this specification are as follows:

ITEM	MANUFACTURER	MANUFACTURER'S IDENTIFICATION OF MATERIAL
1	Sun Oil Company	Sun Fleet Regular SAE 10W
2	Standard Oil Co.	Sohio 62 SAE 10W
3	Shell Oil Company	Rotella 10 SAE 10W

MOTOR INSPECTION

After assembly, run motor in shaft down position for 30 seconds minimum to one minute maximum to allow seals to seat; then check for oil leakage. In some cases, a slight oil mist will appear around the seal. Wipe clean after test.

PAINTING AND SHIPPING

Before painting motor, cover exposed seal. Remove any paper, tape, etc., from seal area before crating motor. These motors can be shipped in shaft up or shaft down position. Care must be taken that exposed seal is not damaged during shipment. Carton must protect exposed seal from dirt, dust and damage.

ELECTRICAL REPAIRS

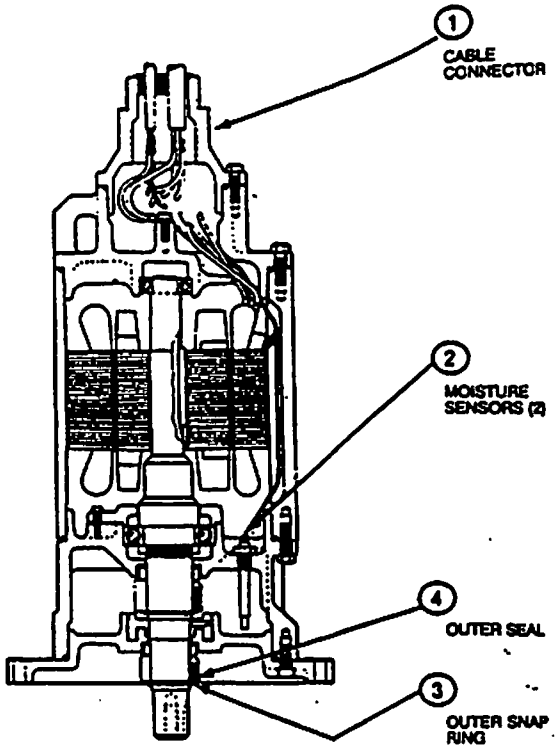

LEAD RECONNECT

The cable connector assembly may be removed to reconnect the leads without negating the U/L listing or the warranty.

WARNING

MOTOR MAY CONTAIN GAS UNDER PRESSURE DUE TO HIGH TEMPERATURES FROM OPERATION WITHOUT BEING SUBMERGED. DISASSEMBLY MAY CAUSE BODILY INJURY. FOR ASSISTANCE CONTACT A RELIANCE OFFICE.

PROCEDURE

1. Loosen four bolts, securing lead cable connector (1), two complete turns.
2. Attempt to break the cable connector seal thus relieving gas pressure within the motor. If gas pressure is not relieved loosen the bolts another turn and try again. Continue this process until the pressure is relieved and/or the cap is removed. Be extremely careful until the cable connector assembly is removed.
3. Remove cable connector and reconnect to desired voltage as shown on connection diagram inside the cable connector.
4. Insulate connectors with 4824-13-AU heat shrinkable plastic. If the 4824-13-AU shrinkable plastic is not available, tape may be used, but it should be an oil resistant type. Enough wraps should be used to insure the buildup will be sufficient to prevent the connector from breaking through the insulation. The following procedure should be employed: Five layers of plastic electrical tape followed by two layers electrical grade woven adhesive tape, such as Mystik 7020 or 3M #27, for oil and abrasion resistance.
5. Place "O" ring over fit and coat fit with Chevron SRI grease (not excessive).
6. Place cable connector back on motor, install four bolts, and tighten.

THERMAL PROTECTION SYSTEM

THERMAL PROTECTION

IMPORTANT

Reliance Submersible Pump Motors are equipped with thermal protection devices. Failure to properly connect or utilize this system voids motor warranty.

Thermostat leads marked P1 & P2 must be connected in series with the stop button of the 3-wire pilot circuit of the magnetic motor controller, so that the thermostat will open the circuit before dangerous temperatures are reached.

Exhibit I
Sheet 70 of 85

Thermostats are automatic reset for use in a normally closed circuit where the thermostat is connected in series with the holding coil of the magnetic starter. Thermostats provide "Over Temperature Protection 2" in accordance with NEMA MG 1-12.53. When the motor is so marked locked rotor protection is not provided by the winding over temperature protector. It is suggested that over current protection be used in the motor starter to insure locked rotor protection.

WARNING

MOTOR CONTROLLER MAY HAVE AUTOMATIC OR MANUAL OVERLOAD RESET. DISCONNECT ALL POWER LEADS TO MOTOR WHEN PERFORMING ANY WORK ON MOTOR OR DRIVEN EQUIPMENT.

A MANUAL, MOMENTARY START SWITCH IS REQUIRED TO PREVENT AUTOMATIC RESTART OF MOTOR WHEN THERMOSTAT RESETS.

If current through the thermostat will exceed the values listed in Figure 2 an intermediate control circuit relay must be used to reduce the current or the thermostat will not work properly.

Alternating Current

Volts	Continuous Amperes	Inrush Amperes
110-120	3.0	30
220-240	1.5	15
440-480	0.75	7.5
550-600	0.6	6.0

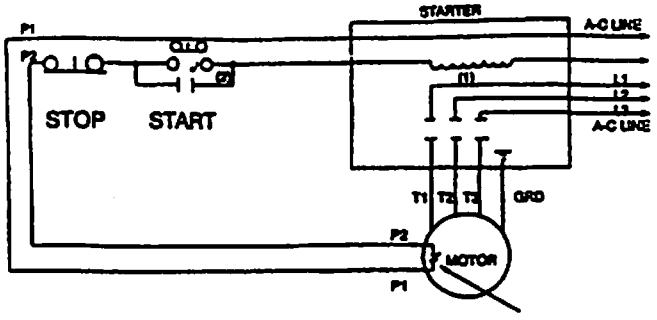

P1 & P2 Normally Closed Thermostat Leads
(normally open thermostats are not acceptable to UL)
(1) Starter Holding Coil
(2) Holding Coil Contacts – N.O.

FIGURE 2
TYPICAL THERMAL PROTECTOR WIRING DIAGRAM

MOISTURE DETECTION SYSTEM

MOISTURE SENSING PROBES

IMPORTANT

Reliance Submersible Pump Motors are equipped with moisture detection devices. Failure to properly connect or utilize this system voids motor warranty.

Moisture sensing probes, leads marked W_1, and W_2, must be used in conjunction with an induction relay. This device will detect moisture entering the oil chamber due to failure of the outer seal and, when properly connected to a warning device, will provide notification of needed maintenance. Integrity of system requires periodic test.

CONTROLS AND SIGNAL DEVICES

A control and signal device (not supplied by Reliance) must be installed at the job site to complete the moisture detection system.

Compatible controls are available from: Charles F. Warrick Co., Normandy Court, Royal Oak, Michigan 48073, (810) 549-4900.

CONTROL SELECTION AND ORDERING FOR CHARLES F. WARRICK CO. CONTROLS

ORDER BY COMPONENT NUMBER → 2800-XXX

A-C SUPPLY LINE VOLTAGE & FREQUENCY	
1	115V 50/60 Hz
2	230V 50/60Hz
4	480V 50/60Hz

CONTACT CONFIGURATION	TERMINAL PAIR		
	3-4	5-6	7-8
A	•	N.O.	•
B	•	N.C.	•
C	N.O.	•	N.O.
D	N.C.	•	N.O.
E	N.C.	•	N.C.
F	N.O.	N.O.	N.O.
G	N.C.	N.O.	N.O.
H	N.C.	N.C.	N.O.
J	N.C.	N.C.	N.C.
N.O.	NORMALLY OPEN		
N.C	NORMALLY CLOSED		
•	NONE PROVIDED		

NEMA TYPE ENCLOSURE	
1	1
4	2, 4, 6

Line voltages are nominal values and may be anywhere from nominal minus 15% to nominal plus 10%.

TYPE 2800-XXX MOTOR MOISTURE DETECTOR CONTROL

INSTALLATION

All type 2800-XXX controls are identified by a specific component number which follows the format 2800-XXX where the X's are replaced by numbers and letters indicative of the A-C supply line voltage and frequency, contact configuration and enclosure. Each control has a data label on the right hand side of the terminal block. In addition, each enclosed control has another data label on the outside of the enclosure cover.

Mount the control on a vertical surface with the transformer on the left hand side and accomplish all indicated wiring. Terminals on the control are numbered and are in the same relative position as the terminals shown on the wiring diagram.

Terminal pair 1-2 must be continuously energized from an A-C supply line of electrical characteristics shown on the data label.

Contacts must be wired into the electrical load circuit(s) of the warning devices as required. Each contact used for load duty must be wired in series with the load and that series branch circuit connected across a power source compatible with the load.

Wiring must be provided from the moisture detector sensor probe leads of the RELIANCE ELECTRIC motor designated W1 and W2 to terminals 9 and 10 of the 2800-XXX control.

Control leads should not be installed in the same conduit as power leads. Induced voltage can cause false moisture signals.

Exhibit I
Sheet 72 of 85

CONTACT OPERATION

Normally open load contacts close and normally closed load contacts open when the sensor probes detect the influx of moisture within the motor.

TEST PROCEDURE

A normally closed pushbutton and neon indicating lamp are provided as means of checking the moisture sensing components.

When the pushbutton is depressed, the indicating lamp will be illuminated to indicate (A) power is supplied to the control, (B) the control is operative, and (C) wiring to the moisture sensing probes in the motor is intact. This procedure should be performed periodically to confirm integrity of circuit.

SIGNAL DEVICES

The signal device may be audible (bell, buzzer, horn or siren) or visible (incandescent or neon lamp) or both – a signal device of your choice may be obtained from your local electrical supply house.

SYSTEM OPERATION

It is recommended that upon indication (by warning light, etc.,) of outer seal failure that the motor be removed from the installation and the oil and outer seal be replaced as soon as possible.

If reconditioning is not performed within a 30 day period it is recommended that the inner seal be thoroughly inspected and replaced if required.

When ordering parts or reporting trouble give Sales Office complete Nameplate Data.

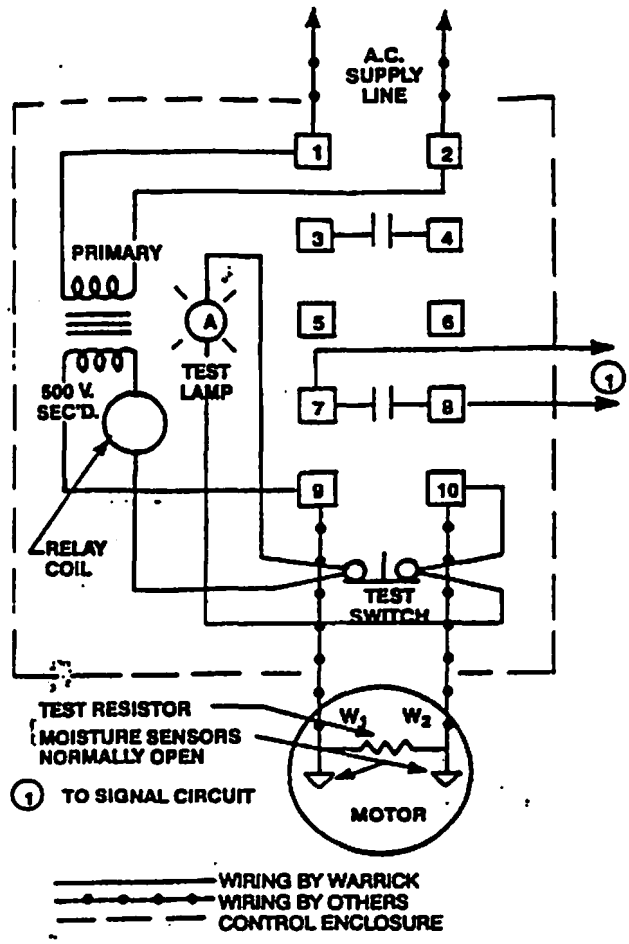

FIGURE 3
MOISTURE SENSING CIRCUIT
TYPICAL WIRING DIAGRAM

LEAD COLOR CODING

		BLACK LEAD	WHITE LEAD	RED LEAD	ORANGE LEAD	GREEN LEAD
Power Cable	Polyphase	T_1	T_2	T_3	—	Ground
	Single Phase	T_1	T_4	T_A	—	Ground
Control Cable	All	P_1	P_2	W_1	W_2	Ground

Exhibit I
Sheet 73 of 85

STANDARD REPLACEMENT SEAL CROSS REFERENCE

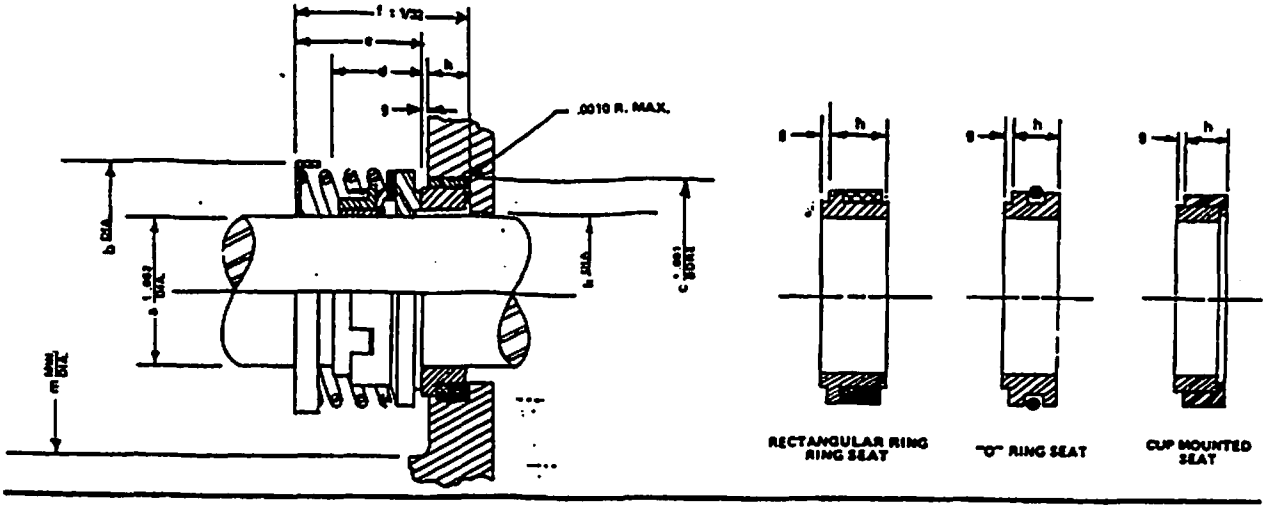

PURCHASING SPECIFICATIONS													
Part No. 64262-	a	Crane Type Seal	Type Seat	Spring Code No.	b	c	d	e	f	g	h	k	m
12-A	1.250	T-21	Cup Ceramic	BP1C1	1-15/16	1.875	47/64	1-1/16	1-1/2	1/16	3/8	1-7/16	2-3/16
12-B	1.500	T-21	Cup Ceramic	BP1C1	2-3/16	2.125	47/64	1-1/8	1-9/16	1/16	3/8	1-11/16	2-3/16
12-C	1.750	T-21	Cup Ceramic	BP1C1	2-5/8	2.500	49/64	1-3/8	1-7/8	1/16	7/16	1-15/16	2-7/8
12-D	2.000	T-21	Cup Ceramic	BP1C1	2-7/8	2.750	49/64	1-1/2	2	1/16	7/16	2-3/16	3-3/16
12-E	2.250	T-21	Cup Ceramic	BP1C1	3-1/8	3.125	49/64	1-11/16	2-1/4	1/16	1/2	3-7/16	3-7/16
12-G	3.00	T-21	Cup Ceramic	BP1C1	4.00	4.125	2.687	2.062	2.687	0.06	0.56	3.19	4.50
18-F	2.75	T-21	Cup Ceramic	BP1C1	3.75	3.500	0.796	1.125	1.75	0.03	0.595	2.94	4.12
18-G	3.00	T-21	Cup Ceramic	BP1C1	4.00	3.875	0.796	1.125	1.75	0.06	0.56	3.19	4.50
18-N	2.75	T-21	Cup Ceramic	BP1C1	3.75	3.50	0.796	1.125	1.75	0.06	0.56	2.94	4.12
8-J	3.25	T-21	Cup Ceramic	BP1C1	4.84	4.125	2.187	2.187	2.968	0.06	0.69	3.44	4.88

STANDARD REPLACEMENT "O" RING CROSS REFERENCE

Part No. 421900	I.D.	Nominal W.	UL Listed Material	Approved Suppliers and Compound Number	
60-FU	3.750	0.139	BUNA N	National Seal	No. B-46A
72-FU	4.500	0.125	BUNA N	Parker Seal	N-219-7
94-FU	5.875	0.125	BUNA N	Precision Rubber	No. 1197
100-FU	6.250	0.125	BUNA N	Crane Packing	No. 2561
124-FU	7.750	0.125	BUNA N		
144-FU	9.000	0.125	BUNA N		
168-FU	10.500	0.125	BUNA N		
192-FU	12.000	0.125	BUNA N		
208-FU	13.000	0.140	BUNA N		
240-FU	15.000	0.140	BUNA N		

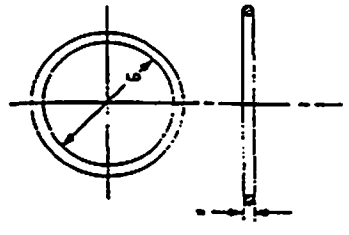

TO BE USED AT 8-1/2 I.D. @ 3/32 NOM. THICKNESS

Exhibit I
Sheet 74 of 85

STANDARD REPLACEMENT SNAP RING CROSS REFERENCE

Part No. 47174-5-	a	T	Shaft Size	Waldes Catalog Number	Remarks
A	1.156 + .010 − .015	.050 ± .002	1-1/4	5108-125-H	#420 Stainless
B	1.387 + .010 − .015	.050 ± .002	1-1/2	5108-150-H	#420 Stainless
C	1.637 + .013 − .020	.062 ± .003	1-3/4	5108-177-H	#420 Stainless
D	1.850 + .013 − .020	.062 ± .003	2	5108-200-H	#420 Stainless
E	2.081 + .015 − .025	.078 ± .003	2-1/4	5108-225-H	#420 Stainless
H	2.543 + .015 − .025	.093 ± .003	2-3/4	5100-275-H	#420 Stainless
F	2.775 + .020 − .030	.093 ± .003	3	5100-300-H	#420 Stainless
G	3.006 + .020 − .030	.093 ± .003	3-1/4	5100-325-H	#420 Stainless

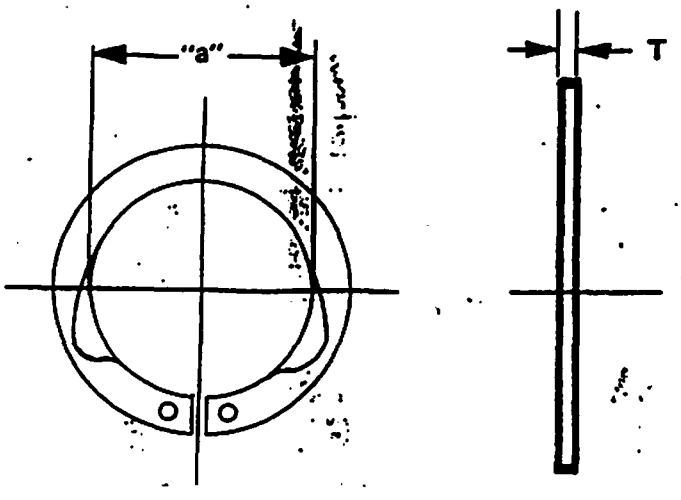

NOTE: *Outer shaft seal must be in liquid when motor is operated, whether motor is submerged or in air.*

Seals cannot be run in a dry environment without a significant reduction in seal life.

Exhibit I
Sheet 75 of 85

INSTALLATION AND OPERATING INSTRUCTIONS

GENERAL:

The type 2800 is a conductance actuated control for detection moisture in the oil chamber of a submersible pump motor. It is used as a warning device to indicate a seal leakage and to signal the need for preventative maintenance.

INSTALLATION:

Mount controlbox vertically on wall or other solid structure. and accomplish all indicated wiring. Terminals on the control are numbered and are in the same relative position as shown on the wiring diagram. Terminal pair 1-2 must be continuously energized from an A.C. supply line of electrical characteristics shown on the data plate. Contacts 3-4, 5-6 and 7-8 are available for load duty, and if required, must be wired in series with the load device or devices, and that series branch circuit connected across a power source compatible with the load. Terminals 9-10 are connected to the moisture sensing probes in the motor marked W1-W2 via the cable provided with the motor.

OPERATION:

Normally the oil surrounding the probes is nonconductive and the control will be deenergized. An influx of moisture past the outer seal and into the oil reservoir will change the conductivity of the oil and this condition will cause the relay to energize. Load contacts 3-4, 5-6 and 7-8 will change from their normally open or normally closed position when the control energizes.

TEST PROCEDURE:

A normally closed pushbutton and neon indicating lamp are provided as a part of the control for testing the moisture sensing components. The motor manufacturer has provided a 330,000 ohm resistor across the probes inside the motor to complete the test. When the test pushbutton is depressed, the neon indicating lamp will be illuminated to indicate:

(A) power is supplied to the control
(B) the control is operative
(C) the wiring to the moisture sensing probes in the motor is intact

This check does not simulate a seal leakage. An additional check can be made by removing the enclosure cover and momentarily placing a jumper (or 20,000 ohm resistor) across terminals 9-10 on the control. This will energize the control, and test out the neon indicating lamp and associated voltage dropping resistor across terminal 2 and 4.

CAUTION: VOLTAGE WILL BE PRESENT AT ALL TERMINALS ON THE CONTROL WHEN THIS TEST IS BEING MADE.

WARRICK CONTROLS, INC.
4237 NORMANDY CT.
ROYAL OAK, MI. 48073-2264

STANDARD

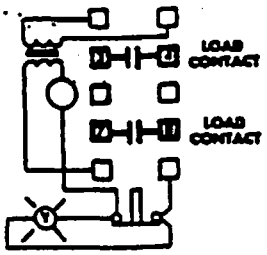

C
CONTACT CONFIGURATION

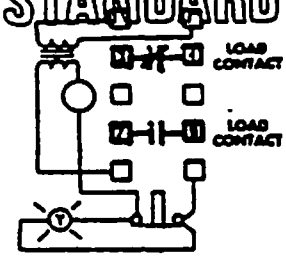

D
CONTACT CONFIGURATION

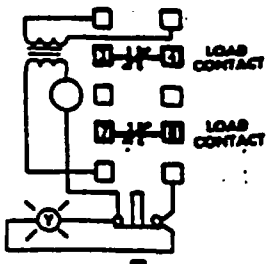

E
CONTACT CONFIGURATION

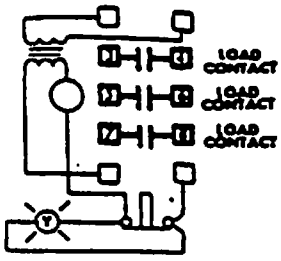

F
CONTACT CONFIGURATION

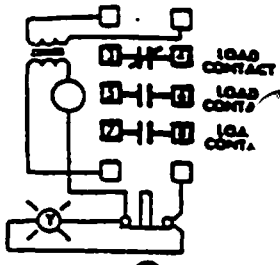

G
CONTACT CONFIGURATION

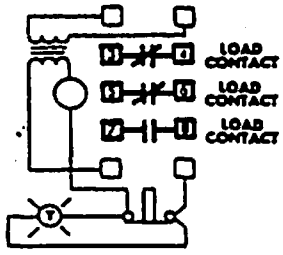

H
CONTACT CONFIGURATION

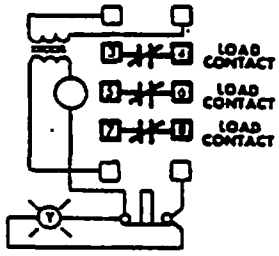

J
CONTACT CONFIGURATION

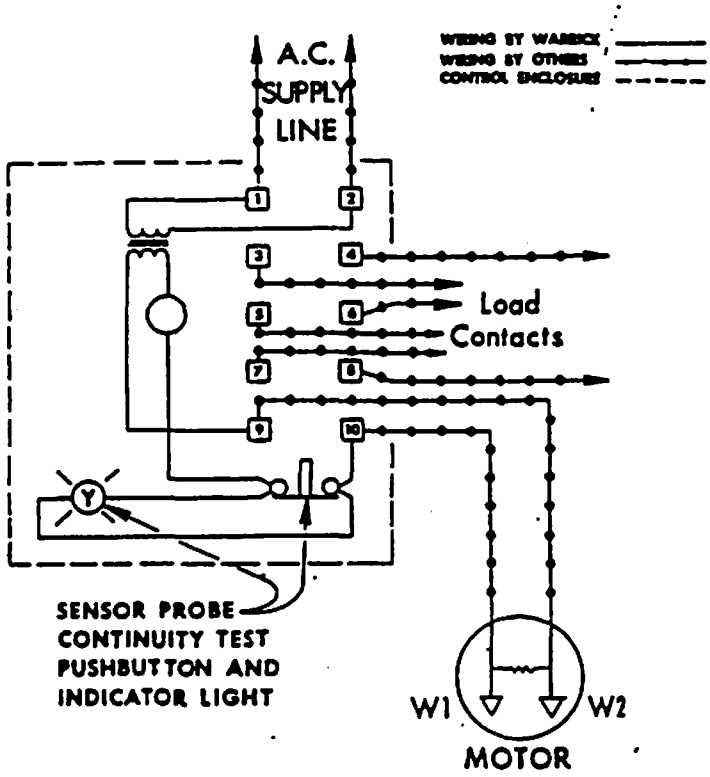

TYPE 2800 FORM 4d1

- ENCLOSURE TYPE
  1 – Nema 1 or 4 – Nema 4 or 4X – NEMA 4*
- CONTACT CONFIGURATION
  C, D, E, F, G, H or J from diagrams at top
- SUPPLY LINE VOLTAGE
  1 – 115 VAC
  2 – 230 VAC
  4 – 460 VAC
  5 – 575 VAC

*See DWG#2578 for Dimensions of 4X

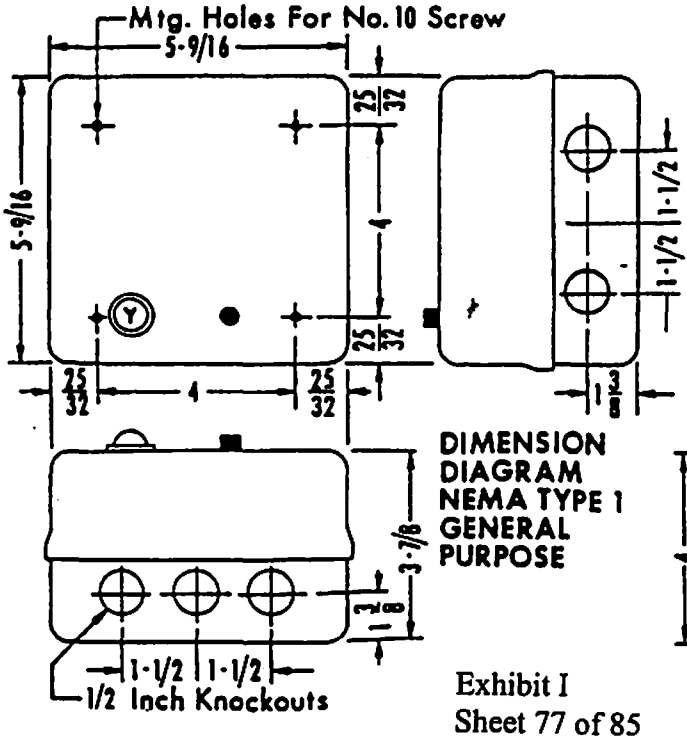

DIMENSION DIAGRAM NEMA TYPE 1 GENERAL PURPOSE

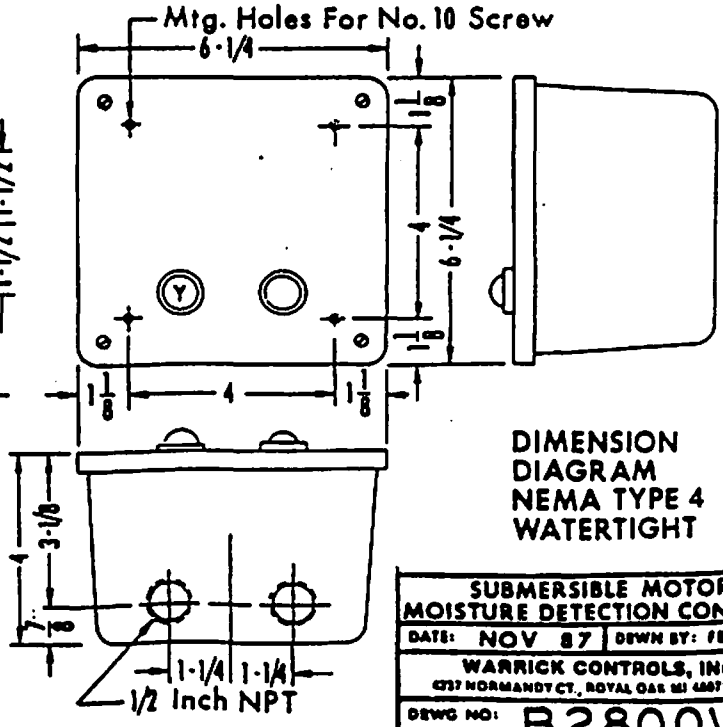

DIMENSION DIAGRAM NEMA TYPE 4 WATERTIGHT

SUBMERSIBLE MOTOR MOISTURE DETECTION CONTROL	
DATE: NOV 87	DRWN BY: FB
WARRICK CONTROLS, INC. 6737 NORMANDY CT., ROYAL OAK MI 48073 2764	
DRWG NO: B2800WIA	

Exhibit I
Sheet 77 of 85

Reliance - Tom Smith
Bill Cummin
847-888
510

DUTY MASTER A-C MOTORS
1/2 – 450 HP, UL LISTED, EXPL.-PROOF

Rockwell Automation
Reliance Electric

TANDEM SEAL
SUBMERSIBLE MOTORS
TOTALLY-ENCLOSED • NON-VENTILATED

THREE PHASE – 200/400, 230/460 or 575 Volts (4)

Horsepower	RPM	Frame Size	Motor Price (w/25' of cable) (4) (5)			Additional Cable (price per 5 ft) (3)		
			200, 230 Volt (4)	400, 460 Volt	575 Volt	200, 230 Volt	400, 460 Volt	575 Volt
40	3600	250TY	$6555	$6555	$6555	$128	$60	$54
	1800	250TY	6659	6244	6244	128	60	54
	1200	320TY	9258	8835	8835	128	60	54
	900	320TY	–	10867	10867	–	78	54
	720	360TY	–	14904	14904	–	96	96
50	3600	320TY		9981	9981	220	78	54
	1800	320TY	8401	7307	7307	220	78	54
	1200	320TY	10465	9532	9532	220	78	54
	900	360TY	–	13806	13806	–	96	54
	720	360TY	–	16672	16672	–	128	66
60	3600	320TY		9981	9981	268	96	78
	1800	320TY	11530	9346	9346	268	96	78
	1200	320TY	14569	12030	12030	268	96	78
	900	360TY	–	14113	14113	–	96	78
	720	L360TY	–	17720	17720	–	128	128
	600	440TY	–	40540	40540	–	490	490
75	3600	320TY		12938	12938	128	128	96
	1800	320TY	16031	12115	12115	128	128	96
	1200	360TY	–	12390	12390	–	128	96
	900	360TY	–	15889	15889	–	128	96
	720	440TY	–	40540	40540	–	490	490
	600	440TY	–	42567	42567	–	490	490
100	3600	360TY		13682	13682	–	128	128
	1800	360TY	–	12881	12881	–	128	128
	1200	360TY	–	16031	16031	–	128	128
	900	360TY	–	20637	20637	–	128	128
	720	440TY	–	43363	43363	–	490	490
	600	440TY	–	45531	45531	–	490	490
125	1800	360TY	–	15829	15829	–	190	190
	1200	360TY	–	19459	19459	–	190	190
	900	360TY	–	23735	23735	–	190	190
	720	440TY	–	44900	44900	–	490	490
	600	440TY	–	49955	49955	–	490	490
150	1800	440TY	–	39130	39130		410	410
	1200	440TY	–	41066	41066	–	410	410
	900	440TY	–	43140	43140	–	490	490
	720	440TY	–	46161	46161	–	490	490
	600	440TY	–	53085	53085	–	530	530
200	1800	440TY	–	43043	43043	–	410	410
	1200	440TY	–	45195	45195	–	410	410
	900	440TY	–	46677	46677	–	490	490
	720	440TY	–	49079	49079	–	490	490
250	1800	440TY	–	45195	45195	–	410	410
	1200	440TY	–	47454	47454	–	410	410
	900	440TY	–	49600	49600	–	490	490
	720	440TY	–	52768	52768	–	490	490
300	1800	440TY	–	47455	47455	–	410	410
	1200	440TY	–	49827	49827	–	410	410
	900	440TY	–	56650	56650	–	490	490
350	1800	440TY	–	48171	48171		490	490
	1200	440TY	–	54620	54620	–	490	490
	900	440TY	–	60048	60048	–		
4007	1800	440TY	–	54046	54046	–	490	490
	1200	440TY	–	57640	57640	–	490	490
450	1800	440TY	–	63860	63860	–	490	490

For footnotes and additional information, refer to page B-1358.

Exhibit I
Sheet 78 of 85

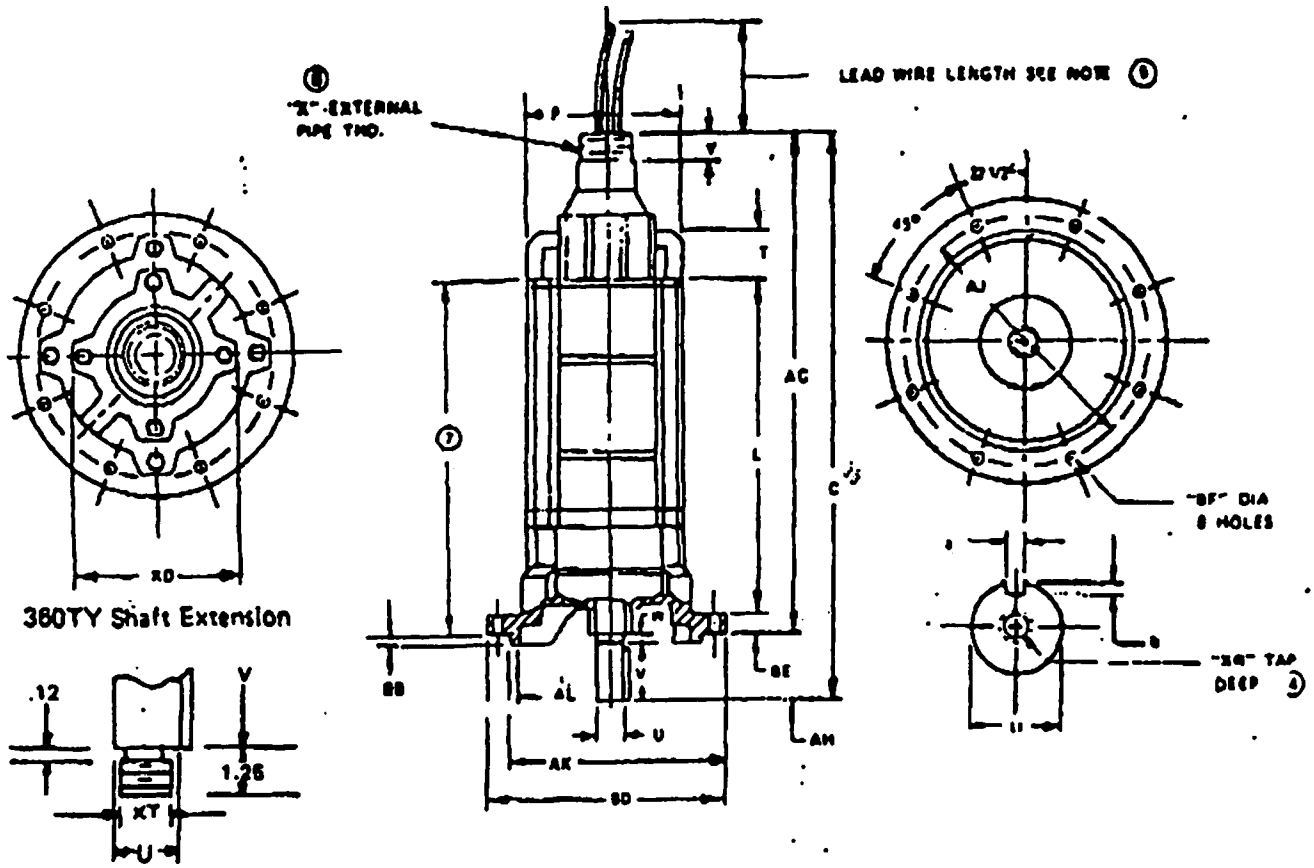

DIMENSIONS ARE IN INCHES

FRAME	C	L	P	T	U(3)	V	W	AG	AH	AJ	AK(6)	AL(2)
140TY	25.44	15.38	8.00	2.25	.8750	1.25	.31	23.88	1.56	10.00	(9)	9.125
180TY	26.66	16.50	9.62	2.25	1.2500	2.00	.28	24.38	2.28	11.50	(9)	10.625
210TY	31.69	21.12	11.50	2.25	1.4380	2.00	.25	30.12	1.66	14.12	13.125	12.00
250TY	38.53	24.12	12.75	3.50	1.750	3.31	.25	35.50	3.03	16.00	15.000	14.00
320TY	43.12	24.69	15.75	4.25	2.500	3.19	2.12	37.81	5.31	17.28	16.000	15.25
360TY	49.81	31.25	18.38	4.25	2.4997	3.19	2.12	43.25	6.56	18.75	17.500	15.15
L360TY	51.81	33.25	20.38	4.25	2.4997	3.19	2.12	45.23	6.50	18.75	17.500	15.25

FRAME	BD(1)	BE	BF	XR(4)	XT	LEAD CONNECTION X(8)	LEAD CONNECTION V	LEAD CONNECTION XD	KEYWAY BB	KEYWAY a	KEYWAY b	WEIGHT
140TY	11.062	.75	.44	3/8-16	(9)	2-1/2-8	1.25	5.50	.12	.187	.09	160
180TY	12.375	.75	.56	1/2-13	(9)	1-2/2-8	1.25	6.50	.12	.250	.12	200
210TY	15.250	.75	.56	5/8-11	(9)	2-1/2-8	1.25	7.75	.25	.375	.19	315
250TY	17.000	1.00	.69	5/8-11	(9)	2-1/2-8	1.25	7.75	.25	.375	.19	750
320TY	18.750	.88	.69	3/4-16	(9)	3/8	1.25	10.88	.25	.50	.25	1150
360TY	20.25	1.12	.69	(9)	1-1/2-12	3/8	1.25	10.88	.25	.50	3.00	1500
L360TY	20.25	1.12	.69		1-1/2-12	3/8	1.25	10.88	.25	.50	3.00	1550

(1) "BD" varies ± .010
(2) "AL" varies + .005, −.000
(3) "U" varies up to 1.6250 dia. +.000, −.005
1.6250 dia. and larger +.000, −.001
(4) "XR" tap depth on 140TY is .88, on 180TY thru 250TY is 1.38
(5) Standard lead wire length is 25 feet – other lengths available if specified on sales order.
(6) "AK" varies +.000, −.002
(7) Minimum submerged depth
(8) Protective conduit furnished by customer if required.
(9) Dimension not applicable to this frame.

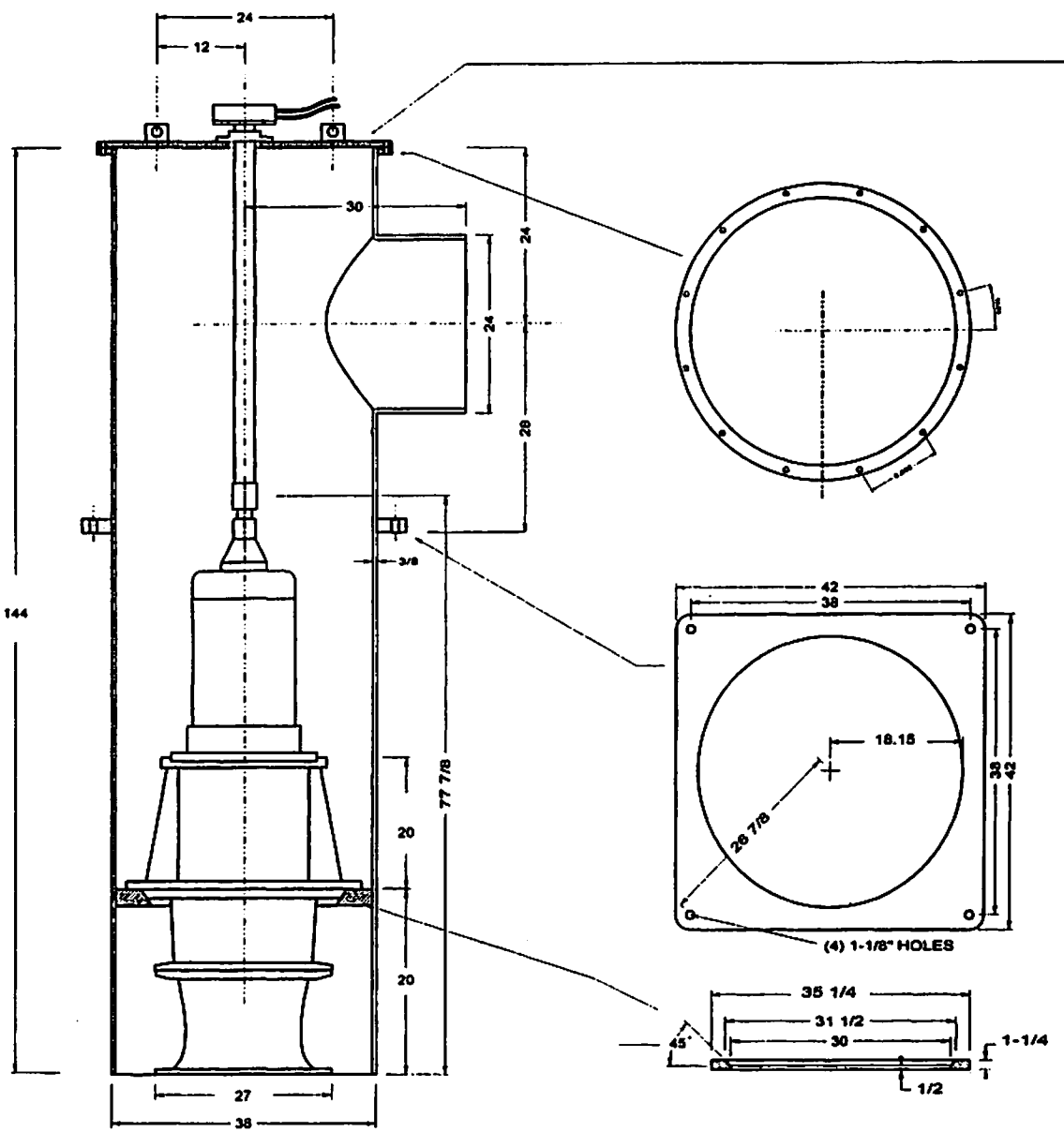

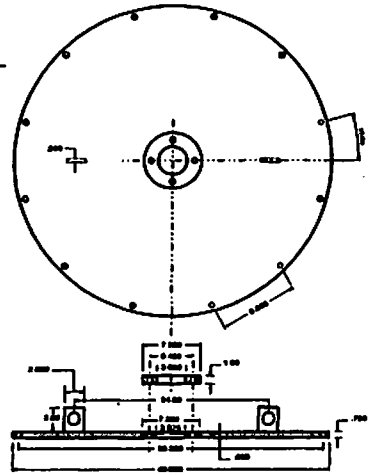

TYPICAL PUMP MOUNTING

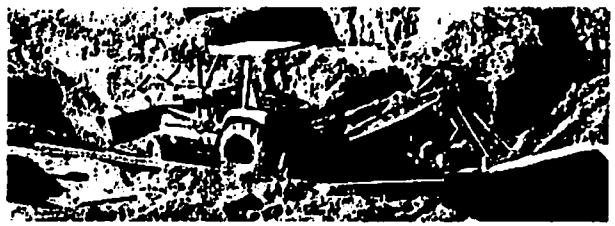

ANDERSON PUMP COMPANY 24719 W. ROBERTSON BLVD CHOWCHILLA, CALIFORNIA 93610	DATE: 08-05-98
REVISED:	CANNED PUMP TYPICAL
REVISED:	
DRAWING FILE NO: TYPICAL	DWG BY: DOUGHERTY
PREPARED BY: Anderson Pump Company Inc.	REF: MCKINZIE

Exhibit I
Sheet 80 of 85

PRIME PUMP

PRIME PUMP, INC.
VERTICAL MIXED FLOW PUMPS
Rating Curves

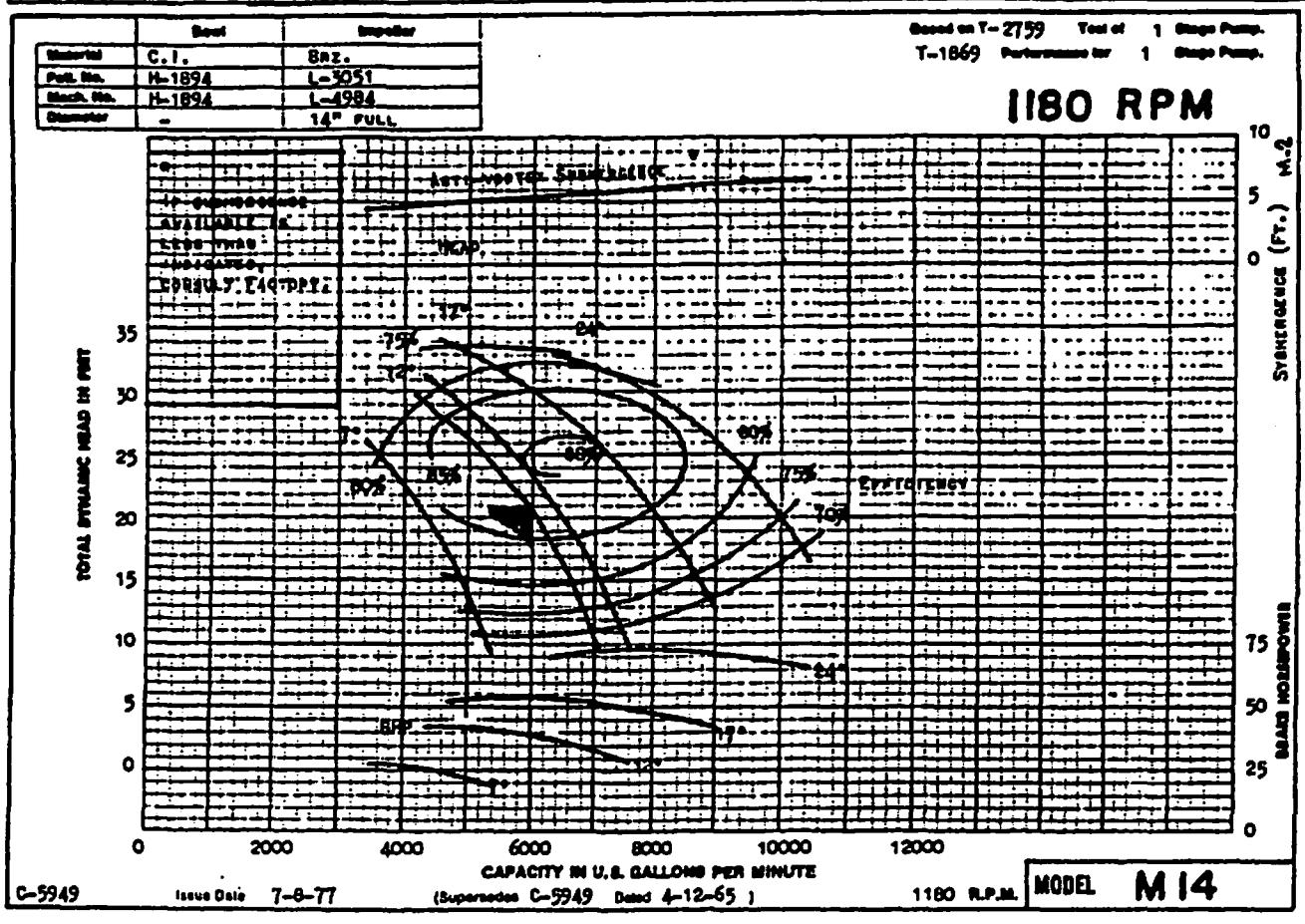

6000 GPM @ 21'
Reliance 1200 RPM Sub. Motor

Exhibit I
Pumps
Pump Panels

Class 8940

Class 8940 Type NS panels in NEMA 3R enclosures are specifically designed for pumping applications. Extra space is provided for field installation of auxiliary equipment.

- Type S Contactor provided as standard
- Approved for Submersible Pump Applications
- Class 10 Overload Relay
- All Prices Include a "START" Push Button and a "HAND-OFF-AUTO" Selector Switch.

3-Pole Polyphase — 600 Volts AC Maximum — 50-60 Hertz

Volts	Max. HP Polyphase	Coil Voltage●	Fuse Clip Amps▲	Type	Price■
240	3	240-60 220-50	30	NSC2003V03	$ 844.
	5		30	NSC2005V03	844.
	7½		30	NSC2007V03	844.
	10		60	NSC2010V03	951.
	15		60	NSD2015V03	1138.
	20		100	NSD2020V03	1626.
	25		100	NSE2025V03	1837.
	30		100	NSE2030V03	1837.
	40		200	NSE2040V03	3123.
	50		200	NSF2050V03	3379.
	75		LAL36250•	XSG2075V03	8379.
	100		400	NSG2100V03	6861.
	100		LAL36350•	XSG2100V03	8379.
	200		MAL36700•	XSH2200V03	18171.
	250		MAL36800•	XSJ2250V03	24495.
	300		MAL361000•	XSJ2300V03	24495.
480	3	480-60 440-50	30	NSC4003V06	844.
	5		30	NSC4005V06	844.
	7½		30	NSC4007V06	844.
	10		30	NSC4010V06	844.
	15		30	NSC4015V06	951.
	20		60	NSD4020V06	1138.
	25		60	NSD4025V06	1138.
	30		60	NSD4030V06	1626.
	40		100	NSE4040V06	1837.
	50		100	NSE4050V06	1837.
	60		100	NSE4060V06	2989.
	75		200	NSE4075V06	3123.
	100		200	NSF4100V06	3379.
	150		LAL36250•	XSG4150V06	8379.
	200		400	NSG4200V06	6861.
	200		LAL36350•	XSG4200V06	8379.
	300		MAL36500•	XSH4300V06	18171.
	350		MAL36600•	XSH4350V06	18171.
	400		MAL36700•	XSH4400V06	18171.
	500		MAL36800•	XSJ4500V06	24495.
	600		MAL361000•	XSJ4600V06	24495.

• Circuit breaker disconnect supplied.
■ Type NSC, NSD, NSE and NSF panels include a three phase overload relay, and do not require thermal units. Types NSG, XSG and XSH panels include a three unit overload relay. Thermal units must be ordered separately at $9. list each.
▲ Fuse clips are sized for use with dual-element time-delay fuses.

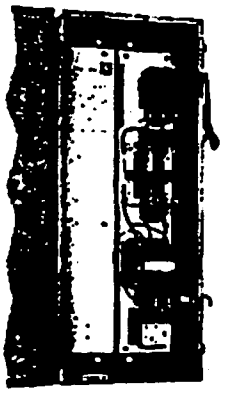

Type NSD4030

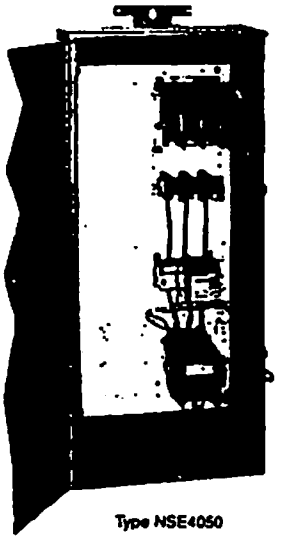

Type NSE4050

● Voltage code must be specified to order this product. Refer to standard voltage codes listed below and insert as shown in the HOW TO ORDER block.

Coil Voltage Codes

Voltage 60 HZ	Voltage 50 HZ	Code	Price Adder
24	...	V01★	N.C.
120	110	V02	N.C.
208	...	V06	N.C.
240	220	V03	N.C.
...	380	V05	N.C.
480	440	V06	N.C.
600	550	V07	N.C.
Specify	Specify	V99	$15.

★ 24V coils are not available on NSF, NSG, XSG, XSH and XSJ devices. Where 24V coils are available, Form S (separate control) must be specified.

How To Order:

To Order Specify:	Catalog Number			
	Class	Type	Coil Voltage Code	Form(s)
● Class Number ● Type Number ● Coil Voltage Code ● Form(s) see pg. 11-117	8940	NSC2010	V03	KY1532

Factory Modifications (Forms) . . . . . Page 11-117
Dimensions . . . . . Pages 11-119 – 11-121
Replacement Parts (Class 9998) . . . . . Pages 16-2 – 16-6
Type S Accessories (Class 9999) . . . . . Pages 16-10 – 16-15

WELL-GUARD is a Registered Trademark of Square D Company.

Class 8940 "S2" Pumping Plant Panels in NEMA 3R enclosures are specifically designed for oil field applications. All panels are supplied w. MAG-GARD® circuit breaker or visible blade, fused, disconnect switch. This line of pumping plant panels features:

- Rugged spring latches for easy access without a tool
- Side mounted control units for convenient operation
- Door retainer for windy areas
- Price includes "Hand-Off-Auto" selector switch
- UL listed for use as Service Equipment for Motors
- Extra panel space for additional electrical controls
- All devices are UL listed and marked — "SUITABLE ONLY FOR USE AS SERVICE EQUIPMENT."

Disconnect Switch Type

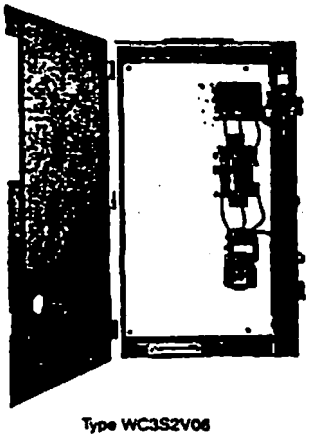

Type WC3S2V06

NOTE: All devices are UL listed and marked – "SUITABLE ONLY FOR USE AS SERVICE EQUIPMENT."

600 Volts Max.				3 Pole					50—60 Hertz
				Fusible Disconnect Type			Circuit Breaker Type		
Volts	Max. H.P. Polyphase	Coils Voltage	NEMA Size	Fuse Clip Amps.	Type	Price	Frame Size	Type	Price
240	7.5	240-60 220-50	1▼	30	WC1S2V03	$888.	FAL36030 15M	XC1S2V03	$936.
	10		2▼	60	WD1K2V03	1213.	FAL36050 16M	XD1S2V03	1263.
	15						FAL36100 18M	XDS2V03	1263.
	30		3•	100	WE1S2V03	1958.	FAL36100 18M	XE1S2V03	2058.
	40		4•	200	WF3S2V03	3673.	KAL36250 26M	XF1S2V03	3775.
	50						KAL36250 29M	XF2S2V03	3775.
480	7.5	480-60 440-50	1▼	30	WC3S2V06	903.	FAL36015 13M	XC3S2V06	953.
	10						FAL36030 15M	XC4S2V06	953.
	15		2▼	60	WD3S2V06	1229.	FAL36030 15M	XD3S2V06	1279.
	25		2▼				FAL36050 16M	XD4S2V06	1279.
	50		3•	100	WE3S2V06	2000.	FAL36100 18M	XE3S2V06	2100.
	75		4•	200	WF3S2V06	3707.	KAL36250 25M	XF3S2V06	3807.
	100						KAL36250 29M	XF4S2V06	3807.

▼ Overload relays are ambient temperature compensated.
† Overload relays are non-ambient temperature compensated.
■ Thermal units must be ordered separately at $9. list each.
▲ Fuse clips are sized for use with dual-element time-delay fuses.

Circuit Breaker Type

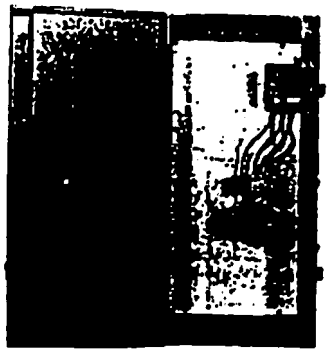

Type XE3S2V02B12S

Factory Modifications

Description	Form Letter	Price
Lightning Arrestor	Y1532	$ 240.
Time Delay Upon De-Energization	K	468.
Time Delay Upon Energization	K15	468.
Program Timer with Day Omission Feature	K141	504.
Undervoltage Relay (Requires use of Form S or Form FT.)	Y447•	405.
Elapsed Time Meter	G97	348.
Running Open Phase and Phase Sequence Reversal Protection	Y444	1058.
Auxiliary Contacts (Specify N.O. or N.C.)	X②	66.
Pilot Light (specify lens color) Does not include Auxiliary Contact.	P†	90.
Control Transformer with Fused Primary: Types: NPD, NPE, NPF, WC, XC, NSC (50VA) NPG, NSG, XD, WD (100VA) NPJ, NSE, XE, WE (150VA) NSF, XF, WF (300VA) NSG, XSG (50VA and an interposing control relay)	F4T	162. 228. 336. 468. 462.
Separate Control	S	N.C.
Substitute Standard Trip Melting Alloy Overload Relays (Type "S2" only)	Y61	N.C.
Substitute Quick-Trip Melting Alloy Overload Relay (Type "S2" only)	Y611	N.C.
Substitute Class 10 IEC Overload Relay	B12	N.C.

• Requires the use of 120V control (form S or F4T).
† Indicate Pilot light color as Form P1 (red) or Form P2 (green). See page 11-144 footnote ③ form more selections.
② To determine the maximum number of auxiliary contacts which can be added to each Type S device and for the appropriate "X Form," refer to tables in the Class 8536 section.

Coil Voltage Codes

Voltage 60 HZ	Voltage 50 HZ	Code	Price Adder ▼
24	...	V01†*	N.C.
120	110	V02†	N.C.
208	...	V08	N.C.
240	220	V03	N.C.
...	380	V05	N.C.
480	440	V06	N.C.
600	550	V07	N.C.
Specify	Specify	V99	$15.

† These voltages must include Form S (Supplied at no charge).
* 24V coils are not available on Size 4 starters. On Size 1-3, 24V coils are available. Form S must be used.

How To Order:

To Order Specify:	Catalog Number			
• Class Number • Type Number • Coil Voltage Code • Form(s) see pg. 11-117	Class	Type	Coil Voltage Code	Form(s)
	8940	XD3S2	V02	B12S

WELL-GUARD and MAG-GARD are Registered Trademarks of Square D Company.

Class 8940

CLass 8940 Reduced Voltage panels in NEMA 3R enclosures are specifically designed for pumping applications. Extra space is provided for fie installation of auxiliary equipment.

- Type S contactors/starters provided as standard.
- All devices are UL listed and marked – "SUITABLE ONLY FOR USE AS SERVICE EQUIPMENT."
- Price includes "Hand-Off-Auto" and "Start" pushbutton.

Thermal Units — Prices shown do not include thermal units. Devices require 3 thermal units (Sizes 2-6), standard trip thermal units are $9. each. See pages 16-16 – 16-36 for selection charts.

Closed Transition Autotransformer Type

3—Pole Polyphase — 600 Volts AC Maximum — 50—60 Hertz

Motor (Starter) Volts	Max. HP Polyphase	Coil Voltage●	NEMA Size	Fusible Disconnect Type: Fuse Clip Amps. ▲	Type	Price	Circuit Breaker Type: Circuit Breaker	Type	Price
230 (240)	15	240-60 220-50	2▼	60	RD4 V03	$ 5025.	FAL	VD1 V03	$ 5025.
	25		3	100	RE4 V03	7185.	FAL	VE1 V03	7185.
	30			200	RE1 V03	7305.	KAL	VE2 V03	7305.
	50		4	200	RF4 V03	11229.	KAL	VF1 V03	11841.
	75		5▼	400	RG1 V03	16513.	LAL	VG2 V03	16513.
	100			400	RG1 V03	19413.	LAL	VG2 V03	19413.
460 (480)	25	480-60 440-50	2▼	60	RD2 V06	5289.	FAL	VD1 V06	5289.
	30		3	100	RE2 V06	7197.	FAL	VE1 V06	7197.
	50			100	RE2 V06	7665.	FAL	VE1 V06	7665.
	75		4	200	RF2 V06	11229.	KAL	VF1 V06	11841.
	100			200	RF2 V06	11913.	KAL	VF1 V06	11913.
	150		5▼	400	RG3 V06	18003.	LAL	VG4 V06	19521.
	200			400	RG3 V06	20583.	LAL	VG4 V06	21585.
	300		6▼	.....	.....	.....	MAL	VH1 V06	33423.
	400			.....	.....	.....	MAL	VH2 V06	33423.
	600		7▼	.....	.....	.....	MAL	VJ1 V06	51873.

Type VG4V06K15

Thermal Units — Prices shown do not include thermal units. Devices require 6 thermal units (Sizes 2-6), standard trip thermal units are $9. each. See pages 16-16 – 16- 36 for selection charts.

Part Winding Type

3—Pole Polyphase — 600 Volts AC Maximum — 50—60 Hertz

Motor (Starter) Volts	Max. HP Polyphase	Coil Voltage●	NEMA Size	Combination Fusible Disconnect Type: Fuse Clip (2 Sets) Amps. ▲	Type	Price	Combination Circuit Breaker Type: Circuit Breaker (2 Blks.) Frame Size	Type	Price
230 (240)	25	240-60 220-50	2PW▼	60	MD4 V03	$ 3174.	FAL	PD1 V03	$ 3072.
	30		3PW	60	ME5 V03	4890.	FAL	PE3 V03	4770.
	50			100	ME6 V03	4890.	FAL	PE3 V03	4770.
	75		4PW	200	MF1 V03	9192.	KAL	PF3 V03	9858.
	100		5PW▼	200	MG3 V03	18252.	KAL	PG2 V03	18252.
	125			400	MG1 V03	18252.	LAL	PG3 V03	18252.
	150			400	MG1 V03	18252.	LAL	PG3 V03	18252.
460 (480)	30	480-60 440-50	2PW▼	30	MD5 V06	3174.	FAL	PD1 V06	3072.
	40			60	MD2 V06	3174.	FAL	PD1 V06	3072.
	60		3PW	60	ME7 V06	4890.	FAL	PE3 V06	4770.
	75			100	ME3 V06	4890.	FAL	PE3 V06	4770.
	100		4PW	200	MF3 V06	9858.	FAL	PF2 V06	9858.
	150			200	MF3 V06	9858.	KAL	PF3 V06	9858.
	200		5PW▼	200	MG4 V06	18252.	KAL	PG2 V06	18252.
	250			200	MG4 V06	18252.	LAL	PG3 V06	18252.
	350			400	MG2 V06	18252.	LAL	PG3 V06	18252.

▲ Fuse clips are sized for use with dual-element time-delay fuses.
▼ Overload relays are ambient temperature compensated.

● Voltage code must be specified to order this product. Refer to standard voltage codes listed below and insert as shown in the HOW TO ORDER block.

Coil Voltage Codes

Voltage: 60 HZ	Voltage: 50 HZ	Code	Price Adder
24	...	V01†★	$0.
120	110	V02†	$0.
208	...	V08	$0.
240	220	V03	$0.
...	380	V05	$0.
480	440	V06	$0.
600	550	V07	$0.
Specify	Specify	V99	$15.

★ 24V coils are not available on Sizes 4-7. On Sizes 2-3, where 24V coils are available, Form S (separate control) must be specified.
† These voltage codes must include Form S (No additional charge).

How To Order:

To Order Specify:	Catalog Number: Class	Type	Coil Voltage Code	Form(s)
● Class Number ● Type Number ● Coil Voltage Code ● Form(s) see pg. 11-117	8940	VG4	V06	K15

Factory Modifications (Forms) ..... Page 11-117
Dimensions ..... Pages 11-119 – 11-121
Replacement Parts (Class 9998) ..... Pages 16-2 – 16-6
Type S Accessories (Class 9999) ..... Pages 16-10 – 16-15

WELL-GUARD is a Registered Trademark of Square D Company.

Class 8940

Approximate Dimensions

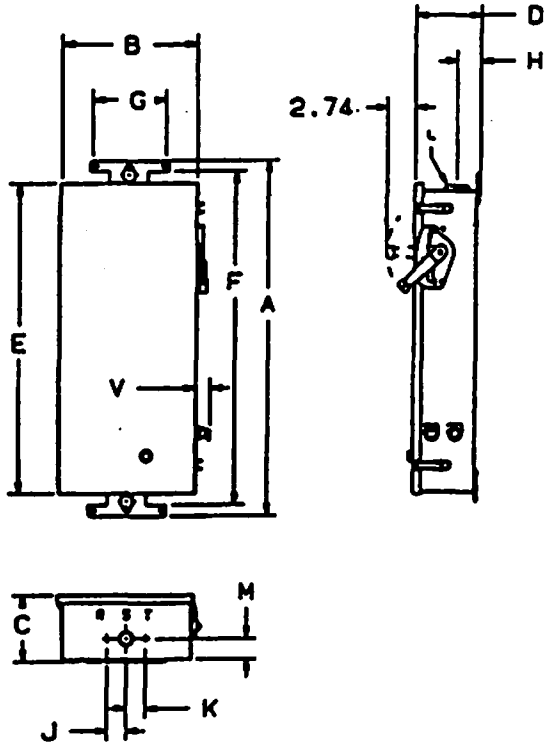

Figure 1

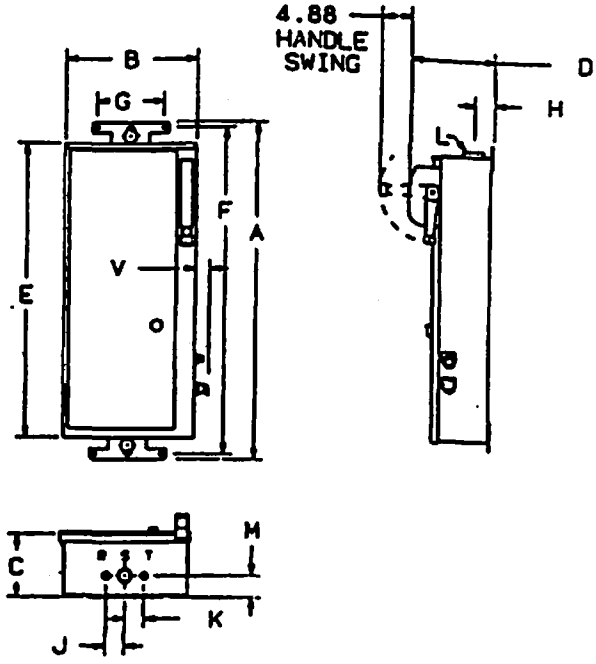

Figure 2

Approximate Dimensions

Type	Fig.	Dimensions	A	B	C	D	E	F	G	H	J	K	Cond. L	M	Knockouts R	Knockouts S	Knockouts T	V
NPD NPE NPF NSC NSD‡	1	IN	38.06	13.73	6.67	9.70	33.06	37.93	7.00	2.41	3.00	3.00	2½	2.41	½–¾	1⅛–1½	½–¾	1.41
		MM	992	349	169	246	839	963	178	61	76	76		61				36
NPG NPJ NSE NSF	2	IN	49	19.16	8.81	10.37	44.07	47.88	7.00	2.17	2.69	3.44	2½	2.57	½–¾	1–1¼ 1–2–½	1–1¼ 1½–2	1.41
		MM	1245	486	224	263	1119	1216	178	55	68	87		65				36

‡ NSD2020 supplied in Figure 2 enclosure.

WELL-GUARD is a Registered Trademark of Square D Company.

Exhibit I-1
Pumps
Electrical Schematics

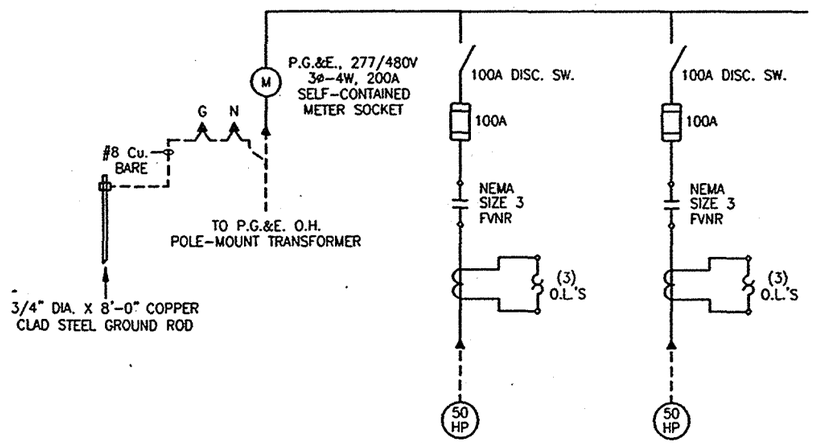

PUMP STATTION 8C ONE-LINE

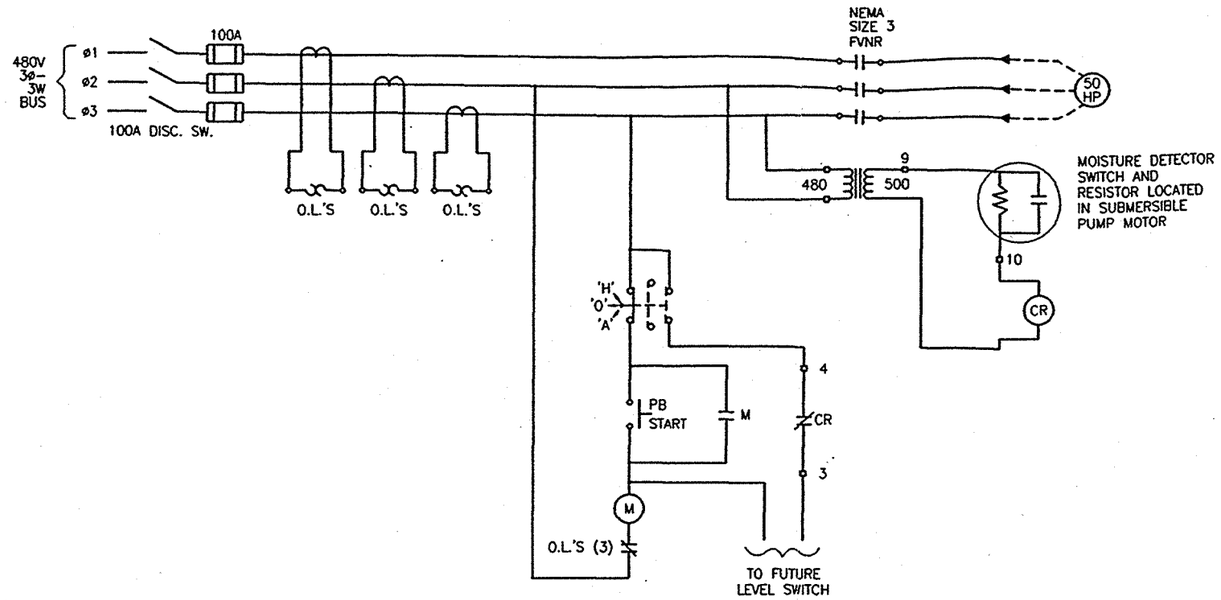

50 HP PUMP FULL VOLTAGE
START CONTROL SCHEMATIC
TYPICAL OF 3

D:\
9/8/99

DATE:	SEPTEMBER 1999
SCALE:	N.T.S.
DRAWN BY:	M. LARKIN
CHECKED BY:	M. BREGAR
PROJ. MGR.:	-
PROJ. ENGR.:	M. BREGAR

NO.	BY	DATE	REVISIONS
6			
5			
4			
3			
2			
1	M.L.	9/99	SURVEYED AS BUILTS

EETS INC.
engineers-technicians
10725 fair oaks blvd. suite b
fair oaks, ca. 95628 (916)965-1312

YOLO BASIN
WETLANDS

PUMP STATION 8NE (NORTHEAST UNIT)
ONE-LINE & ELECTRICAL SCHEMATIC

JOB NO.
99120

SHEET
Exhibit I
Sheet 1 c

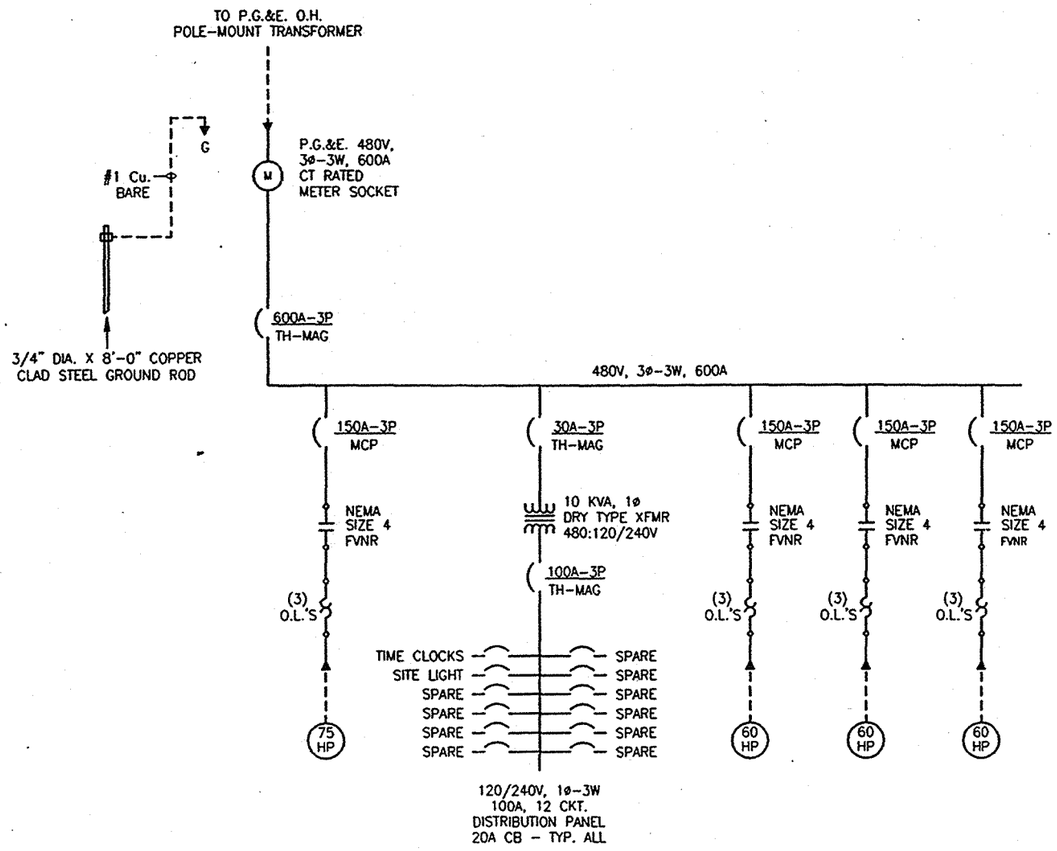

PUMP STATION 1A ONE-LINE

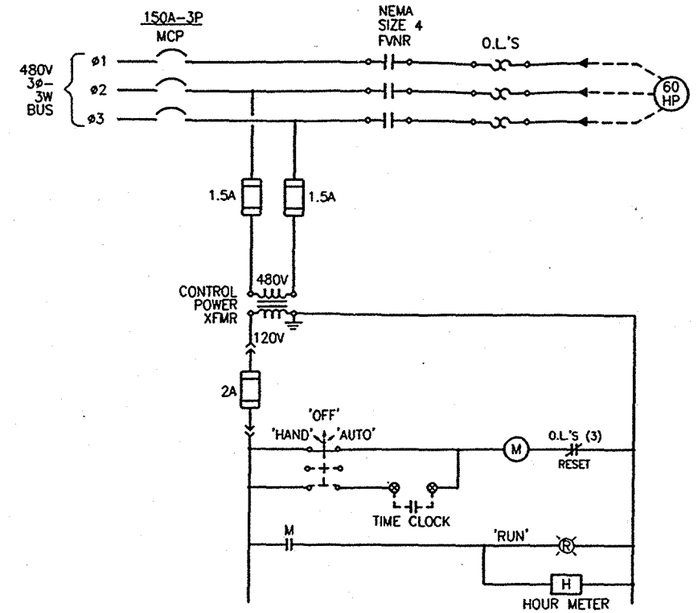

60 HP PUMP FULL VOLTAGE
START CONTROL SCHEMATIC
(TYPICAL OF 3)

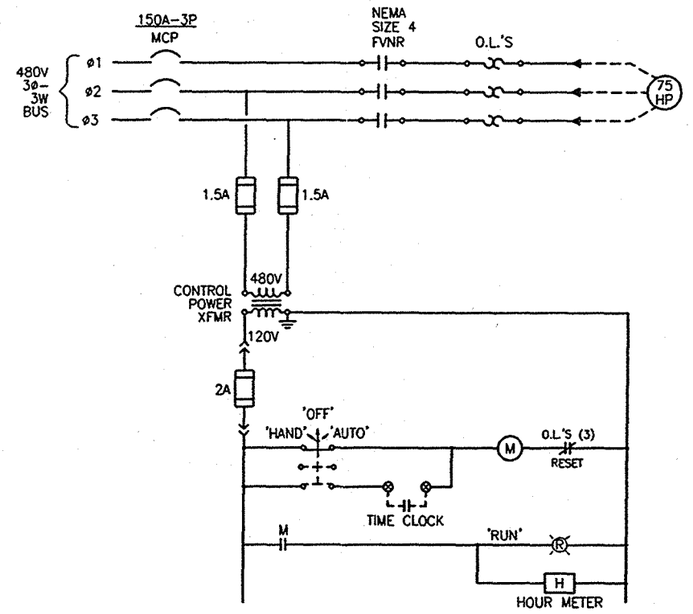

75 HP PUMP FULL VOLTAGE
START CONTROL SCHEMATIC

DATE:	SEPTEMBER 1999
SCALE:	N.T.S.
DRAWN BY:	M. LARKIN
CHECKED BY:	M. BREGAR
PROJ. MGR.:	-
PROJ. ENGR.:	M. BREGAR

NO.	BY	DATE	REVISIONS
6			
5			
4			
3			
2			
1	M.L.	9/99	SURVEYED AS BUILTS

EETS engineers-technicians INC.
10725 fair oaks blvd. suite b
fair oaks, ca. 95628 (916)965-1312

YOLO BASIN
WETLANDS

PUMP STATION 1A (CENTRAL UNIT)
ONE-LINE & ELECTRICAL SCHEMATIC

JOB NO.
99120

SHEET
Exhibit I-1
Sheet 2 of 5

D:\
9/8/99

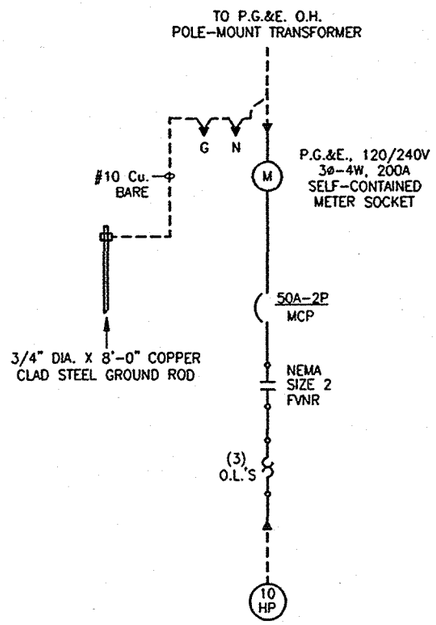

PUMP STATION 2N ONE-LINE

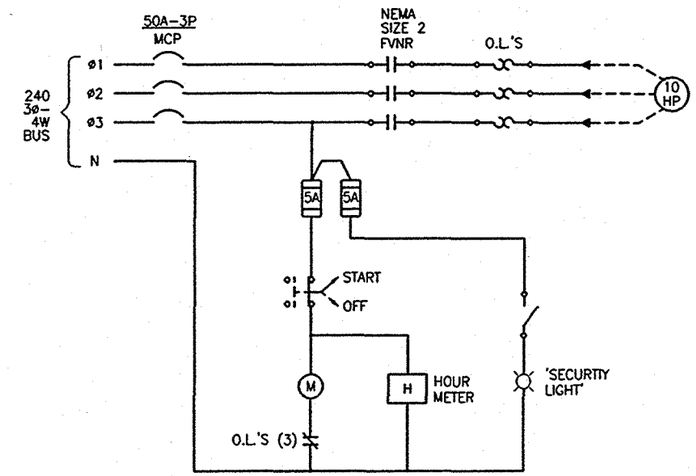

10 HP PUMP FULL VOLTAGE
START CONTROL SCHEMATIC

DATE:	SEPTEMBER 1999
SCALE:	N.T.S.
DRAWN BY:	M. LARKIN
CHECKED BY:	M. BREGAR
PROJ. MGR.:	-
PROJ. ENGR.:	M. BREGAR

NO.	BY	DATE	REVISIONS
6			
5			
4			
3			
2			
1	M.L.	9/99	SURVEYED AS BUILTS

EETS INC.
engineers-technicians
10725 fair oaks blvd. suite b
fair oaks, ca. 95628 (916)965-1312

YOLO BASIN
WETLANDS

PUMP STATION 2N (NORTH UNIT)
ONE-LINE & ELECTRICAL SCHEMATIC

JOB NO.
99120

SHEET
Exhibit I-1
Sheet 3 of 5

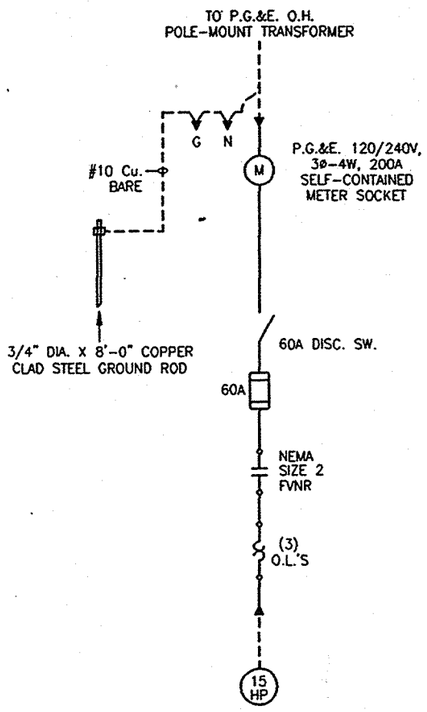

PUMP STATION 2W ONE-LINE

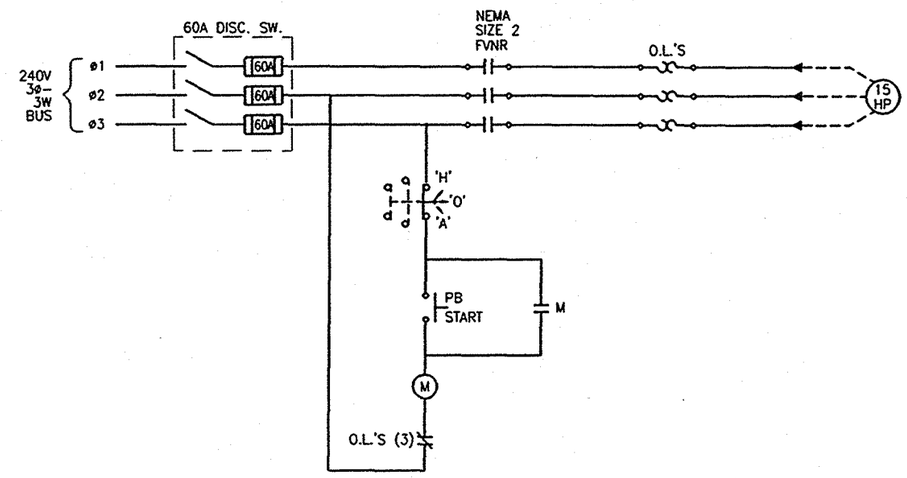

15 HP PUMP FULL VOLTAGE
START CONTROL SCHEMATIC

DATE: SEPTEMBER 1999	6			
SCALE: N.T.S.	5			
DRAWN BY: M. LARKIN	4			
CHECKED BY: M. BREGAR	3			
PROJ. MGR.: -	2			
PROJ. ENGR.: M. BREGAR	1	M.L.	9/99	SURVEYED AS BUILTS
	NO.	BY	DATE	REVISIONS

EETS INC.
engineers-technicians
10725 fair oaks blvd. suite b
fair oaks, ca. 95628 (916)965-1312

YOLO BASIN
WETLANDS

PUMP STATION 2W (WEST UNIT)
ONE-LINE & ELECTRICAL SCHEMATIC

JOB NO.
99120

SHEET
Exhibit I-1
Sheet 4 of 5

D:\
9/8/99

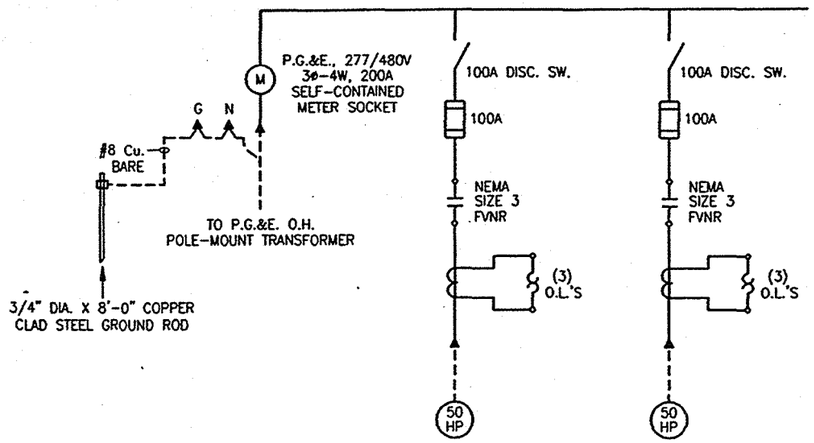

PUMP STATTION 8C ONE-LINE

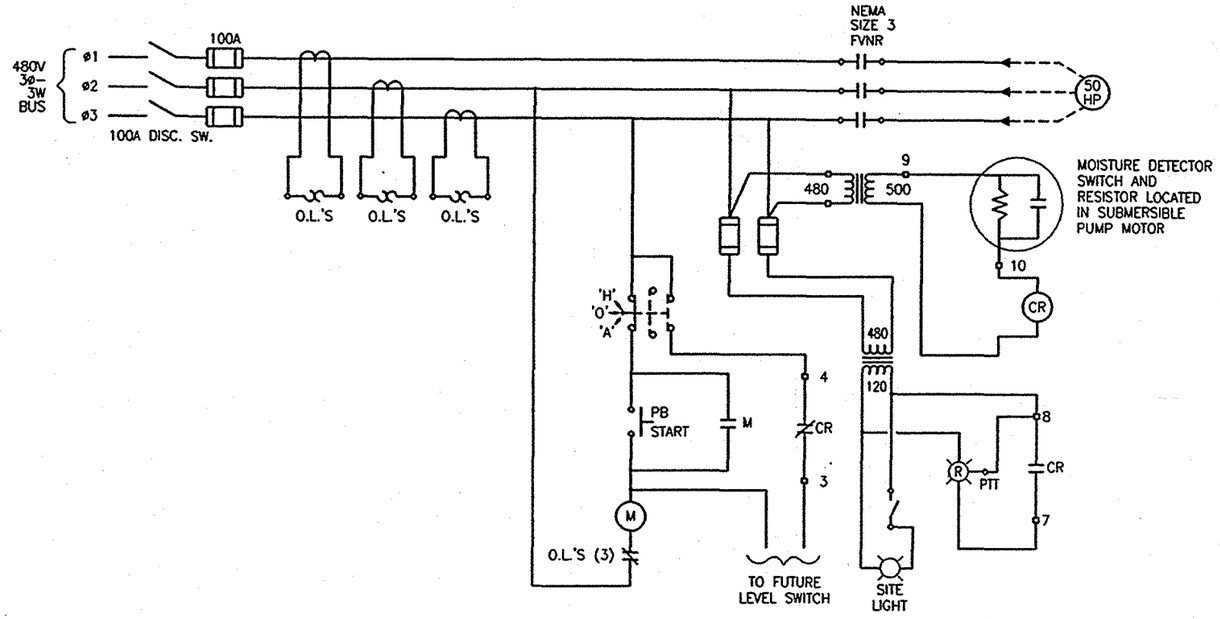

50 HP PUMP #1 FULL VOLTAGE
START CONTROL SCHEMATIC

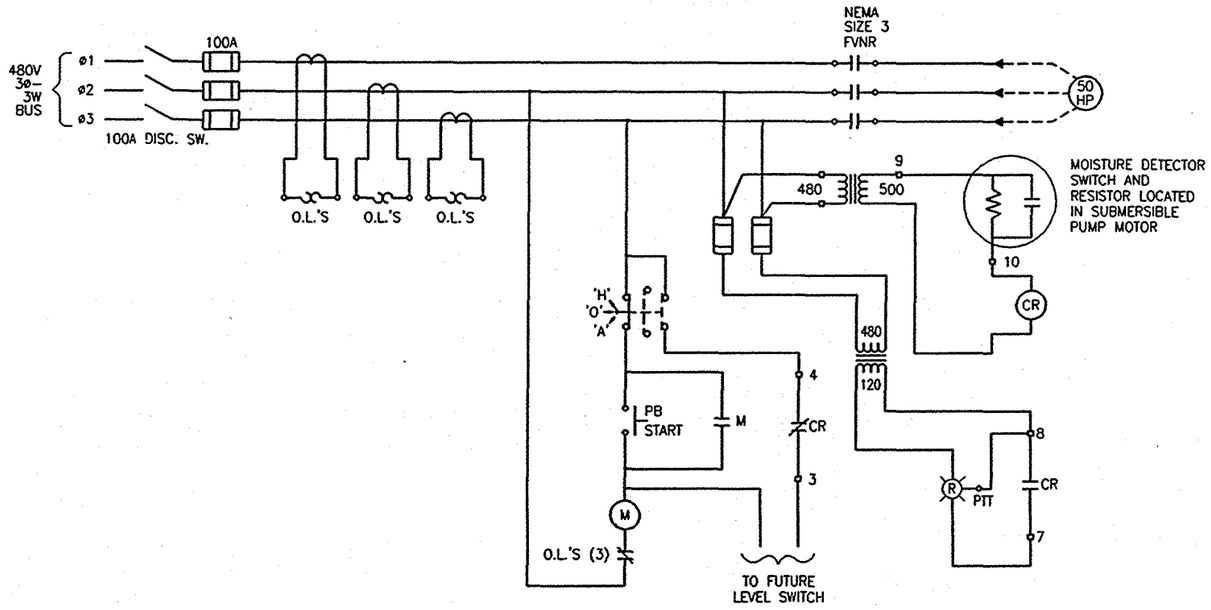

50 HP PUMP #2 FULL VOLTAGE
START CONTROL SCHEMATIC

D:\

9/8/99

DATE:	SEPTEMBER 1999
SCALE:	N.T.S.
DRAWN BY:	M. LARKIN
CHECKED BY:	M. BREGAR
PROJ. MGR.:	.
PROJ. ENGR.:	M. BREGAR

NO.	BY	DATE	REVISIONS
6			
5			
4			
3			
2			
1	M.L.	9/99	SURVEYED AS BUILTS

EETS INC.
engineers-technicians
10725 fair oaks blvd. suite b
fair oaks, ca. 95628 (916)965-1312

YOLO BASIN
WETLANDS

PUMP STATION 8C (SOUTH UNIT)
ONE-LINE & ELECTRICAL SCHEMATIC

JOB NO.
99120

SHEET
Exhibit I-1
Sheet 5 of 5

Exhibit I-2
Owner's Manual Portable Davit Cranes

THERN INCORPORATED

Read this Owner's Manual thoroughly before operating the equipment. Keep it with the equipment at all times. Replacements are available from Thern, Inc., PO Box 347, Winona, MN 55987, 507-454-2996.

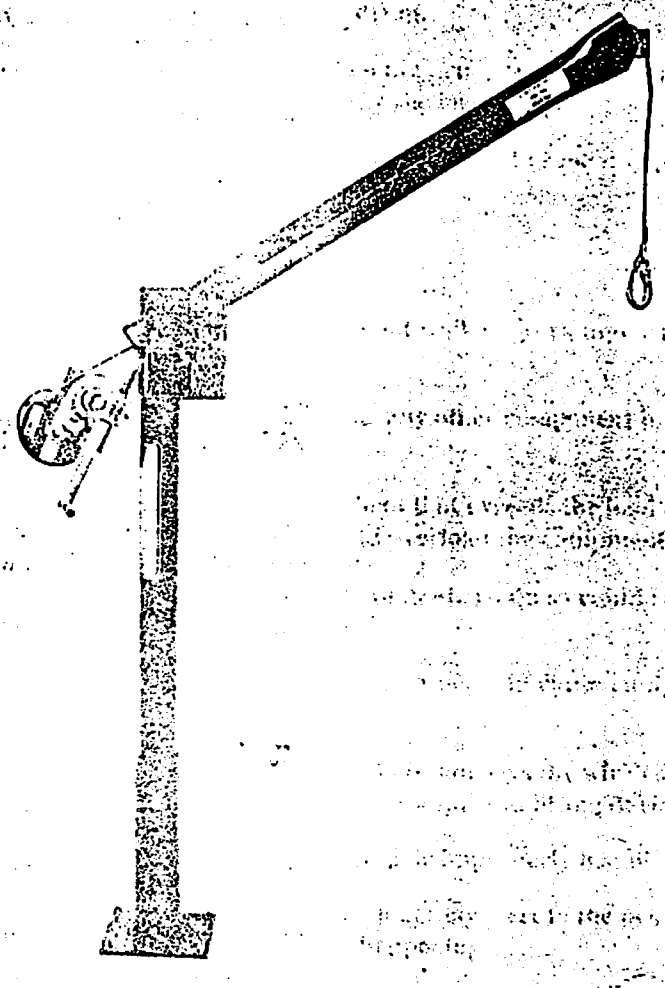

Owner's Manual

For The Model 5122M1 and 5122M1SS Portable Davit Cranes

A6110-D1373C-0995

Exhibit I-2
Sheet 1 of 18

Two-Year Limited Warranty

Thern, Inc. warrants its products against defects in material or workmanship for two years from the date of purchase by the original using buyer, or if this date cannot be established, the date the product was sold by Thern, Inc. to the dealer. To make a claim under this warranty, the product must be returned, prepaid, directly to Thern, Inc., 5712 Industrial Park Road, Winona, Minnesota 55987. The following information must accompany the product: the date of purchase, the description of the claimed defect, and a complete explanation of the circumstances involved. If the product is found to be defective, it will be repaired or replaced free of charge, and Thern, Inc. will reimburse the shipping cost.

This warranty does not cover any damage due to accident, misuse, abuse, or negligence. Any alteration, repair or modification of the product outside the Thern, Inc. factory shall void this warranty. This warranty does not cover any costs for removal of our product, downtime, or any other incidental or consequential costs or damages resulting from the claimed defects. This warranty does not cover brake discs, as these are wear components and their life is subject to use conditions which vary between applications.

FACTORY AUTHORIZED REPAIR OR REPLACEMENT AS PROVIDED UNDER THIS WARRANTY IS THE EXCLUSIVE REMEDY TO THE CONSUMER. THERN, INC. SHALL NOT BE LIABLE FOR ANY INCIDENTAL OR CONSEQUENTIAL DAMAGES FOR BREACH OF ANY EXPRESS OR IMPLIED WARRANTY ON THIS PRODUCT. EXCEPT TO THE EXTENT PROHIBITED BY APPLICABLE LAW, ANY IMPLIED WARRANTY OF MERCHANTABILITY OR FITNESS FOR A PARTICULAR PURPOSE ON THIS PRODUCT IS LIMITED IN DURATION TO THE DURATION OF THIS WARRANTY.

Some states do not allow the exclusion or limitation of incidental or consequential damages, or allow limitations on how long an implied warranty lasts, so the above limitation or exclusion may not apply to you. This warranty gives you specific legal rights, and you may also have other rights which vary from state to state.

Note: Thern, Inc. reserves the right to change the design or discontinue the production of any product without prior notice.

About This Manual

The Occupational Safety and Health Act of 1970 states that it is the employer's responsibility to provide a workplace free of hazard. To this end, all equipment should be installed, operated, and maintained in compliance with applicable trade, industrial, federal, state, and local regulations. It is the equipment owner's responsibility to obtain copies of these regulations and to determine the suitability of the equipment to its intended use.

This Owner's Manual, and warning labels attached to the equipment, are to serve as guidelines for hazard-free installation, operation, and maintenance. They should not be understood to prepare you for every possible situation.

The information contained in this manual is applicable only to the Thern Model 5122M1 and 5122M1SS Portable Davit Cranes. Do not use this manual as a source of information for any other equipment.

The following symbols are used for emphasis throughout this manual:

⚠WARNING

Failure to follow 'WARNING!' instructions may result in equipment damage, property damage, and/or serious personal injury.

⚠CAUTION

Failure to follow 'CAUTION!' instructions may result in equipment damage, property damage, and/or minor personal injury.

Important!

Failure to follow 'important!' instructions may result in poor performance of the equipment.

Suggestions for Safe Operation

⚠WARNING

DO the following:

Read and comply with the guidelines set forth in this Owner's Manual. Keep this manual, and all labels attached to the crane, readable and with the equipment at all times. Contact Thern, Inc. for replacements.

Check lubrication before use.

Install the wire rope securely to the winch drum.

Keep at least 4 wraps of wire rope wound on the drum at all times, to serve as anchor wraps. Failure to do so could cause the load to fall.

Keep hands away from sheaves, gears, wire rope, and other moving parts of the equipment.

DO NOT do the following:

Do not lift people, or things over people. Do not walk or work under a load or in the line of force of any load.

Do not exceed the load rating of the crane or any other component in the system.

Do not use more than one crane to move a load that exceeds the load rating of a single crane. A shift in load weight could overload the equipment.

Do not use damaged or malfunctioning equipment. To do so could result in failure of the equipment.

Do not modify the equipment in any way. To do so could cause equipment failure.

Do not wrap the wire rope around the load. This damages the wire rope and could cause the load to fall. Use a sling or other approved lifting device.

Do not operate the crane with guards removed or improperly installed.

Do not divert your attention from the operation. Stay alert to the possibility of accidents, and try to prevent them from happening.

Do not jerk or swing the load. Avoid shock loads by starting and stopping the load smoothly. Shock loads overload the equipment and may cause damage.

Do not use the crane to drag or pull loads. This will create side pulls which could damage the equipment or cause the load to tip.

Do not leave a suspended load unattended. Place the load on the ground if it must be left unattended.

1.1 Installing the Crane

Important!

- A qualified professional should inspect or design the foundation to insure that it will provide adequate support.
- Locate the crane so it will be visible during the entire operation.

⚠WARNING

Do not install the crane in an area defined as hazardous by the National Electric Code, unless installation in such an area has been thoroughly approved.

Do not install the crane near corrosive chemicals, flammable materials, explosives, or other elements that may damage the crane or injure the operator. Adequately protect the crane and the operator from such elements.

Position the crane so the operator can stand clear of the load, and out of the path of a broken wire rope that could snap back and cause injury.

Attach the crane to a rigid and level foundation that will support the crane and its load under all load conditions, including shock loading.

1.1.1 CONSULT APPLICABLE CODES AND REGULATIONS for specific rules on installing the equipment.

1.1.2 LOCATE THE CRANE in an area clear of traffic and obstacles that could interfere with operation. Make sure the crane is accessible for maintenance and operation.

1.1.3 INSTALL THE CRANE on a level surface. **An unlevel surface may cause the boom to swerve.**

1.1.4 FASTEN THE BASE securely to the foundation.

CONTACT A QUALIFIED PROFESSIONAL FOR MOUNTING INSTRUCTIONS.

Figure 1 – Installing the Crane

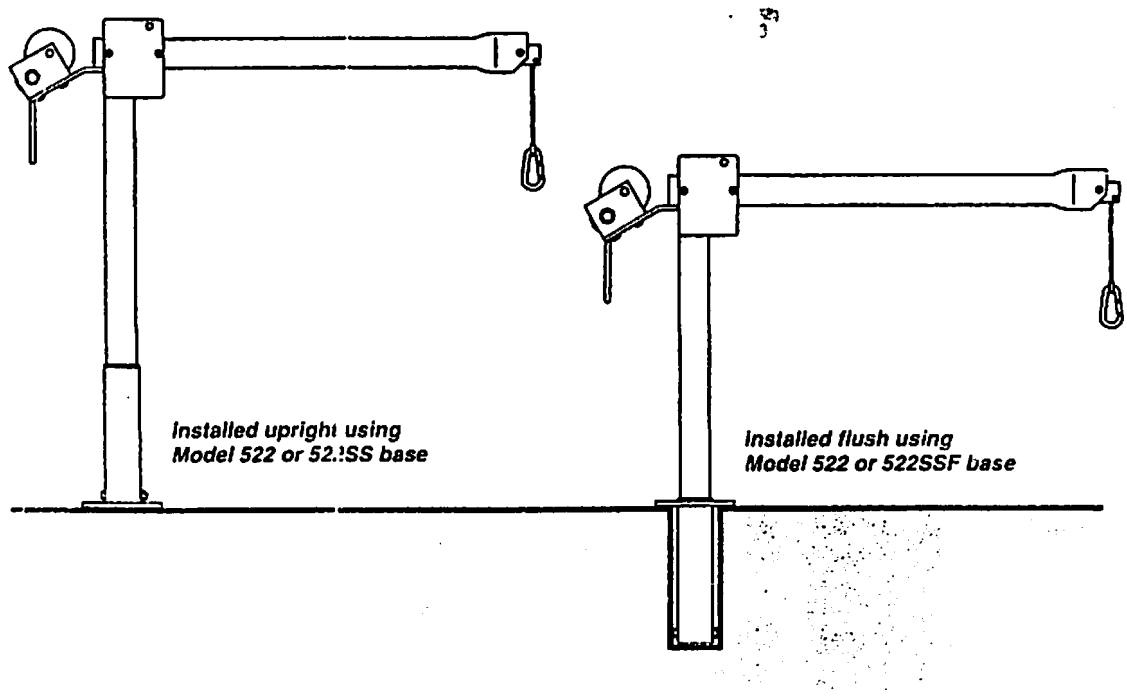

Exhibit I-2

1.2 Assembling the Crane

Important!

- Inspect the crane during assembly according to the Instructions for Periodic Inspection. This will give you a record of the condition of the crane with which to compare future inspections.
- Save all boxes and crates that the crane was shipped in, use them again if you need to repackage the crane.
- Contact the factory immediately if any parts are missing or damaged.
- Do not overtighten fasteners, this may strip threads or cause damage to other parts.

1.2.1 STUDY PARTS DRAWINGS to understand how the crane is assembled.

1.2.2 INSTALL THE MAST in the base.

a FOR MODEL 522 BASE, the mast should rest on the rollers installed in the lower set of holes in the base.

b FOR MODEL 514 BASE, secure the mast in place using the fasteners provided. **Make sure the capscrew passes through the mast to keep it from rotating in the base.**

1.2.3 INSTALL THE BOOM in the mast using the pins provided. **Do not rest the boom on top of the front pin, this may cause it to bend under load.**

1.2.4 INSTALL THE SHEAVE and cable guide in the end of the boom using the pin provided. **Make sure the cable guide is positioned correctly.**

1.2.5 INSTALL THE WINCH using the fasteners provided. **The winch can be positioned for either left or right hand operation. See figure 3.**

1.2.6 PASS THE WIRE ROPE over the sheave and through the boom. Anchor it to the drum according to instructions in the winch owners manual. **Make sure it passes under pins when running through the boom. See figure 3.**

1.2.7 COMPLETE ASSEMBLY.

a INSTALL THE WINCH HANDLE according to instructions in the Winch Owner's Manual.

b INSERT THE QUICK RELEASE PIN in the cable guide.

c MAKE SURE ALL FASTENERS are tightened, and cotter pins properly bent to secure them in place, see figure 2.

d LUBRICATE THE ENTIRE CRANE.

Figure 2 – Cotter Pins

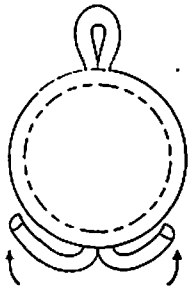

Figure 3 – Assembling the Crane

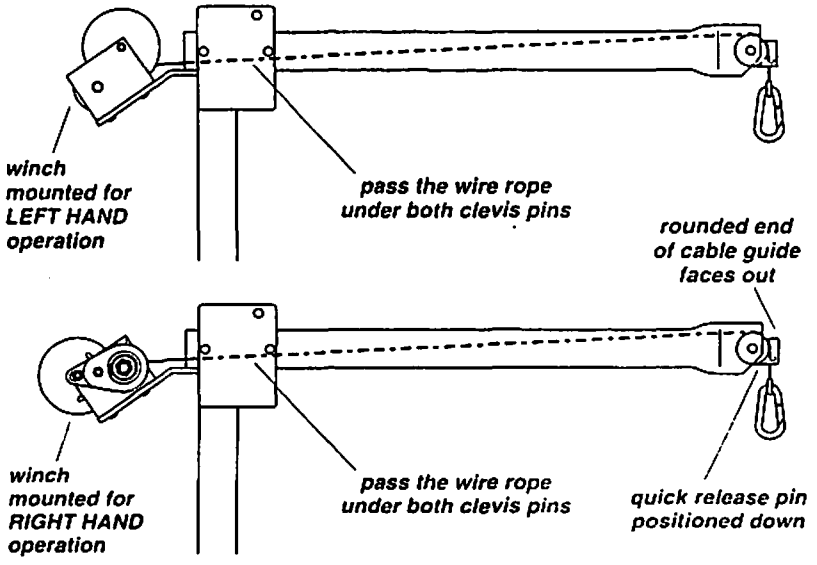

2.1 General Theory of Operation

Important!

- Limit nonuniform winding by keeping tension on the wire rope.
- It is your responsibility to detect and account for different factors affecting the condition and performance of the equipment.

2.1.1 THE PULL REQUIRED to move the load must not exceed the load rating of the crane. Consider the total force required to move the load, not the weight of the load.

2.1.2 THIS EQUIPMENT CAN develop forces that will exceed the load rating. It is the responsibility of the equipment user to limit the size of the load. Inspect the equipment regularly for damage according to the instructions contained in this manual.

2.1.3 PERFORMANCE RATINGS of the equipment are affected by the position of the boom, and the amount of wire rope you use.

a LOAD RATING represents the maximum pull that can be placed on new equipment. Load ratings are assigned values for specific wire rope lengths.

b LIFT varies with the position of the boom and the length of the wire rope.

c REACH varies with the position of the boom.

2.1.4 DUTY RATINGS refer to the type of use the equipment is subject to. Consider the following when determining duty rating.

a ENVIRONMENT: harsh environments include hot, cold, dirty, wet, corrosive, or explosive surroundings. **Protect the equipment from harsh environments when possible.**

b MAINTENANCE: poor maintenance, meaning poor cleaning, lubrication, or inspection, leads to poor operation and possible damage of the equipment. **Minimize poor maintenance by carefully following the instructions contained in this manual.**

c LOADING: severe loading includes shock loading and moving loads that exceed the load rating of the equipment. **Avoid shock loads, and do not exceed the load rating of the equipment.**

d FREQUENCY OF OPERATION: frequent or lengthy operations increase wear and shorten the life span of gears, bearings, sheaves, and other components. **Increase maintenance of the equipment if used in frequent operations.**

CONTACT THE FACTORY FOR MORE INFORMATION.

2.2 Suggestions for Safe Operation

⚠WARNING.

DO the following:

Keep at least 4 wraps of wire rope wound on the drum at all times, to serve as anchor wraps. With less than 4 wraps on the drum the wire rope could come loose, causing the load to fall.

Keep hands away from sheaves, gears, wire rope, and other moving parts of the equipment.

Keep all people, including operators and yourself, away from the crane. Keep out of the path of the load, and out of the path of a broken wire rope that might snap back and cause injury.

DO NOT do the following:

Do not lift people, or things over people. Do not walk or work under a load or in the line of force of any load.

Do not exceed the load rating of the crane or any other component in the system. To do so could result in failure of the equipment.

Do not use more than one crane to move a load that exceeds the load rating of a single crane. A shift in load weight could overload the equipment.

Do not use damaged or malfunctioning equipment. To do so could result in failure of the equipment.

Do not modify the equipment in any way. To do so could cause equipment failure.

Do not operate the crane with guards removed or improperly installed.

Do not divert your attention from the operation. Stay alert to the possibility of accidents, and try to prevent them from happening.

Do not jerk or swing the load. Avoid shock loads by starting and stopping the load smoothly. Shock loads overload the equipment and may cause damage.

Do not use the crane to drag or pull loads. This will create side pulls which could damage the equipment or cause the load to tip.

Do not leave a suspended load unattended. Place the load on the ground if it must be left unattended.

2.3 Preparing for Operation

Important!

- When determining whether the load will exceed the load rating, consider the total force required to move the load.

2.3.1 CONSIDER THE OPERATION. Do not begin until you are sure you can perform the entire operation without hazard.

2.3.2 INSPECT ALL COMPONENTS of the system.

a INSPECT THE CRANE and other equipment according to the Instructions for Frequent Inspection.

b INSPECT THE WINCH according to the instructions in the Winch Owner's Manual.

c OPERATORS must be in good health, alert, thoroughly trained in operating the equipment, and properly clothed (hard hat, safety shoes and safety glasses, no loose clothing).

d THE LOAD must be clear of other objects and free to move. Make sure the load will not tip, spin, roll away, or in any way move uncontrollably.

2.3.3 KNOW YOUR LOAD and make sure you do not exceed the load rating of the crane or any other equipment in the system.

2.3.4 POSITION THE BOOM so the load hook is centered over the load. **Avoid side pulls which could damage the crane or cause the load to tip. See figure 4.**

Figure 4 – Positioning the Boom

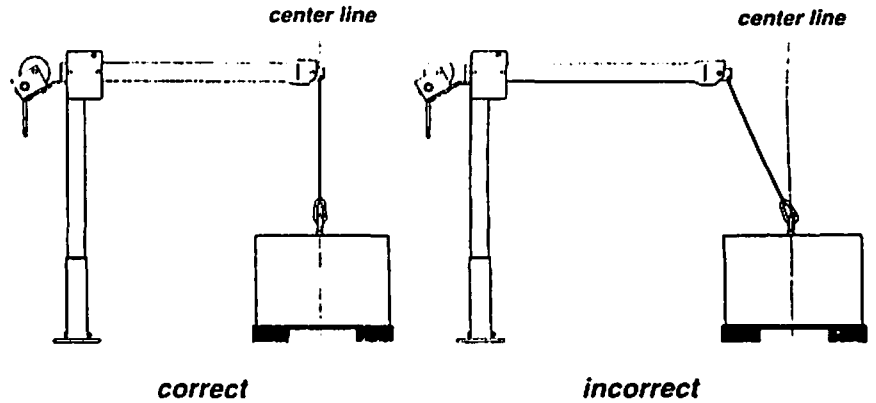

2.4 Attaching the Load

Figure 5 – Attaching Load

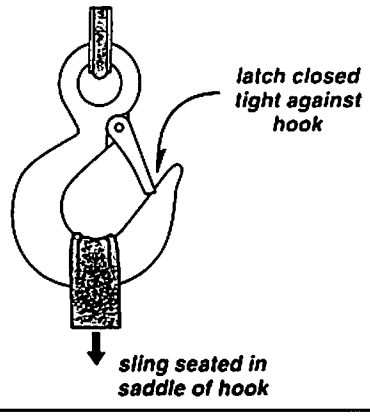

⚠WARNING

Do not wrap the wire rope around the load. This damages the wire rope and could cause the load to fall. Use a sling or other approved lifting device.

2.4.1 CLEAR OBJECTS from the path of the load so you can move it freely and observe it at all times during the operation.

2.4.2 MAKE SURE THE WIRE ROPE is not twisted. A twisted wire rope could cause the load to spin when it is raised off the ground.

2.4.3 ATTACH THE LOAD using a nylon sling, or other approved lifting device. Follow the recommendations of the sling manufacturer.

a SEAT THE SLING in the saddle of the hook with the hook latch completely closed. See figure 5.

b CENTER THE LOAD on the hook so it will remain balanced and not tip or rotate to one side.

2.5 Moving the Load

Important!

- Obey a stop signal from anyone.
- Maintain tension on the wire rope to keep it tightly and evenly wound on the drum.
- If the crane and load are not visible during the entire operation, get help from another person.
- Appoint a supervisor if more than one person is involved in the operation. This will reduce confusion and increase safety.
- When lifting a load, use a tag line to keep the load from swinging or twisting, while keeping yourself away from the load.

2.5.1 MOVE THE LOAD slowly and smoothly, only a small distance at first. Make sure the load is balanced and securely attached before continuing.

2.5.2 OPERATE THE WINCH to raise or lower the load. Refer to the instructions in the Winch Owner's Manual.

2.5.3 OBSERVE THE WIRE ROPE as it winds onto the drum. If it becomes loose, uneven, or overlapped, stop the operation and rewind the wire rope before continuing. **Continued operation with overlapped or uneven wire rope can damage the wire rope and shorten its life.**

2.5.4 ROTATE THE BOOM to move the load side-to-side.

a ROTATE THE BOOM slowly and smoothly to avoid swinging the load or causing shock loads. **Do not jam the boom against other objects.**

b PUSH AGAINST THE BOOM at the midpoint between the mast and the end of the boom. **Do not push or pull the load, wire rope, or any other part of the crane other than the boom.**

3.1 Cleaning the Crane

Important!

Increase the frequency of maintenance procedures if the crane is:

- Operated for long periods.
- Used to lift heavy loads.
- Operated in wet, dirty, hot, or cold surroundings.

Clean the crane to remove dirt and help prevent rust and corrosion.

3.1.1 CLEAN THE CRANE every six months or whenever it is dirty.

a WIPE ALL EQUIPMENT with an oily rag to remove dirt and grease.

b LEAVE A LIGHT FILM of oil on all surfaces to protect against rust and corrosion.

c WIPE OFF excessive amounts of oil to avoid the accumulation of dirt.

3.1.2 REMOVE UNNECESSARY OBJECTS from the area surrounding the crane.

3.2 Lubricating the Crane

Important!

- Make sure lubricant has a temperature rating appropriate for the ambient temperatures of the operation.

Lubricate the crane properly to help protect it from wear and rust. Read the following instructions carefully.

3.2.1 LUBRICATE THE ROLLER ASSEMBLY on the 522 base at least every 6 months. Use a grease brush to apply a light film of NLGI #2 grease to the rollers and capscrew.

3.2.2 LUBRICATE THE WHEELS on the 514 base at least every 6 months. Use a grease brush to apply a light film of NLGI #2 grease to the roller bearings on the rear caster wheels. Apply 2 to 3 drops of 150 grade gear oil to the shafts on all wheels. Rotate the wheels to allow oil to penetrate, and wipe off excess oil to avoid accumulation of dirt.

3.2.3 LUBRICATE ALL PINS at least every 6 months. Use a grease brush to apply a light film of NLGI #2 grease to all pins.

3.2.4 LUBRICATE THE WINCH at least every 6 months. Refer to the Winch Owner's Manual for instructions.

3.2.5 LUBRICATE THE WIRE ROPE at least every 6 months, by wiping a thin coat of oil onto the wire rope using an oily rag.

3.3 Inspecting the Equipment

Important!

- Start an inspection program as soon as you put the crane into use.
- Appoint a qualified person to be responsible for regularly inspecting the equipment.
- Keep written records of inspection. This allows comparison with comments from previous inspections so you can see changes in condition or performance.

Perform frequent inspections:

- Before each operation.
- Every 3 hours during operation.
- Whenever you notice signs of damage or poor operation.

⚠WARNING

Do not use damaged or malfunctioning equipment. Place an "OUT OF ORDER" sign on the crane. Do not use the crane until the sign is removed by a qualified maintenance person who has completely corrected the problem.

Inspect the crane to detect signs of damage or poor operation before they become hazardous.

3.3.1 CONSULT APPLICABLE CODES AND REGULATIONS for specific rules on inspecting the crane and other equipment.

3.3.2 REFER TO THE WINCH OWNER'S MANUAL for information regarding winch inspection.

3.3.3 **Instructions for Frequent Inspection**

a. VISUALLY INSPECT the entire crane and all other equipment involved in the operation.

- Check all equipment for cracks, dents, bending, rust, wear, corrosion and other damage.
- Make sure the wire rope is installed correctly and anchored securely to the drum.
- Make sure the entire crane is properly lubricated.
- Make sure all fasteners are tight and secure.
- Make sure mounting fasteners are tightened securely.
- Make sure the foundation is in good condition, and capable of supporting the crane and its load under all load conditions.

b. TEST CRANE PERFORMANCE by moving a test load of 100 pounds.

- Listen for unusual noises, and look for signs of damage as you operate the crane.
- Make sure the wire rope winds evenly and tightly onto the drum. If it is loose or uneven, rewind it before continuing.
- Make sure the load moves smoothly, without hesitation or strain, and that the winch handle rotates freely in both directions.
- Make sure the boom rotates freely when you push it, and remains stationary when you release it.
- Check the brake. Raise the load, then lower it and stop it a few feet off the ground. If the load continues to coast or creep, the brake may be in need of repair or adjustment.

Completely correct all problems before continuing. Use the Troubleshooting Chart to help determine the cause of certain problems. See table 2.

Perform periodic inspections:

- Every 6 months.
- Whenever you return the crane to service from storage.
- Whenever you notice damage or poor operation in a frequent inspection.
- Whenever you have, or think you may have, overloaded or shock loaded the crane.

Figure 6 – Broken Wires

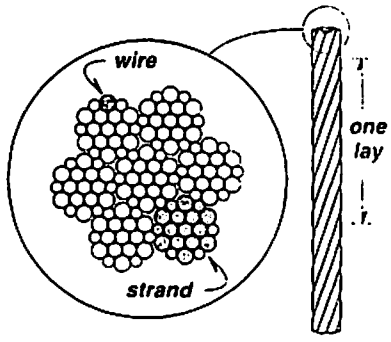

Wire rope assembly must be replaced if more than 6 wires are broken in one lay, or if more than 3 wires are broken in one strand in one lay.

3.3.4 Instructions for Periodic Inspection

a. VISUALLY INSPECT the crane and all other equipment.

- Check the finish for wear, flaking, or other damage.
- Check all equipment for cracks, dents, bending, rust, wear, corrosion and other damage. If the crane was overloaded, or if you notice cracks and other signs of overloading, check for damage using magnetic or chemical crack detecting procedures.
- Check all fasteners for stripped threads, wear, bending, and other damage.
- Make sure the entire crane is properly lubricated.
- Make sure the wheels on the 514 base rotate freely.
- Make sure all labels and plates are readable, firmly attached, free of damage and clean. Replacements are available from the factory.

b. REMOVE THE WIRE ROPE entirely from the crane.

- Always wear protective clothing when handling wire rope.
- Check the entire length of wire rope for bent wires, crushed areas, broken or cut wires, corrosion, and other damage. Carefully inspect areas that pass over sheaves or through roller guides.
- Note the location and concentration of broken wires. Replace wire rope if more than 6 wires are broken in one lay, or more than 3 wires are broken in one strand in one lay. See figure 6.
- Make sure the load hook or other device is securely attached to the wire rope, and the wire rope where it is attached is not frayed, corroded, broken, or otherwise damaged.
- Measure the throat opening, thickness, and twist of the hook. Replace the hook if it shows signs of damage. See figure 7.
- Make sure hook latch opens without binding and closes when released.
- Check the anchor holes in the drum and the surrounding area for signs of wear or distortion.

Figure 7 – Load Hook Inspection

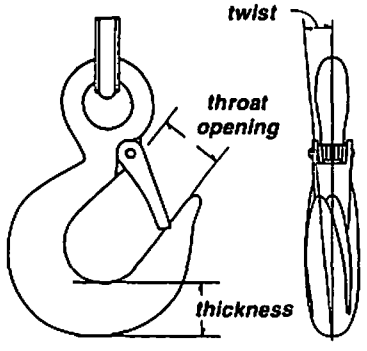

The wire rope assembly must be replaced if the throat opening is 15% wider than nominal, if the thickness is 10% less than nominal, or if the hook is twisted 10° or more.

Figure 8 – Rope Diameter

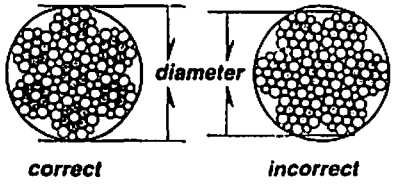

The wire rope assembly must be replaced if the diameter measures less than the minimum diameter at any point.

wire rope diameter	minimum diameter
1/8 in	7/64 in (.1094 in)
3/16 in	11/64 in (.1719 in)

c. PLACE 100 POUNDS of tension on the wire rope.
   - Measure the diameter of the wire rope, especially in areas where wear is noticeable. Replace the wire rope if the diameter measures below the minimum diameter at any point. See figure 8.

d. REMOVE THE WINCH and inspect it by following the instructions in the Winch Owner's Manual.

e. DISASSEMBLE THE CRANE, and inspect each part for damage.

f. REMOVE THE CRANE BASE from the foundation.
   - Check fasteners for stripped threads, wear, bending, and other damage.
   - Check the foundation for cracks, corrosion, and other damage.

g. FASTEN THE CRANE BASE securely to the foundation.

h. REASSEMBLE THE CRANE.

i. TEST CRANE PERFORMANCE by operating the crane with a test load equal to the load rating.
   - Listen for unusual noises, and look for signs of damage as you operate the crane.
   - Make sure the wire rope winds evenly and tightly onto the drum. If it is loose or uneven, rewind it before continuing.
   - Make sure the load moves smoothly, without hesitation or strain, and that the winch handle rotates freely in both directions.
   - Make sure the boom rotates freely when you push it, and remains stationary when you release it.
   - Check the brake. Raise the load, then lower it and stop it a few feet off the ground. If the load continues to coast or creep, the brake may be in need of repair or adjustment.

Completely correct all problems before continuing. Use the Troubleshooting Chart to help determine the cause of certain problems. See table 2.

Table 1 – Inspection Checklist

checked boxes indicate damage or problem in need of repair

	damages	problems
general	☐ finish weathered, flaking, otherwise damaged	☐ equipment not properly lubricated
	☐ parts cracked, bent, rusted, worn, otherwise damaged	☐ unusual noises, other signs of malfunction
foundation	☐ loose, unstable, otherwise damaged	☐ not level - boom swerves
fasteners	☐ stripped threads, bent, worn, otherwise damaged	☐ loose, not tightened to the proper torque
boom assembly	☐ holes worn, distorted, or otherwise damaged	☐ does not rotate freely
winch assembly	☐ gears, bearings, and other parts worn, otherwise damaged	☐ winch jerks or hesitates under load
	☐ brake corroded, cracked, worn, otherwise damaged	☐ brake does not operate properly
sheaves	☐ holes worn, distorted, or otherwise damaged	☐ does not rotate freely
wire rope	☐ bent, crushed, otherwise damaged	☐ wire rope loosely or unevenly wound
	☐ broken wires, see figure 6	
	replace if more than 6 wires in one lay,	number per strand =
	or 3 wires in one strand in one lay, are broken	number per lay =
	☐ diameter reduced, see figure 8	
	replace if diameter is excessively worn	diameter =
end connections	☐ corroded, rusted, worn, otherwise damaged	☐ not securely attached
load hook	☐ twisted, bent, worn, otherwise damaged, see figure 7	☐ hook latch fails to close when released
	replace if twist is 10 degrees or more	twist =
	replace if throat width is 15% larger than nominal	throat width =
	replace if thickness is 10% less than nominal	thickness =
labels and plates	☐ dirty, illegible, otherwise damaged	☐ loosely attached or missing

comments _____

authorized signature _____ date _____

3.4 Repairing the Crane

Important!

- It is your responsibility to determine when to replace parts. When considering whether to continue using a part or to replace it, remember that replacing it is the best way to avoid further equipment damage.
- Appoint a qualified person to be responsible for all repairs to the equipment.

3.4.1 GET FACTORY AUTHORIZATION for all repairs. Unauthorized repairs will void the warranty, and may lead to damage or failure of the crane.

3.4.2 REPLACE DAMAGED OR POORLY OPERATING PARTS with Thern repair parts.

3.4.3 REFINISH AREAS where the paint is worn or flaking. A good finish helps to protect against corrosion and weather damage.

a REMOVE THE FINISH from damaged areas, down to the bare metal.

b CLEAN THE AREA thoroughly.

c REPAINT with a high quality primer and finishing coat.

3.4.4 TO ORDER REPAIR PARTS, contact your local dealer. Include the following information when ordering:

- model number
- serial number (or code number)
- part number
- date purchased, and from whom
- description of what happened, or what is wrong
- your name and return address

Table 2 – Troubleshooting Chart

problem	cause	correction
overheating	• operated too long without rest	allow to cool
	• load too heavy	lighten load
	• poor lubrication	inspect and lubricate as necessary
	• bearing seized up	inspect and replace as necessary
boom bounces up and down	• load too heavy	lighten load
	• mounting bolts loose	tighten mounting bolts to proper torque
	• sheave worn or damaged	inspect and replace as necessary
	• foundation loose or unlevel	inspect and repair as necessary
	• winch gears worn or damaged	inspect and repair as necessary
boom does not rotate	• rotation points contaminated or worn	inspect and repair as necessary
	• flange bearing broken or locked	inspect and replace as necessary
boom swerves	• foundation loose or unlevel	inspect and repair as necessary
	• mast bent, distorted, or leaning	inspect and repair as necessary
unusual noises		
high pitched squeak	• poor lubrication	lubricate entire crane properly
grinding noise	• contaminated lubricant at rotation points	clean and lubricate rotation points
rattling noise	• loose bolts, set screws or other fasteners	tighten all bolts and other fasteners

Refer to the Winch Owner's Manual for possible problems with the winch and brake.

4.1 Transporting the Crane

Important!

- Keep a record of what you ship, and when you send it.

4.1.1 REMOVE THE WIRE ROPE from the crane if necessary, by disconnecting it from the winch drum.

4.1.2 FOLD THE BOOM DOWN by removing the rear pin and lowering the boom until it rests against the mast. Replace the pin to avoid loosing it.

4.1.3 PACK THE CRANE for transport, using the original packaging materials, if appropriate.

4.1.4 INSPECT THE CRANE according to the Instructions for Frequent Inspection before installing it for operation.

4.2 Storing the Crane

4.2.1 REMOVE THE WIRE ROPE from the crane if necessary, by disconnecting it from the winch drum.

4.2.2 FOLD THE BOOM DOWN, or remove the boom from the mast.

4.2.3 STORE THE CRANE in a cool clean place away from corrosive chemicals and moisture.

4.2.4 SEAL THE CRANE in plastic with a desiccant to help protect it from rust, corrosion, and other damage.

4.2.5 INSPECT THE CRANE according to the Instructions for Periodic Inspection before installing it for operation.

Portable Davit Crane		Model 5122M1		Model 5122M1SS	
item	description	part number	qty.	part number	qty.
1	Flange Bearing 2.890ID x 3.50OD x 2.25 NYLATRN	B1914	1	B1914	1
2	Mast	B1483	1	B2467	1
3	Boom	B1428	1	B2481	1
4	Clevis Pin .500 x 3.766 SST	A2840	2	A2840	2
5	Hair Pin Cotter .500/.750 SST	A2838	2	A4453	2
6	Clevis Pin .312 x 1.262 SST	A2839	1	A2839	1
7	Cotter Pin .125 x .750 SST	A3997	1	A3997	1
8	Sheave 2.50OD x .375 x .219 GR	A2063	1	A4466	1
9	Cable Guide SST	B2483	1	B2483	1
10	Quick Release Pin .250 x .750 SST 303	A3996	1	A3996	1
11	Capscrew HxHd .375-16NC x 1.000 SST	A3355	2	A3355	3
12	Hex Nut NyLk .375-16NC SST	A4325	2	—	
13	Hand Winch	M4021PB-A	1	M4041PBSS-A	1
14	Lock Washer HISpr .375 SST	—		A3357	3
15	Hex Nut .375-16NC SST	—		A3356	3

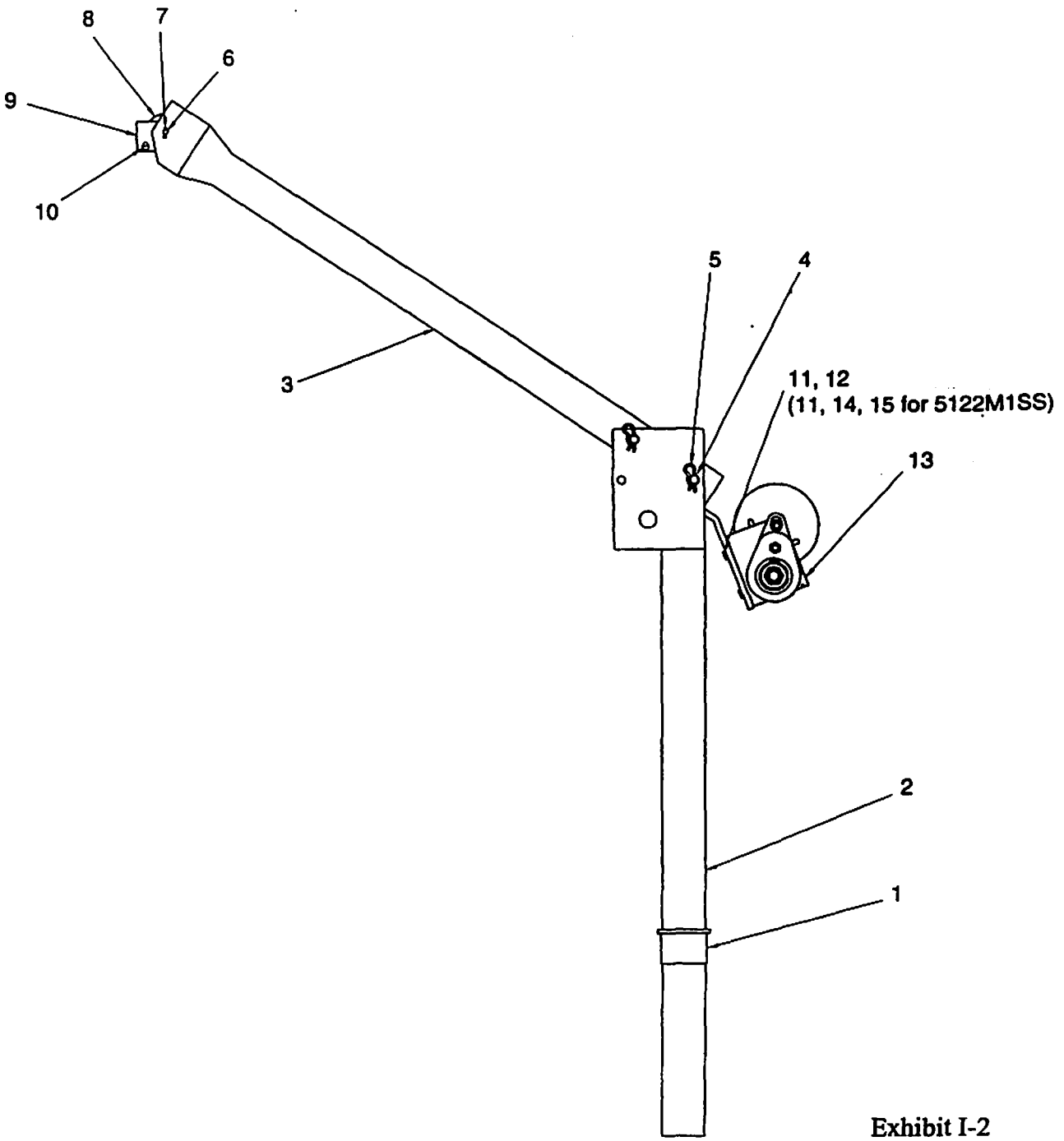

Exhibit I-2
Sheet 17 of 18

Model 522 Base			
item	description	part number	qty.
1	Base	C1250	1
2	Capscrew HxHd .500-13NC x 4.500 SST	A4198	1
3	Lock Washer HISpr. 500 SST	A3937	1
4	Hex Nut .500-13NC SST	A4717	1
5	Roller	A2061	2

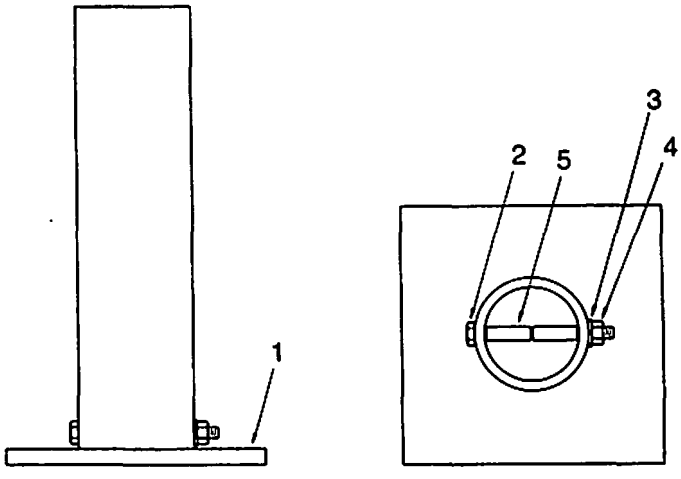

Model 514 Wheel Base			
item	description	part number	qty.
1	Base	C1252	1
2	Capscrew HxHd .375-16NC x 2.500 ZNPL GR5	A3518	4
3	Hex Nut .375-16NC ZNPL GR5	A3231	4
4	Lock Washer HISpr .375 ZNPL	A2926	4
5	Wheel	A2023	2
6	Clevis Pin .500 x 2.266	A2024	2
7	Flat Washer SAE .500 ZNPL	A2932	2
8	Cotter Pin .125 x 1.000 STL ZNPL	A3179	2
9	Capscrew HxHd .500-13NC x 4.500 ZNPL GR5	A3135	1
10	Hex Nut .500-13NC ZNPL GR2	A3227	1
11	Lock Washer HISpr .500 ZNPL	A2930	1
12	Socket Base	512	1

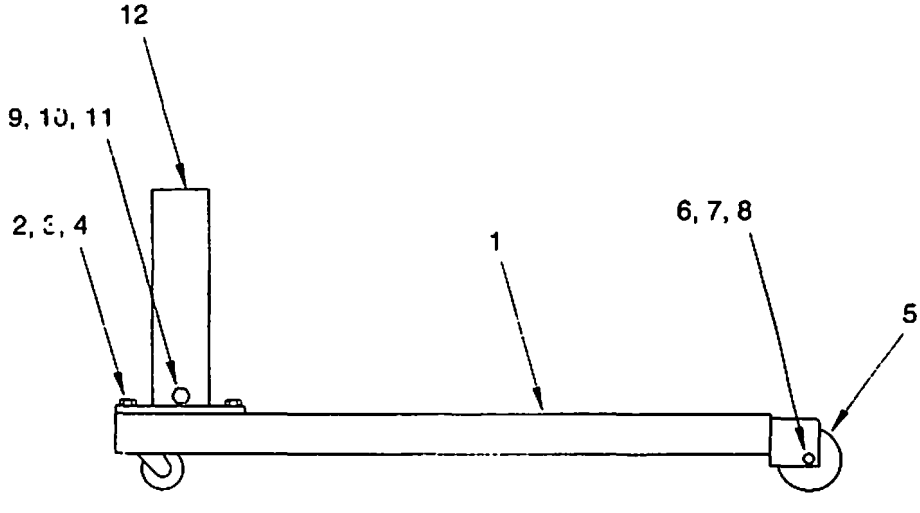

Exhibit I-2
Sheet 18 of 18

A6110-D1373C-0995

Exhibit I-3
Owner's Manual Spur Gear Hand Winch

THERN INCORPORATED

Read this Owner's Manual thoroughly before operating the winch. This manual tells you how to install, operate, and maintain the winch. Keep it with the winch at all times. Replacements are available from Thern, Inc., PO Box 347, Winona, MN 55987, 507-454-2996.

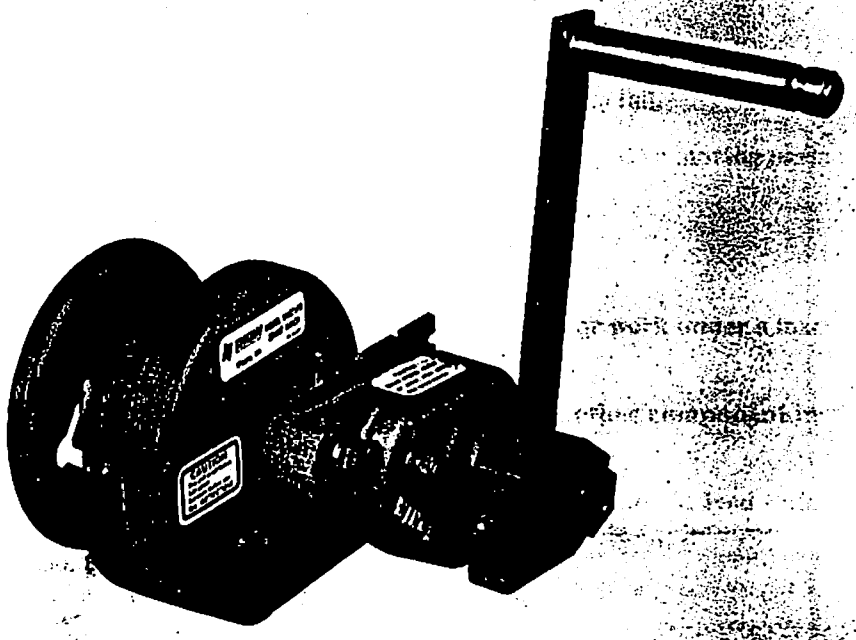

Owner's Manual

For The Model M4021PB Spur Gear Hand Winch

A5351-D1295C-0594

Exhibit I-3
Sheet 1 of 19

Limited Warranty

Therm, Inc. warrants its products against defects in material or workmanship for one year from the date of purchase by the original using buyer, or if this date cannot be established, the date the product was sold by Therm, Inc. to the dealer. To make a claim under this warranty, the product must be returned, prepaid, directly to Therm, Inc., 5712 Industrial Park Road, Winona, Minnesota 55987. The following information must accompany the product: the date of purchase, the description of the claimed defect, and a complete explanation of the circumstances involved. If the product is found to be defective, it will be repaired or replaced free of charge, and Therm, Inc. will reimburse the shipping cost.

This warranty does not cover any damage due to accident, misuse, abuse, or negligence. Any unauthorized alteration, repair or modification of the product outside the Therm, Inc. factory shall void this warranty. Factory authorization must be in writing from Therm, Inc.

FACTORY AUTHORIZED REPAIR OR REPLACEMENT AS PROVIDED UNDER THIS WARRANTY IS THE EXCLUSIVE REMEDY TO THE CONSUMER. THERN, INC. SHALL NOT BE LIABLE FOR ANY INCIDENTAL OR CONSEQUENTIAL DAMAGES FOR BREACH OF ANY EXPRESS OR IMPLIED WARRANTY ON THIS PRODUCT. EXCEPT TO THE EXTENT PROHIBITED BY APPLICABLE LAW, ANY IMPLIED WARRANTY OF MERCHANTABILITY OR FITNESS FOR A PARTICULAR PURPOSE ON THIS PRODUCT IS LIMITED IN DURATION TO THE DURATION OF THIS WARRANTY.

Some states do not allow the exclusion or limitation of incidental or consequential damages, or allow limitations on how long an implied warranty lasts, so the above limitation or exclusion may not apply to you. This warranty gives you specific legal rights, and you may also have other rights which vary from state to state.

Note: Therm, Inc. reserves the right to change the design or discontinue the production of any product without prior notice.

About This Manual

The Occupational Safety and Health Act of 1970 states that it is the employer's responsibility to provide a workplace free of hazard. To this end, all equipment should be installed, operated, and maintained in compliance with applicable trade, industrial, federal, state, and local regulations. It is the equipment owner's responsibility to obtain copies of these regulations and to determine the suitability of the equipment to its intended use.

This Owner's Manual, and warning labels attached to the equipment, are to serve as guidelines for hazard-free installation, operation, and maintenance. They should not be understood to prepare you fo· every possible situation.

The information contained in this manual is applicable only to the Thern Model M4021PB Spur Gear Hand Winches. Do not use this manual as a source of information for any other equipment.

The following symbols are used for emphasis throughout this manual:

⚠WARNING!

Failure to follow 'WARNING!' instructions may result in equipment damage, property damage, and/or serious personal injury.

⚠CAUTION!

Failure to follow 'CAUTION!' instructions may result in equipment damage, property damage, and/or minor personal injury.

Important!

Failure to follow 'important!' instructions may result in poor performance of the equipment.

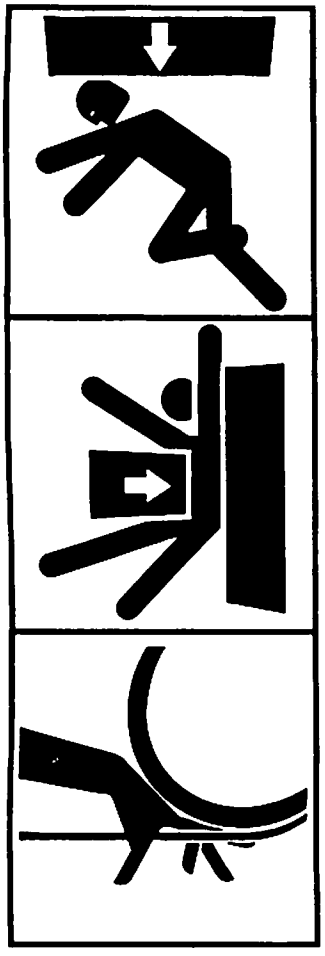

Suggestions for Safe Operation

⚠WARNING

DO the following:

Read and comply with the guidelines set forth in this Owner's Manual. Keep this manual, and all labels attached to the winch, readable and with the equipment at all times. Contact Thern, Inc. for replacements.

Check lubrication before use.

Install the wire rope securely to the winch drum.

Keep at least 4 wraps of wire rope wound on the drum at all times, to serve as anchor wraps. Failure to do so could cause the load to fall.

Keep hands away from the drum, gears, wire rope, and other moving parts of the equipment.

DO NOT do the following:

Do not lift people, or things over people. Do not walk or work under a load or in the line of force of any load.

Do not exceed the load rating of the winch or any other component in the system.

Do not use more than one winch to move a load that exceeds the load rating of a single winch. A shift in load weight could overload the equipment.

Do not use damaged or malfunctioning equipment. To do so could result in failure of the equipment.

Do not modify the equipment in any way. To do so could cause equipment failure.

Do not wrap the wire rope around the load. This damages the wire rope and could cause the load to fall. Use a sling or other approved lifting device.

Do not operate the winch with guards removed or improperly installed.

Do not divert your attention from the operation. Stay alert to the possibility of accidents, and try to prevent them from happening.

Do not jerk or swing the load. Avoid shock loads by starting and stopping the load smoothly. Shock loads overload the equipment and may cause damage.

Do not lift loads or pull loads on an incline unless the winch is equipped with a brake.

Do not leave a suspended load unattended. Place the load on the ground if it must be left unattended.

1.1 Installing the Winch

Important!

- Inspect the winch immediately following installation according to the Instructions for Periodic Inspection. This will give you a record of the condition of the winch with which to compare future inspections.
- A qualified professional should inspect or design the foundation to insure that it will provide adequate support.
- Locate the winch so it will be visible during the entire operation.

⚠WARNING

Do not install the winch in an area defined as hazardous by the National Electric Code, unless installation in such an area has been thoroughly approved.

Do not install the winch near corrosive chemicals, flammable materials, explosives, or other elements that may damage the winch or injure the operator. Adequately protect the winch and the operator from such elements.

Position the winch so the operator can stand clear of the load, and out of the path of a broken wire rope that could snap back and cause injury.

Attach the winch to a rigid and level foundation that will support the winch and its load under all load conditions, including shock loading.

1.1.1 CONSULT APPLICABLE CODES AND REGULATIONS for specific rules on installing the equipment.

1.1.2 LOCATE THE WINCH in an area clear of traffic and obstacles that could interfere with operation. Make sure the winch is accessible for maintenance and operation.

1.1.3 MAINTAIN A FLEET ANGLE between 1/2 and 1-1/2 degrees. The proper fleet angle minimizes wire rope damage by helping the wire rope wind uniformly onto the drum. See figure 1.

1.1.4 FASTEN THE WINCH securely to the foundation.

CONTACT A QUALIFIED PROFESSIONAL FOR MOUNTING INSTRUCTIONS.

Important!

- Use a sheave or roller guide to direct the wire rope to the drum whenever possible.
- Install sheaves, tracks and other equipment so they will remain fixed under all load conditions. Follow the recommendations of the equipment manufacturer.
- Use sheaves of proper diameter to minimize wear on the wire rope. Follow the recommendations of the sheave manufacturer.

Figure 1 – Maintaining the Fleet Angle

- *When wire rope travels over a sheave or through a roller guide – maintain fleet angle by locating the sheave or guide an appropriate distance from the drum, shown as distance "A".*

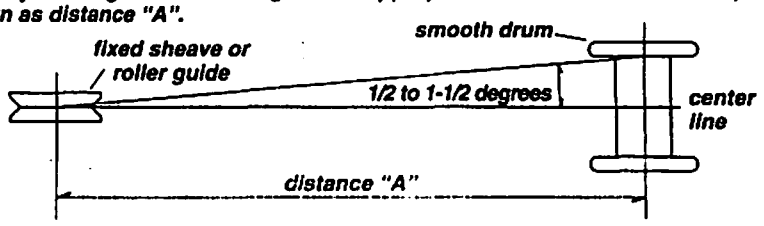

- *When wire rope travels directly to the load – maintain fleet angle by controlling side-to-side movement of the load with tracks or guide rails. Allowing the load to move too far to one side causes stress on the drum flange which may cause damage.*

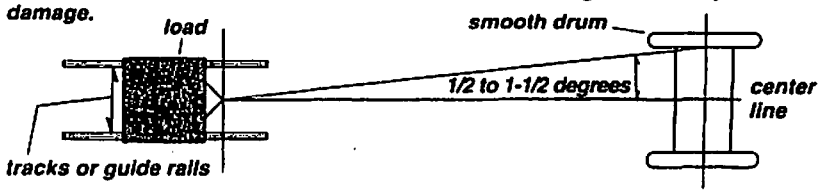

1.2 Installing the Wire Rope

Important!

- Use wire rope and other rigging equipment rated for the size of the largest load you will be moving.
- Do not drag the wire rope through dirt or debris that could cause damage, or poor operation.
- Always wear protective clothing when handling wire rope.

Figure 2 – Flange Clip Anchor

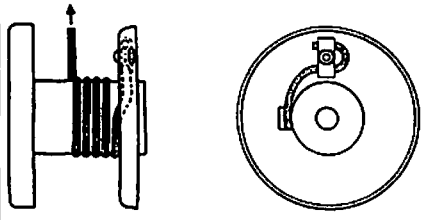

drum end view

typical installation shown right lay – underwound

Figure 3 – Quick Disconnect Anchor

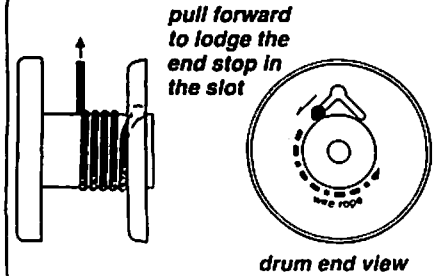

drum end view

typical installation shown right lay – underwound

⚠WARNING

Install the wire rope so it is wound correctly as shown, or the winch will not work properly, and the load could fall.

Install the wire rope securely to the winch drum. A poorly secured wire rope could come loose from its anchor and allow the load to fall.

1.2.1 PURCHASE THE PROPER WIRE ROPE for your application. Keep the following in mind when selecting a wire rope. Contact a reputable wire rope supplier for help.

a BREAKING STRENGTH of new wire rope should be at least 3 times greater than the largest load placed on the winch. If loads are lifted or pulled on an incline, the breaking strength must be at least 5 times greater than the largest load. These are minimum values and will vary with the type of load and how you are moving it.

b WIRE ROPE LAY must agree with the winding direction of the drum to help insure proper winding.

c WE RECOMMEND 7 x 19 galvanized aircraft cable for diameters up to 5/16 inch.

1.2.2 INSTALL THE HANDLE by loosening the set screw and assembling the handle and socket to the hex drive. Secure in place by tightening the set screw.

1.2.3 ANCHOR THE WIRE ROPE to the drum using either the flange clip or quick disconnect anchor.

a FLANGE CLIP ANCHOR. See figure 2.

- PASS THE END OF THE WIRE ROPE through the hole in the flange.
- INSERT THE CARRIAGE BOLT, loop the wire rope around the bolt, and install the clip so the wire rope is held by the curves of the clip.
- INSTALL THE JAM NUT and tighten it until the wire rope is flattened against the drum flange.

b QUICK DISCONNECT ANCHOR. See figure 3.

- PUSH THE END STOP through the large center hole in the drum flange.
- PULL THE WIRE ROPE forward to lodge the end stop in the slot.

1.2.4 TURN THE HANDLE CLOCKWISE to wind wire rope onto the drum. If wire rope unwinds from the drum when the handle is rotated clockwise, the wire rope is installed incorrectly. **Install the wire rope correctly before continuing.**

1.2.5 WIND FOUR FULL WRAPS of wire rope onto the drum by operating the winch while holding the wire rope taught. **These wraps serve as anchor wraps and must remain on the drum at all times.**

2.1 General Theory of Operation

Important!

- Limit nonuniform winding by keeping tension on the wire rope and by maintaining the proper fleet angle.
- It is your responsibility to detect and account for different factors affecting the condition and performance of the equipment.

2.1.1 THE PULL REQUIRED to move the load must not exceed the load rating of the winch. Consider the total force required to move the load, not the weight of the load.

2.1.2 THIS EQUIPMENT CAN develop forces that will exceed the load rating. It is the responsibility of the equipment user to limit the size of the load. Inspect the equipment regularly for damage according to the instructions contained in this manual.

2.1.3 USE A DISC BRAKE on all hand winches used to lift loads or pull loads on an incline.

2.1.4 PERFORMANCE RATINGS of the equipment are affected by the amount of wire rope wound on the drum, the way in which it is wound, and the way the winch is used.

a. DRUM CAPACITY depends on how tightly and evenly the wire rope is wound on the drum. Actual drum capacities are usually 25-30% less than values shown in performance tables, due to loose winding and overlapping.

b. FORCE REQUIRED TO LIFT the load increases with each additional layer of wire rope wound onto the drum. The value shown in performance tables is based on an empty drum and maximum handle length.

c. LOAD RATING represents the maximum pull that can be placed on new equipment. Load ratings are assigned values for specific amounts of load travel or wire rope accumulation. The load rating decreases as layers of wire rope accumulate on the drum.

2.1.5 DUTY RATINGS refer to the type of use the equipment is subject to. Consider the following when determining duty rating.

a. ENVIRONMENT: harsh environments include hot, cold, dirty, wet, corrosive, or explosive surroundings. **Protect the equipment from harsh environments when possible.**

b. MAINTENANCE: poor maintenance, meaning poor cleaning, lubrication, or inspection, leads to poor operation and possible damage of the equipment. **Minimize poor maintenance by carefully following the instructions contained in this manual.**

c. LOADING: severe loading includes shock loading and moving loads that exceed the load rating of the equipment. **Avoid shock loads, and do not exceed the load rating of the equipment.**

d. FREQUENCY OF OPERATION: frequent or lengthy operations increase wear and shorten the life span of gears, bearings, and other components. **Increase maintenance of the equipment if used in frequent operations.**

CONTACT THE FACTORY FOR MORE INFORMATION.

2.2 Suggestions for Safe Operation

|⚠WARNING|

DO the following:

Keep at least 4 wraps of wire rope wound on the drum at all times, to serve as anchor wraps. With less than 4 wraps on the drum the wire rope could come loose, causing the load to fall.

Keep hands away from the drum, gears, wire rope, and other moving parts of the equipment.

Keep all people, including operators and yourself, away from the winch. Keep out of the path of the load, and out of the path of a broken wire rope that might snap back and cause injury.

DO NOT do the following:

Do not lift people, or things over people. Do not walk or work under a load or in the line of force of any load.

Do not exceed the load rating of the winch or any other component in the system. To do so could result in failure of the equipment.

Do not use more than one winch to move a load that exceeds the load rating of a single winch. A shift in load weight could overload the equipment.

Do not use damaged or malfunctioning equipment. To do so could result in failure of the equipment.

Do not modify the equipment in any way. To do so could cause equipment failure.

Do not operate the winch with guards removed or improperly installed.

Do not divert your attention from the operation. Stay alert to the possibility of accidents, and try to prevent them from happening.

Do not jerk or swing the load. Avoid shock loads by starting and stopping the load smoothly. Shock loads overload the equipment and may cause damage.

Do not lift loads or pull loads on an incline unless the winch is equipped with a brake.

Do not leave a suspended load unattended. Place the load on the ground before leaving it unattended.

2.3 Breaking-In the Winch

2.3.1 BREAK-IN OCCURS during the first 10 hours of normal operation. During break-in, mating surfaces become polished, and clearances increase. This is desired for efficient operation of bearings and gears.

2.3.2 INSPECT THE WINCH following break-in according to the Instructions for Periodic Inspection.

2.4 Preparing for Operation

Important!

- When determining whether the load will exceed the load rating, consider the total force required to move the load.

2.4.1 CONSIDER THE OPERATION. Do not begin until you are sure you can perform the entire operation without hazard.

2.4.2 INSPECT ALL COMPONENTS of the system.

a INSPECT THE WINCH and other equipment according to the Instructions for Frequent Inspection.

b OPERATORS must be in good health, alert, thoroughly trained in operating the equipment, and properly clothed (hard hat, safety shoes and safety glasses, no loose clothing).

c THE LOAD must be clear of other objects and free to move. Make sure the load will not tip, spin, roll away, or in any way move uncontrollably.

2.4.3 KNOW YOUR LOAD and make sure you do not exceed the load rating of the winch or any other equipment in the system.

2.5 Attaching the Load

Figure 4 – Attaching Load

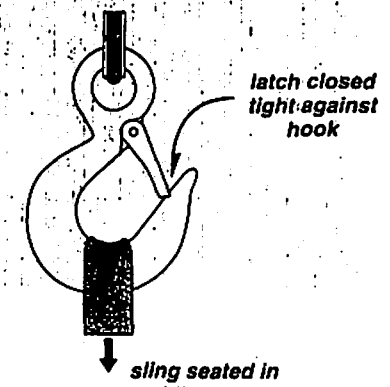

⚠WARNING

Do not wrap the wire rope around the load. This damages the wire rope and could cause the load to fall. Use a sling or other approved lifting device.

2.5.1 CLEAR OBJECTS from the path of the load so you can move it freely and observe it at all times during the operation.

2.5.2 ATTACH THE LOAD using a nylon sling, or other approved lifting device. Follow the recommendations of the sling manufacturer.

a SEAT THE SLING in the saddle of the hook with the hook latch completely closed. See figure 4.

b CENTER THE LOAD on the hook so it will remain balanced and not tip or rotate to one side.

2.6 Moving the Load

Important!

- Obey a stop signal from anyone.
- Maintain tension on the wire rope to keep it tightly and evenly wound on the drum.
- If the winch and load are not visible during the entire operation, get help from another person.
- Appoint a supervisor if more than one person is involved in the operation. This will reduce confusion and increase safety.
- When lifting a load, use a tag line to keep the load from swinging or twisting, while keeping yourself away from the load.
- Remove the winch handle when the winch is not in use, to help avoid unauthorized use.

2.6.1 MOVE THE LOAD slowly and smoothly, only a small distance at first. Make sure the load is balanced and securely attached before continuing.

2.6.2 TURN THE HANDLE CLOCKWISE to wind wire rope onto the drum. If wire rope unwinds from the drum when the handle is rotated clockwise, the wire rope is installed incorrectly. **Install the wire rope correctly before continuing.**

2.6.3 OBSERVE THE WIRE ROPE as it winds onto the drum. If it becomes loose, uneven, or overlapped, stop the operation and rewind the wire rope before continuing. **Continued operation with overlapped or uneven wire rope can damage the wire rope and shorten its life.**

3.1 Cleaning the Winch

Important!

Increase the frequency of maintenance procedures if the winch is:

- Operated for long periods.
- Used to pull heavy loads.
- Operated in wet, dirty, hot, or cold surroundings.

Clean the winch to remove dirt and help prevent rust and corrosion.

3.1.1 CLEAN THE WINCH every six months or whenever it is dirty.

a WIPE ALL EQUIPMENT with an oily rag to remove dirt and grease.

b LEAVE A LIGHT FILM of oil on all surfaces to protect them against rust and corrosion.

c WIPE OFF excessive amounts of oil to avoid the accumulation of dirt.

3.1.2 REMOVE ALL UNNECESSARY OBJECTS from the area surrounding the winch.

3.2 Lubricating the Winch

Important!

- Make sure lubricant has a temperature rating appropriate for the ambient temperatures of the operation.

⚠CAUTION

Do not over lubricate the brake bushings. Over lubricating may cause oil to leak onto the friction discs, which may damage the friction discs or result in poor operation of the disc brake.

Lubricate the spur gears before each operation, and periodically during operation. Failure to lubricate the gears will cause damage or deformation of gear teeth.

Lubricate the winch properly to help protect it from wear and rust. Read the following instructions carefully.

3.2.1 CONSULT MANUFACTURER'S RECOMMENDATIONS for specific information on lubricating the wire rope and other equipment.

3.2.2 LUBRICATE WINCH BEARINGS AND SHAFTS at least every 6 months.

a APPLY 2 TO 3 DROPS of 150 grade gear oil to bearings and shafts at all friction points.

b ROTATE THE DRUM several times to allow the oil to penetrate, and wipe off excess oil to avoid accumulation of dirt.

3.2.3 LUBRICATE WINCH GEARS before every operation and at least every 10 hours during operation.

a APPLY A LIGHT FILM of open gear lubricant to the gear teeth on all gears.

b USE SPRAYON 201 or equivalent open gear lube. For dirty conditions use a dry lubricant such as dry graphite or Moly.

3.2.4 LUBRICATE THE DISC BRAKE at least every 6 months. Place 1 or 2 drops of 150 grade gear oil into the hole in the brake housing marked "oil", and turn the brake several times to allow the oil to penetrate.

3.2.5 LUBRICATE THE WIRE ROPE by following the wire rope manufacturer's recommendations.

3.3 Inspecting the Equipment

Important!

- Start an inspection program as soon as you put the winch into use.
- Appoint a qualified person to be responsible for regularly inspecting the equipment.
- Keep written records of inspection. This allows comparison with comments from previous inspections so you can see changes in condition or performance.

Perform frequent inspections:

- Before each operation.
- Every 3 hours during operation.
- Whenever you notice signs of damage or poor operation.

⚠WARNING

Do not use damaged or malfunctioning equipment. Place an "OUT OF ORDER" sign on the winch. Do not use the winch until the sign is removed by a qualified maintenance person who has completely corrected the problem.

Inspect the winch to detect signs of damage or poor operation before they become hazardous.

3.3.1 CONSULT APPLICABLE CODES AND REGULATIONS for specific rules on inspecting the winch and other equipment.

3.3.2 CONSULT MANUFACTURER'S RECOMMENDATIONS for information on inspecting the wire rope and other equipment.

3.3.3 **Instructions for Frequent Inspection**

a VISUALLY INSPECT the entire winch and all other equipment involved in the operation.

- Check all equipment for cracks, dents, bending, rust, wear, corrosion and other damage.
- Make sure the wire rope is installed correctly and anchored securely to the drum.
- Make sure the winch and brake are properly lubricated.
- Make sure the set screw holding the handle in place is tight.
- Make sure mounting fasteners are tightened securely.
- Make sure the foundation is in good condition, and capable of supporting the winch and its load under all load conditions.

b TEST WINCH PERFORMANCE by moving a test load of 100 pounds.

- Listen for unusual noises, and look for signs of damage as you operate the winch.
- Make sure the wire rope winds evenly and tightly onto the drum. If it is loose or uneven, rewind it before continuing.
- Make sure the handle rotates freely in both directions.
- Make sure the disc brake ratchet pawl clicks firmly as the brake handle is turned clockwise.
- Check the brake. Raise the load, then lower it and stop it a few feet off the ground. If the load continues to coast or creep, the friction discs may be worn and in need of replacement.

Completely correct all problems before continuing. Use the Troubleshooting Chart to help determine the cause of certain problems. See table 2.

Perform periodic inspections:

- Every 6 months.
- Whenever you return the winch to service from storage.
- Whenever you notice damage or poor operation in a frequent inspection.
- Whenever you have, or think you may have, overloaded or shock loaded the winch.

Figure 5 – Broken Wires

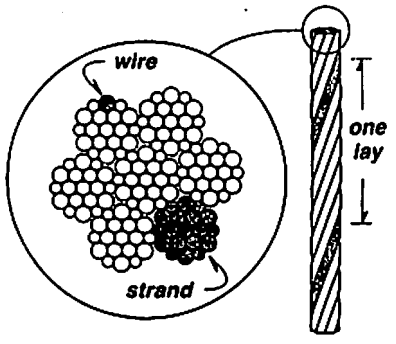

Wire rope assembly must be replaced if more than 6 wires are broken in one lay, or if more than 3 wires are broken in one strand in one lay.

Figure 6 – Load Hook Inspection

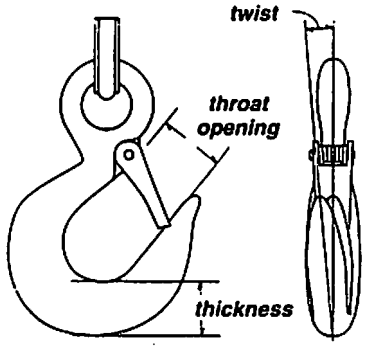

The wire rope assembly must be replaced if the throat opening is 15% wider than nominal, if the thickness is 10% less than nominal, or if the hook is twisted 10° or more.

3.3.4 **Instructions for Periodic Inspection**

a VISUALLY INSPECT the winch and all other equipment.

- Check the finish for wear, flaking, or other damage.
- Check all equipment for cracks, dents, bending, rust, wear, corrosion and other damage. If the winch was overloaded, or if you notice cracks and other signs of overloading, check for damage using magnetic or chemical crack detecting procedures.
- Check all fasteners for striped threads, wear, bending, and other damage.
- Check the foundation for cracks, corrosion, and other damage.
- Make sure the winch and brake are properly lubricated.
- Make sure all labels and plates are readable, firmly attached, free of damage and clean. Replacements are available from the factory.

b REMOVE THE WIRE ROPE entirely from the drum.

- Always wear protective clothing when handling wire rope.
- Check the entire length of wire rope for bent wires, crushed areas, broken or cut wires, corrosion, and other damage. Carefully inspect areas that pass over sheaves or through roller guides.
- Note the location and concentration of broken wires. Replace wire rope if more than 6 wires are broken in one lay, or more than 3 wires are broken in one strand in one lay. See figure 5.
- Make sure the load hook or other device is securely attached to the wire rope, and the wire rope where it is attached is not frayed, corroded, broken, or otherwise damaged.
- Measure the throat opening, thickness, and twist of the hook. Replace the hook if it shows signs of damage. See figure 6.
- Make sure hook latch opens without binding and closes when released.
- Check the anchor holes in the drum flange for signs of wear or distortion.

c PLACE 100 POUNDS of tension on the wire rope.

- Measure the diameter of the wire rope, especially in areas where wear is noticeable. Replace the wire rope if the diameter measures below the minimum diameter at any point. See figure 7.

d REMOVE THE WINCH from the foundation.

- Check fasteners for stripped threads, wear, bends, and other damage.
- Check the frame for bending, distortion, cracks and other damage. A bent frame is caused by overloading, and is a sign that your application may require a winch with a larger load rating.

e MOVE THE DRUM with your hands.

- Check for excessive movement indicating worn or loose gears, bearings, or shafts.
- Disassemble the winch and brake if necessary. Inspect gears, bearings, spring pins, and shafts for wear, corrosion, distortion, and other damage.

Figure 7 – Rope Diameter

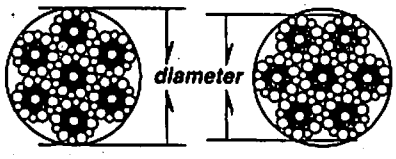

The wire rope assembly must be replaced if the diameter measures less than the minimum diameter at any point.

wire rope diameter	minimum diameter
1/8 in	7/64 in (.1094 in)
3/16 in	11/64 in (.1719 in)

f FASTEN THE WINCH securely to the foundation.

g INSTALL THE WIRE ROPE.

h TEST WINCH PERFORMANCE by operating the winch with a test load equal to the load rating.

- Listen for unusual noises, and look for signs of damage as you operate the winch.
- Make sure the wire rope winds evenly and tightly onto the drum. If it is loose or uneven, rewind it before continuing.
- Observe the rotating drum, look for signs of loose or misaligned bearings.
- Make sure the handle rotates freely in both directions.
- Make sure the disc brake ratchet pawl clicks firmly as the brake handle is turned clockwise.
- Check the brake. Raise the load, then lower it and stop it a few feet off the ground. If the load continues to coast or creep, the friction discs may be worn and in need of replacement.

Completely correct all problems before continuing. Use the troubleshooting chart to help determine the cause of certain problems. See table 2.

Table 1 – Inspection Checklist

checked boxes indicate damage or problem in need of repair

	damages	problems
general	☐ finish weathered, flaking, otherwise damaged ☐ parts cracked, bent, rusted, worn, otherwise damaged	☐ winch jerks or hesitates during operation ☐ unusual noises, other signs of malfunction
fasteners	☐ stripped threads, bent, worn, otherwise damaged	☐ loose, not tightened to proper torque
gears	☐ excessively worn, cracked, corroded, otherwise damaged	☐ loose or improperly lubricated
brake assembly	☐ brake corroded, cracked, worn, otherwise damaged	☐ brake does not operate properly
drum	☐ anchor hole worn, distorted, otherwise damaged	☐ excessive movement or backlash
wire rope	☐ bent, crushed, otherwise damaged ☐ broken wires, see figure 5 replace if more than 6 wires in one lay, or 3 wires in one strand in one lay, are broken ☐ diameter reduced, see figure 7 replace if diameter is excessively worn	☐ wire rope loosely or unevenly wound number per strand = number per lay = diameter =
end connections	☐ corroded, rusted, worn, otherwise damaged	☐ not securely attached
hook or other device	☐ twisted, bent, worn, otherwise damaged, see figure 6 replace if twist is 10 degrees or more replace if throat width is 15% larger than nominal replace if thickness is 10% less than nominal	☐ hook latch fails to close when released twist = throat width = thickness =
labels and plates	☐ dirty, illegible, otherwise damaged	☐ loosely attached or missing

comments _____

_____

_____

_____

authorized signature _____ date _____

3.4 Repairing the Winch

Important!

- It is your responsibility to determine when to replace parts. When considering whether to continue using a part or to replace it, remember that replacing it is the best way to avoid further equipment damage.
- Replace all spring pins and retaining rings when you disassemble the winch or brake for repair or replacement.
- Appoint a qualified person to be responsible for all repairs to the equipment.

3.4.1 GET FACTORY AUTHORIZATION for all repairs. Unauthorized repairs will void the warranty, and may lead to damage or failure of the winch.

3.4.2 REPLACE DAMAGED OR POORLY OPERATING PARTS with Thern repair parts.

3.4.3 REFINISH AREAS where the paint is worn or flaking. A good finish helps to protect against corrosion and weather damage.

a REMOVE THE FINISH from damaged areas, down to the bare metal.

b CLEAN THE AREA thoroughly.

c REPAINT with a high quality primer and finishing coat.

3.4.4 TO ORDER REPAIR PARTS, contact your local dealer. Include the following information when ordering:

- model number
- serial number (or code number)
- part number
- date purchased, and from whom
- description of what happened, or what is wrong
- your name and return address

Table 2 – Troubleshooting Chart

problem	cause	correction
handle turns, drum doesn't turn	• loose or broken spring pins	inspect winch and brake, repair as necessary
	• loose, stripped or broken gears	inspect gears and repair as necessary
handle turns hard or not at all	• ratchet on winch engaged	disengage winch ratchet
	• load too heavy	lighten load
	• spring pins loose or broken on winch or brake	inspect winch and brake, repair as necessary
	• disc brake damaged or locked	inspect brake, repair as necessary
	• gears or bearings broken or locked	inspect and repair as necessary
brake does not operate properly	• friction discs worn or damaged	inspect and replace as necessary
	• friction discs damaged from over lubrication	inspect and replace as necessary
	• disc brake ratchet pawl damaged	inspect and repair as necessary
excessively worn gears or bearings (excessive backlash)	• load too heavy	lighten load
	• poor lubrication of gears or bearings	inspect and relubricate as necessary
overheating	• operated too long without rest	allow to cool
	• load too heavy	lighten load
	• poor lubrication	inspect and lubricate as necessary
	• bearing seized up	inspect and replace as necessary
unusual noises		
high pitched squeak	• poor lubrication	inspect and relubricate as necessary
grinding noise	• contaminated lubrication	clean and relubricate winch
	• dirt in brake or winch gears	inspect and clean as necessary
	• broken gears or bearings	inspect and replace as necessary
rattling noise	• loose bolts, set screws or other fasteners	tighten all bolts and other fasteners
uneven clicking noise in brake	• broken gear tooth in brake	inspect and repair as necessary
weak clicking noise in brake	• spring or ratchet pawl dirty or damaged	inspect and clean or repair as necessary
	• worn brake ratchet pawl, gear, or spring	inspect and replace as necessary
no clicking noise in brake	• ratchet incorrectly installed	disassemble and install correctly
	• ratchet pawl damaged or worn excessively	inspect and replace as necessary

Exhibit I-3
Sheet 15 of 19

4.1 Transporting the Winch

Important!

- Keep a record of what you ship, and when you send it.

4.1.1 PACK THE WINCH using the original packaging materials, if possible.

4.1.2 SEAL THE WINCH in plastic with a desiccant to help protect it from rust, corrosion, and other damage.

4.1.3 INSPECT THE WINCH according to the Instructions for Periodic Inspection before installing it in a new location.

4.2 Storing the Winch

4.2.1 SEAL THE WINCH in plastic with a desiccant to help protect it from rust, corrosion, and other damage.

4.2.2 STORE THE WINCH in a cool clean place away from corrosive chemicals and moisture.

4.2.3 ROTATE THE DRUM periodically to keep bearing and gears surfaces from becoming lacquered.

4.2.4 INSPECT THE WINCH according to the Instructions for Periodic Inspection before installing it for operation.

notes

Model M4021PB Spur Gear Hand Winch			
Item	description	part number	qty.
1	Disc Brake Assembly	C1544	1
2	Handle Shaft	SB3904	1
3	Capscrew Hxhd .375-16NC x 5.500 gr 5 ZNPL	A3519	1
4	Spacer .391 x .560 x 1.212 ZNPLIRDI	A1259	1
5	Groove Pin Type A .187 x 2.000 ALYSTL	A4532	1
6	Flat Washer .375 x .750 x .125 SST	A1907	1
7	Hex Nut Nylk .375-16NC gr 2 ZNPL	A3113	1
8	Frame	C1030	1
9	Drum Assembly	B1040	1
10	Drum Gear Guard	B1066	1
11	Retaining Ring .625 SST	A4136	1
12	Flange Bearing .627 x .877 x .625 BRZ	A1003	2
13	Groove Pin Type A .187 x 1.375 ALYSTL	A4851	1
14	Pinion	A1008	1
15	Handle Assembly	B1041	1
16	Handle Socket	B2089	1
17	Setscrew Sqhd Cuppt .321-18NC x .750 SST	A3885	1
18	Drum Spacer .625 x 11 ga x 3.235	A1143	1
19	Tie Down	A1013	1
20	Hex Nut .250-20NC SST	A3331	1
21	Carriage Bolt .250-20NC x .500 SST	A3333	1

[1] Items 15, 16, and 17 are not shown in parts drawing.

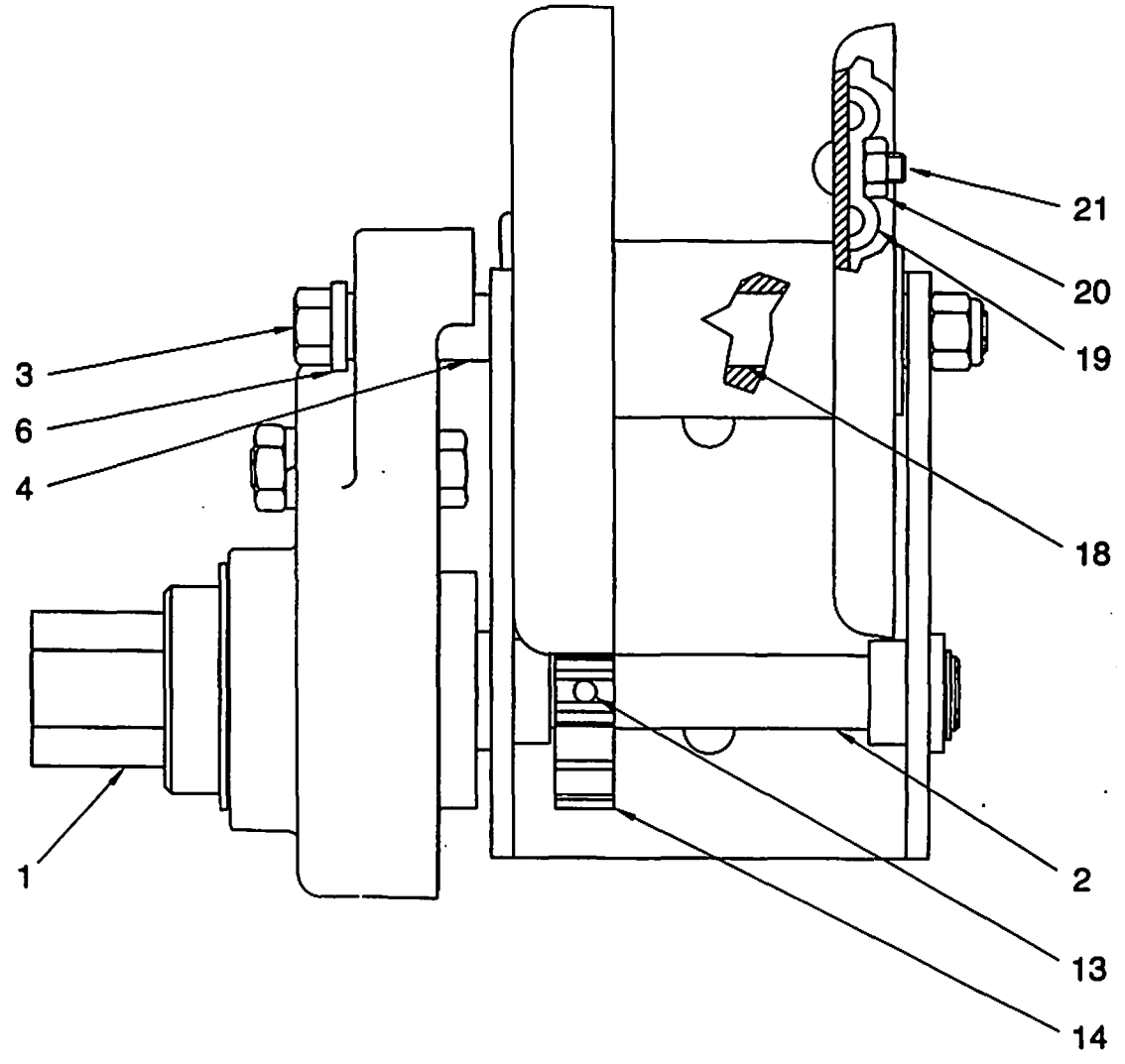

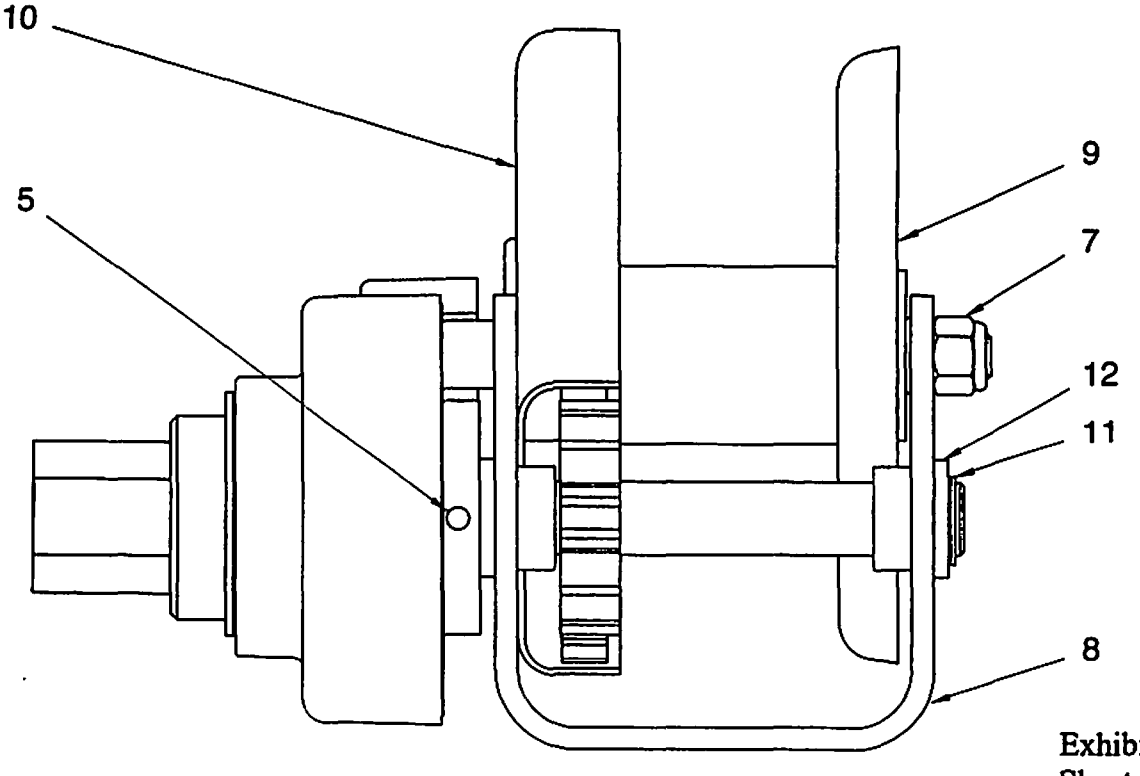

Exhibit I-3
Sheet 19 of 19

Exhibit J
Management of Revegetated Areas

EXHIBIT J

Management and Maintenance of Vegetation

1. Vegetation Management

1.1. Management of Emergent Vegetation: Emergent vegetation, commonly known as "emergents" is an important component for wildlife habitat within the permanent and seasonal wetlands. In the Sacramento Valley, emergents are predominantly either cattails (Typha sp.) and/or hardstem bulrush (Scirpus acutus). Management will emphasize hardstem bulrush as the dominant emergent in the seasonal and permanent wetlands.

For purposes of maintaining a minimum roughness value for flood control purposes of Yolo Bypass, the emergent vegetation shall be kept to 5 percent or less of the total seasonal wetland area and 50 percent or less of the total permanent wetland area. A management program controlling the emergents shall be implemented utilizing water management, physical, chemical, and fire methods.

The following is an outline of a mechanical management method and time-table used to control emergents when the recommended percentage of surface areas of emergents are exceeded:

1. Draw-down pond in March through April, as seasonal flooding of the Yolo Bypass allows (draw-down to be completed by 15 May), to decrease spring "green-up". This will discourage nesting of birds and wildlife use.

2. Keep pond dry through June.

3. Begin control in late June or when pond bottom will support a tractor and heavy stubble disc. Open the disc only slightly and "rolldown" the areas of emergents that are to be removed. Create a mosaic pattern by leaving scattered patches of varying sizes. A second pass may be required to sufficiently knockdown the standing cover.

4. Allow treated vegetation to dry for 7-10 days.

5. Prepare for burning of vegetation:

   a) establish a safe perimeter (fireline).
   b) obtain permission to burn from the Yolo County Agriculture Office and local fire department.
   c) burn area by igniting "rolled-down" section only.

6. After burn is completed, use the tractor and disc, fully opened, to turn up the root zone

(roots and rhizomes) in all treated areas.

7. Allow as much time as possible (at least two months) to dry exposed plant parts before flood-up.

8. Redisc in August, if feasible.

Other methods of controlling heavy emergent cover include hot burning, use of chemicals, and water manipulation.

1.2. Management of Riparian Areas: The two riparian areas, Northwest and Causeway Unit will require a minimal maintenance program. The Causeway Unit will be irrigated and maintained for 2 more years (1998-1999).

1.3. Management of Grassland Areas: Grassland area management shall be determined by the Refuge Manager. Agricultural crops may be grown to provide food and cover for wildlife. Existing stands have been identified and a short term (1-2 years) weed control program for these stands would greatly increase the long term survivability of these stands. Long term management of weeds with use of grazing or fire programs are encouraged.

2. Exotic Weed Control Program: The project area has seen a steady exponential increase of several aggressive and dominating weed species that will affect the habitat values, management, and, most importantly, hydraulic Manning values of the refuge Perennial pepperweed (Lepidium latifolium L.) will require a committed control program within the seasonal, grassland, and water conveyance areas of the project. A control program utilizing chemical, physical, fire, and water management regimes needs to be developed and implemented for each of the project habitat.

2.1. Permanent: Areas shall be regularly monitored and open water maintained to hydraulic requirements.

2.2. Seasonals: The target vegetation of Swamp Timothy (Crypsis schoenoides) is competing with Helianthus annuus for habitat and affecting Manning's values. Exotic weeds shall be controlled with water management to minimize competition with Swamp Timothy and changing Manning's values.

2.3. Grasslands: Surviving native grass (Hordeum brachyantherum) stands have been identified (See Grassland Area Maps) with a total estimated acreage of at least 75 acres. A weed control program for these specific areas would greatly increase the survivability of these grass stands that have been heavily impacted by the 1996-1998 flood seasons. Mowings and fire can effectively be used as control methods.

2.4. Riparian Woodland: Control infestation of perennial pepperweed.

3. Vegetation Maintenance

3.1. Revegetation Maintenance Program: Develop a written maintenance program for each habitat type including but not limited to the following:

3.1.3. Inspection Program: A regular inspection program for waterways and culverts.

3.1.2. Predation: Beaver colonization and predation to riparian plantings shall be inspected regularly and controlled. Recommend that beaver cages located in Northwest riparian area be kept in place.

3.1.3. Weed Control: (See 2.0)

3.2. Causeway Unit (25 acres): The refuge manager is responsible for the maintenance and irrigation of the riparian plantings (installed Fall 1998) for a period of 2 years (1998 - 1999).

3.2.1. Regular Maintenance (bi-weekly)
Pruning for plant structure only (as needed)
Weeded zone around each plant (36 inch diameter)

3.2.2. Irrigation
Irrigation Schedule (See Causeway Unit)
System Maintenance (Every watering period)

4. References for Project Revegetation Work: *Copies of referenced proposals and reports have been provided to the Department of Fish and Game, Yolo Wildlife Area.*

4.1. Technical Proposal for Restoration Planting and Maintenance, Northern Sector. Putah Creek Sinks Unit: Yolo Basin Wetlands, California, DACW05-95-C-0009, 12 October 1994.

4.2. First Year Monitoring Report for Restoration Planting and Maintenance, Yolo Basin Wetlands, Northern Sector, Putah Creek Sinks Unit, DACW05-95-0009, 31 October 1996.

4.3. Final Monitoring Report for Restoration Planting and Maintenance, Yolo Basin Wetlands, Northern Sector, Putah Creek Sinks Unit, DACW05-95-0009, February 1998

4.4. Grassland Inventory and Soils Analysis Report, Yolo Basin Wetlands Putah Creek Sinks, DACW05-99-P-0167, 23 March 1999

XI. Revegetation Plans and Maps

Project Revegetation Map (draft)

North West Unit: Riparian Area
- Planting Plan
- Irrigation Plan

Causeway Unit: Riparian Area
- Title Sheet & Location Map
- Revegetation Plan (West)
- Revegetation Plan (East)
- Details
- Irrigation Schedule

Grassland Areas
- Northwest Unit: Field NW-1
- Northwest Unit: Field NW-2
- Northwest Unit: Field NW-3
- Central Unit: Field C-1
- Central Unit: Field C-2
- Central Unit: Field C-3
- Central Unit: Field C-4 (North ½)
- Central Unit: Field C-4 (South ½)
- Northeast Unit: Field NE-2
- Northeast Unit: Field NE-3
- South Unit: (Deleted: Managed as Seasonal Area)

Project Revegetation Map

No Scale

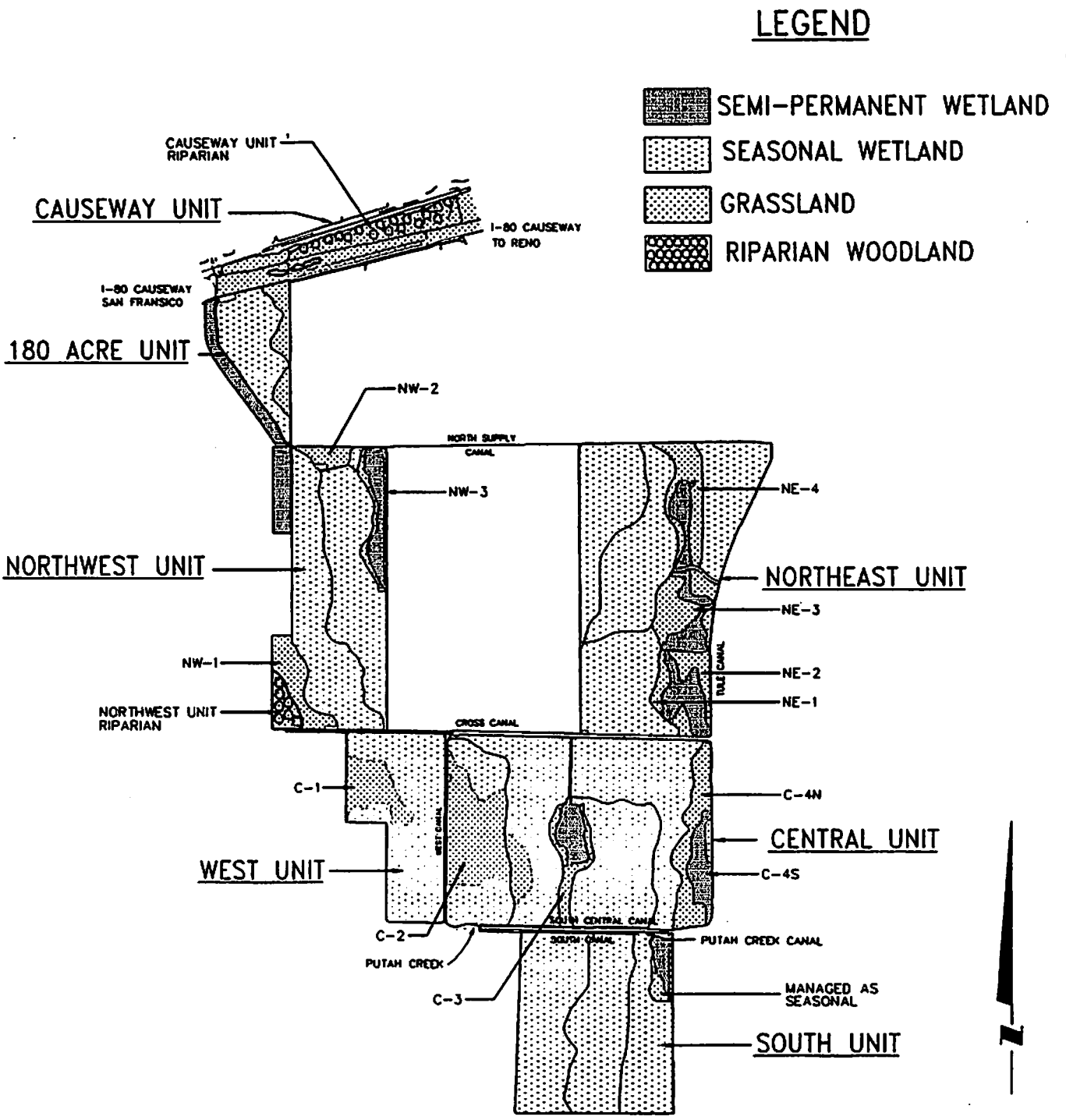

NOTE:
NW-1 : DESIGNATES GRASSLAND AREA LOCATIONS

VIC VAZIO YOLO WILDLIFE AREA
VEGETATION MAP

NOT TO SCALE

Exhibit J
Sheet 6 of 28

North West Unit

Riparian Area

Planting Plan
Irrigation Plan

Note: Full size drawings have been previously provided to the Department of Fish and Game, Yolo Wildlife Area

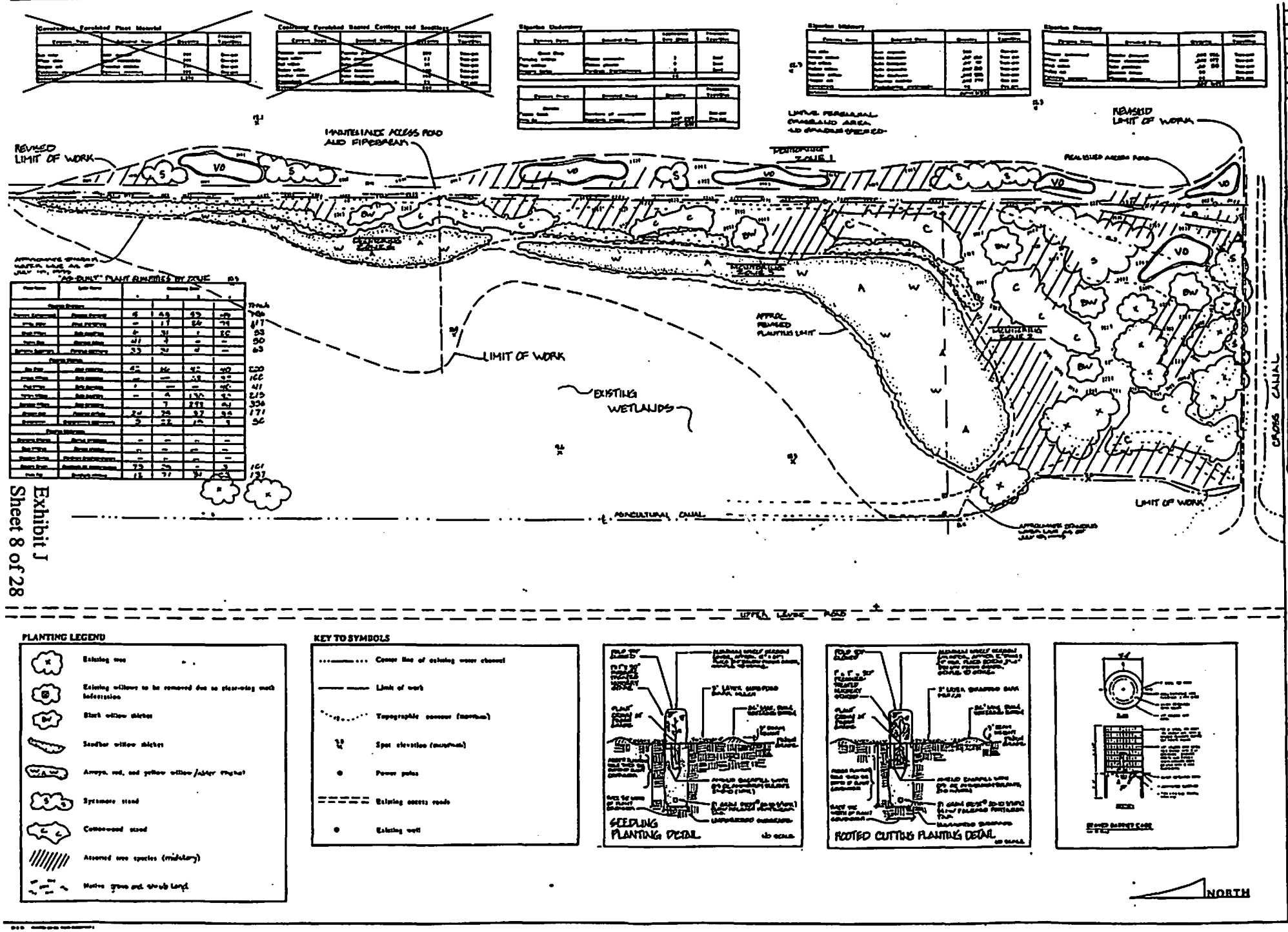

Exhibit J
Sheet 8 of 28

DEPARTMENT OF THE ARMY
SACRAMENTO DISTRICT
CORPS OF ENGINEERS
SACRAMENTO, CA

YOLO BASIN WETLANDS
NORTHERN SECTOR
PUTAH CREEK SINKS UNIT
RIPARIAN HABITAT

SIERRA VIEW LANDSCAPE

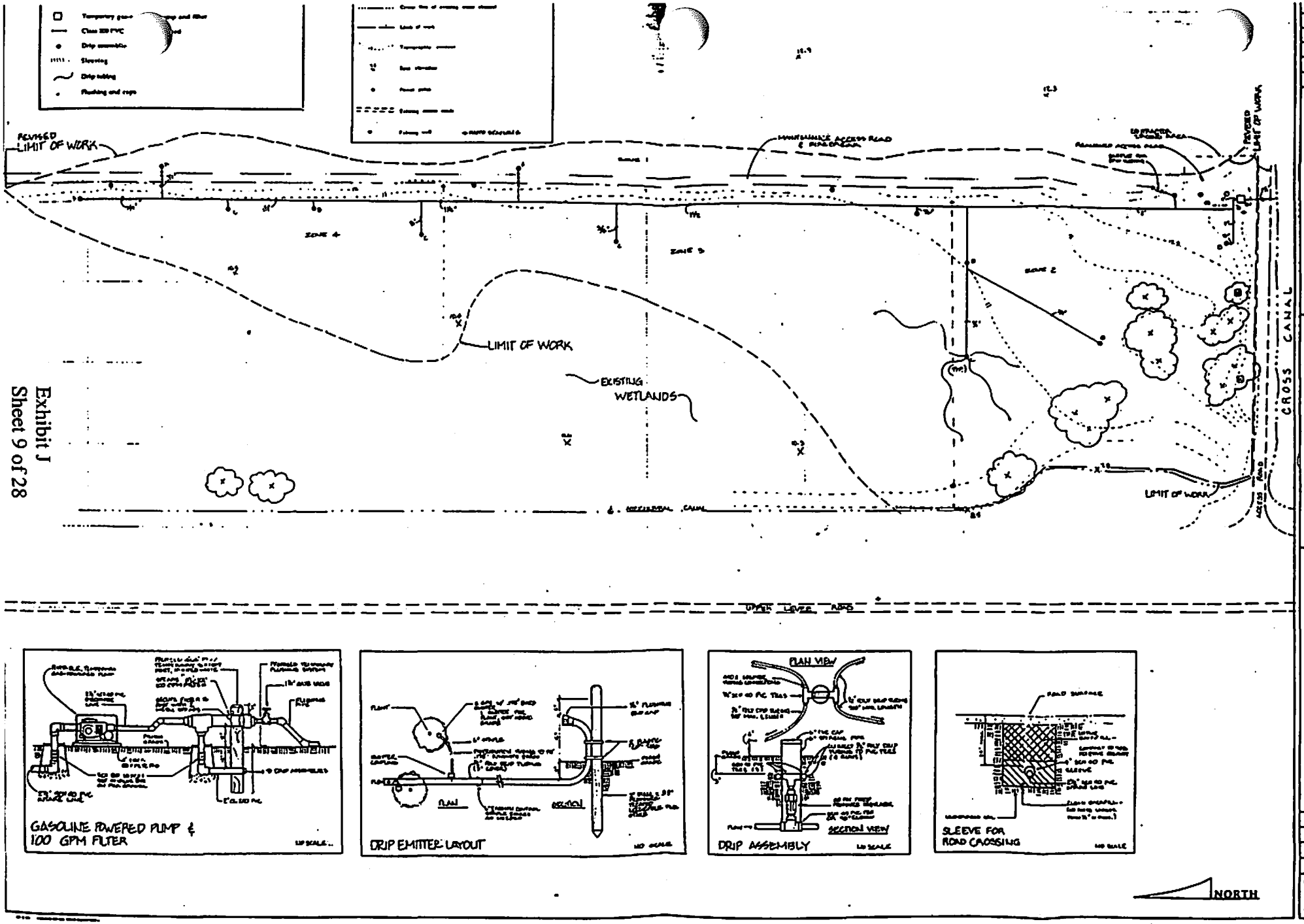

Exhibit J
Sheet 9 of 28

DEPARTMENT OF THE ARMY
SACRAMENTO DISTRICT
CORPS OF ENGINEERS

YOLO BASIN WETLANDS
NORTHERN SECTOR
PUTAH CREEK SINKS UNIT
RIPARIAN HABITAT

SIERRA VIEW LANDSCAPE

LSC

1

Causeway Unit

Riparian Area

Title Sheet & Location Map
Revegetation Plan (West)
Revegetation Plan (East)
Details
Irrigation Schedule

Note: Full size drawings have been previously provided to the Department of Fish and Game, Yolo Wildlife Area

YOLO COUNTY, CALIFORNIA

YOLO BASIN WETLANDS

CAUSEWAY UNIT

HABITAT REVEGETATION

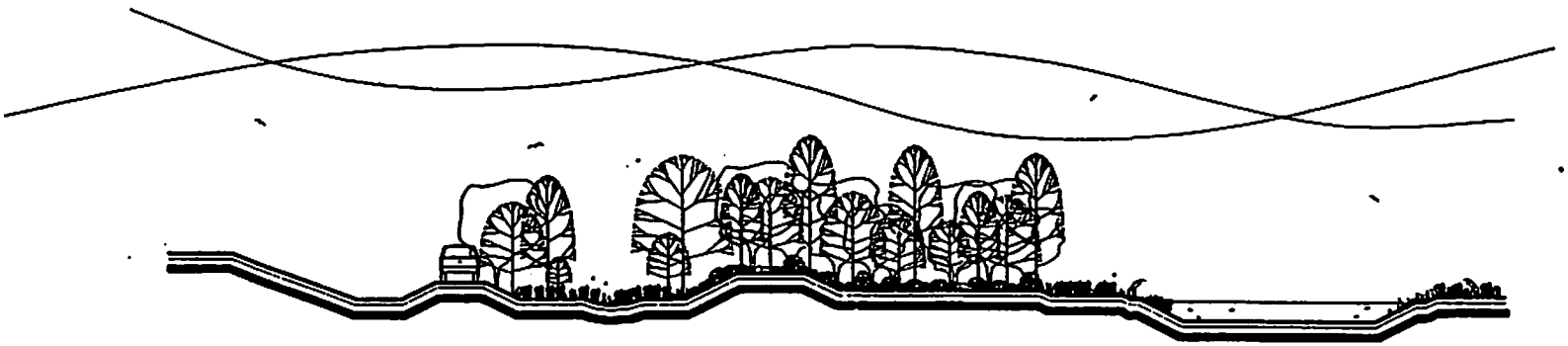

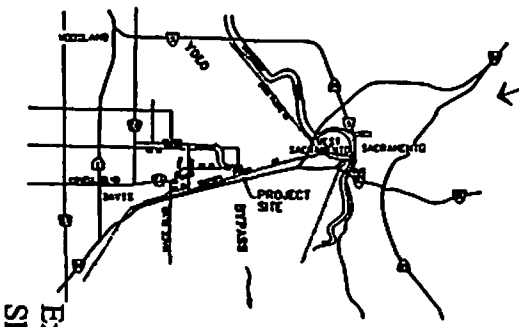

AREA MAP
NOT TO SCALE

VICINITY MAP
NOT TO SCALE

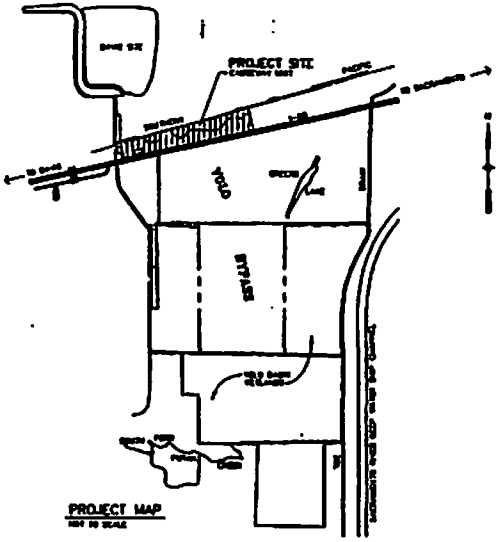

PROJECT MAP
NOT TO SCALE

SCHEDULE OF DRAWINGS

SHEET NO.	SHEET TITLE
L-1	TITLE SHEET & LOCATION MAP
L-2	REVEGETATION PLAN (WEST)
L-3	REVEGETATION PLAN (EAST)
L-4	DETAILS

NOTE: PLANTING ZONES, LOCATIONS, AND CONFIGURATIONS WILL CHANGE AS PER FIELD CONDITIONS AND IRRIGATION LAYOUT CONSTRUCTION.

FINAL/AS-Built Records

U.S. Army Corps of Engineers
Sacramento District

DEPARTMENT OF THE ARMY
CORPS OF ENGINEERS
SACRAMENTO, CALIFORNIA

YOLO COUNTY
YOLO BASIN WETLANDS
CAUSEWAY UNIT
REVEGETATION PLAN
TITLE SHEET & LOCATION MAP

Sheet reference number
L-1

Exhibit J
Sheet 11 of 28

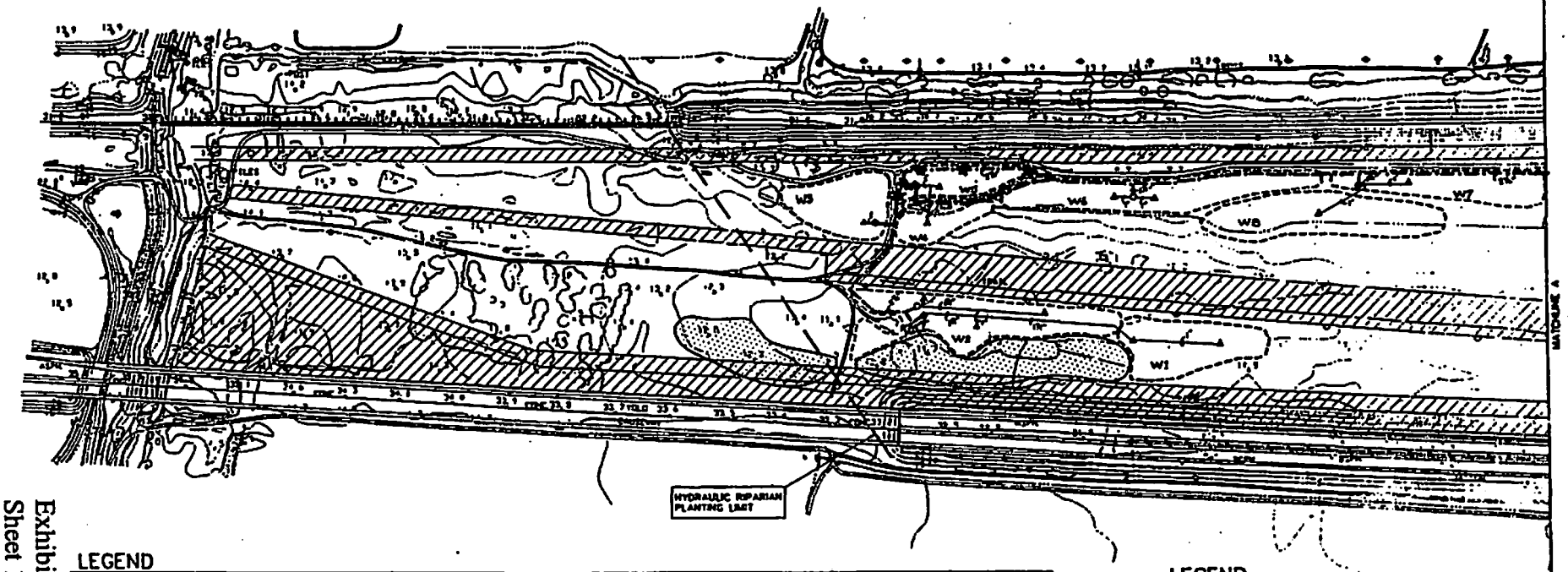

LEGEND

TREES			QUANTITIES PER LANDSCAPE ZONES													
BOTANICAL NAME	COMMON NAME	SIZE	W1	W2	W3	W4	W5	W6	W7	W8	E1	E2	E3	E4	E5	TOTAL
ACER NEGUNDO CALIFORNICUM	BOX ELDER	D-POT	25	100	50	20	20	30	80	30	0	0	25	25	25	430
ALNUS RHOMBIFOLIA	WHITE ALDER	D-POT	50	60	80	10	20	75	35	35	25	30	30	75	25	505
FRAXINUS LATIFOLIA	OREGON ASH	D-POT	20	20	20	10	10	20	10	10	80	0	0	0	10	160
PLATANUS RACEMOSA	CALIFORNIA SYCAMORE	TREE POT	20	20	0	0	0	0	0	0	0	0	0	0	0	40
POPULUS FREMONTII FREMONTII	FREMONT COTTONWOOD	D-POT	125	145	80	35	30	130	60	60	130	100	60	190	70	1128
SALIX LAEVIGATA	RED WILLOW	D-POT	50	80	20	15	30	60	25	25	60	25	50	25	60	515
SALIX LASIANDRA	YELLOW WILLOW	D-POT	50	55	20	15	60	75	35	35	60	35	50	70	70	615
QUERCUS LOBATA	VALLEY OAK	TREE POT	100	140	100	40	40	100	30	30	60	60	60	110	45	883
SHRUBS/VINES																
BACCHARIS VIMINEA	MULE-FAT	D-POT	20	20	20	10	20	0	0	0	0	0	0	0	0	80
BACCHARIS PILULARIS	COYOTE BUSH	D-POT	20	60	80	10	20	0	0	0	0	0	0	0	0	100
CEPHALANTHUS OCCIDENTALIS	BUTTON BUSH	D-POT	20	25	20	0	15	25	25	25	60	30	25	30	20	300
CLEMATIS LIGUSTICIFOLIA	CLEMATIS	D-POT	10	15	5	0	5	0	0	0	0	5	5	5	0	50
ROSA CALIFORNICA	CALIFORNIA WILD ROSE	D-POT	60	60	20	15	20	30	60	30	60	40	25	20	25	380
SALIX GOODDINGI	GOODDINGS WILLOW	D-POT	20	30	30	10	15	20	20	20	60	60	60	60	70	430
VITIS CALIFORNICA	CALIFORNIA WILD GRAPE	D-POT	10	10	10	0	0	10	0	0	10	10	0	0	0	60
	PLANT TOTALS:		662	830	430	178	360	600	300	300	495	495	380	600	460	5,000
		ACRES	2.2	3.1	1.7	0.7	1.1	2.7	2.0	1.7	1.5	1.4	1.1	3.0	2.0	25.0

LEGEND

- EXISTING TREES
- ESTIMATED EASEMENT LOCATION
- EXISTING PERMANENT POND
- W3 LANDSCAPE ZONE

NOTE: EASEMENT LOCATIONS AND LIMITS ARE ESTIMATED AND SHALL BE VERIFIED BEFORE ANY CONSTRUCTION.

NOTE: PLANTING ZONE LOCATIONS AND CONFIGURATIONS WILL CHANGE AS PER FIELD CONDITIONS AND IRRIGATION LAYOUT CONSTRUCTION.

IRRIGATION LEGEND ON SHEET L-4

0 200 400 800

SCALE IN FEET

US Army Corps of Engineers Sacramento District

DEPARTMENT OF THE ARMY SACRAMENTO DISTRICT, CORPS OF ENGINEERS
SACRAMENTO DISTRICT
1325 J STREET
SACRAMENTO, CA 95814-2922

YOLO COUNTY CALIFORNIA
YOLO BASIN WETLANDS
CHANNEL UNIT
REVEGETATION PLAN (WEST)

Sheet reference number: L-2
Sheet of

FINAL - 25 JULY 93

Exhibit J
Sheet 12 of 28

Irrigation Schedule

Landscape Zone	Area (sq)	No. of Plants	Plants/ Zone	Water Demand (gpm)	Ball Valve Size	No. Drip Assemb. Size	Water Drop	Valve Marker Color	Water Run Time
W1	2.2	457	201	22.1	1.5"	2	blue	Red	8 hours
W2	2.1	520	200	22.7	1.5"	2	Vinyl	White	8 hours
W3	1.9	520	215	14.7	1.5"	2	blue	Red	8 hours
W4	0.7	175	215	8.99	1.5"	1	PE	Blue	8 hours
W5	1.1	215	217	8.9	Indicated valve	1	Indicated valve		8 hours
W6	2.7	500	225	20.2	1.5"	1	Vinyl	White	8 hours
W7	2.5	205	115	10.2	1.5"	1	PE	Blue	8 hours
W8	1.7	200	175	10	Indicated valve	1	Indicated valve		8 hours
E9	2.0	415	215	15.7	1.5"	2	blue	Red	8 hours
E4	2.7	555	202	20.3	1.5"	2	PE	Blue	8 hours
E3	1.1	200	215	15.7	1.5"	1	PE	Blue	8 hours
E2	1.6	425	225	10.4	1.5"	2	Vinyl	White	8 hours
E1	1.5	447	217	10.0	1.5"	2	blue	Red	8 hours
			average				3 days/ week		10 hour work
Total	23.0	3957	210.0	199.7	11 valves	22			

Legend

- Point of connection
- Mainline, size as indicated 24" cover, class 200 pvc
- Lateral line, size as indicated 12" cover, class 200 pvc
- Ball check valve, 1-1/2" in plastic box and marked with 4"x4" PTW post painted white with colored band
- Drip assembly marked with a 2" lodgepole pine stake painted white
- Pressure relief valve

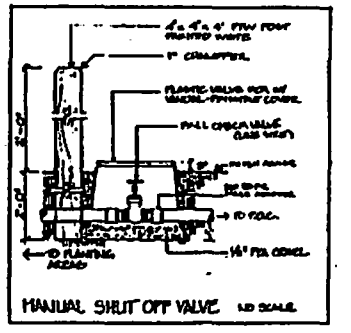

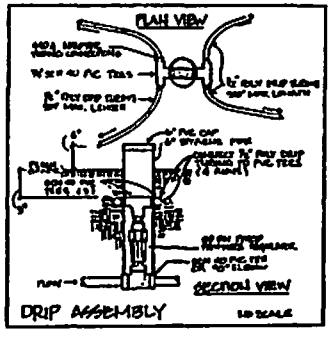

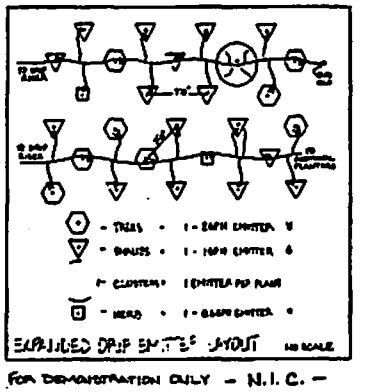

FOR DEMONSTRATION ONLY – N.I.C. –

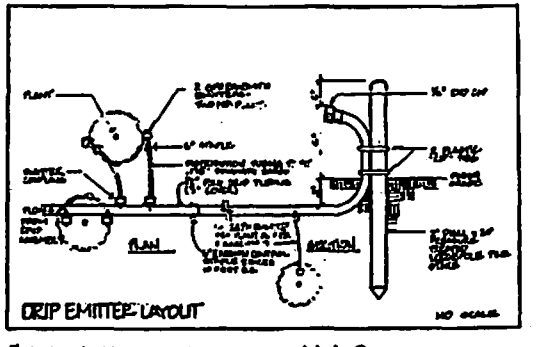

FOR DEMONSTRATION ONLY – N.I.C. –

SIERRA VIEW LANDSCAPE, INC.

Yolo Basin Wetlands Causeway Unit

Sheet Title: Details

L.4

Exhibit J
Sheet 13 of 28

Irrigation Schedule

Land-scape Zone	Area (ac)	No. of Plants	Plants/ Acre	Water Demand (gpm)	Ball Valve Size	No. Drip Assem-blies	Water Days	Valve Marker Color	Water Run Time
W1	2.2	662	301	22.1	1.5"	2	Mon	Red	6 hours
W2	3.1	830	268	27.7	1.5"	3	Wed	White	6 hours
W3	1.7	430	253	14.3	1.5"	2	Mon	Red	6 hours
W4	0.7	178	254	5.96	1.5"	1	Fri	Blue	6 hours
W5	1.1	255	232	8.5	included w/W4	1	included w/W4		6 hours
W6	2.7	608	225	20.3	1.5"	2	Wed	White	6 hours
W7	2.8	308	110	10.3	1.5"	1	Fri	Blue	6 hours
W8	1.7	300	176	10	included w/W7	1	included w/W7		6 hours
E5	2.0	458	229	15.3	1.5"	2	Mon	Red	6 hours
E4	3.0	608	203	20.3	1.5"	2	Fri	Blue	6 hours
E3	1.1	380	345	12.7	1.5"	1	Fri	Blue	6 hours
E2	1.4	493	352	16.4	1.5"	2	Wed	White	6 hours
E1	1.5	445	297	14.8	1.5"	2	Mon	Red	6 hours
Total	25.0	5955	average 249.6	198.7	11 valves	22	3 days/ week		18 hrs/ week

Grassland Areas Maps

(From: Grasslands Inventory and Soils Analysis Report)

23 March 1999

Northwest Unit: Field NW-1
Northwest Unit: Field NW-2
Northwest Unit: Field NW-3
Central Unit: Field C-1
Central Unit: Field C-2
Central Unit: Field C-3
Central Unit: Field C-4 (North ½)
Central Unit: Field C-4 (South ½)
Northeast Unit: Field NE-2
Northeast Unit: Field NE-3
South Unit: Not Included (Deleted: Seasonal Area)

Field Reference Map

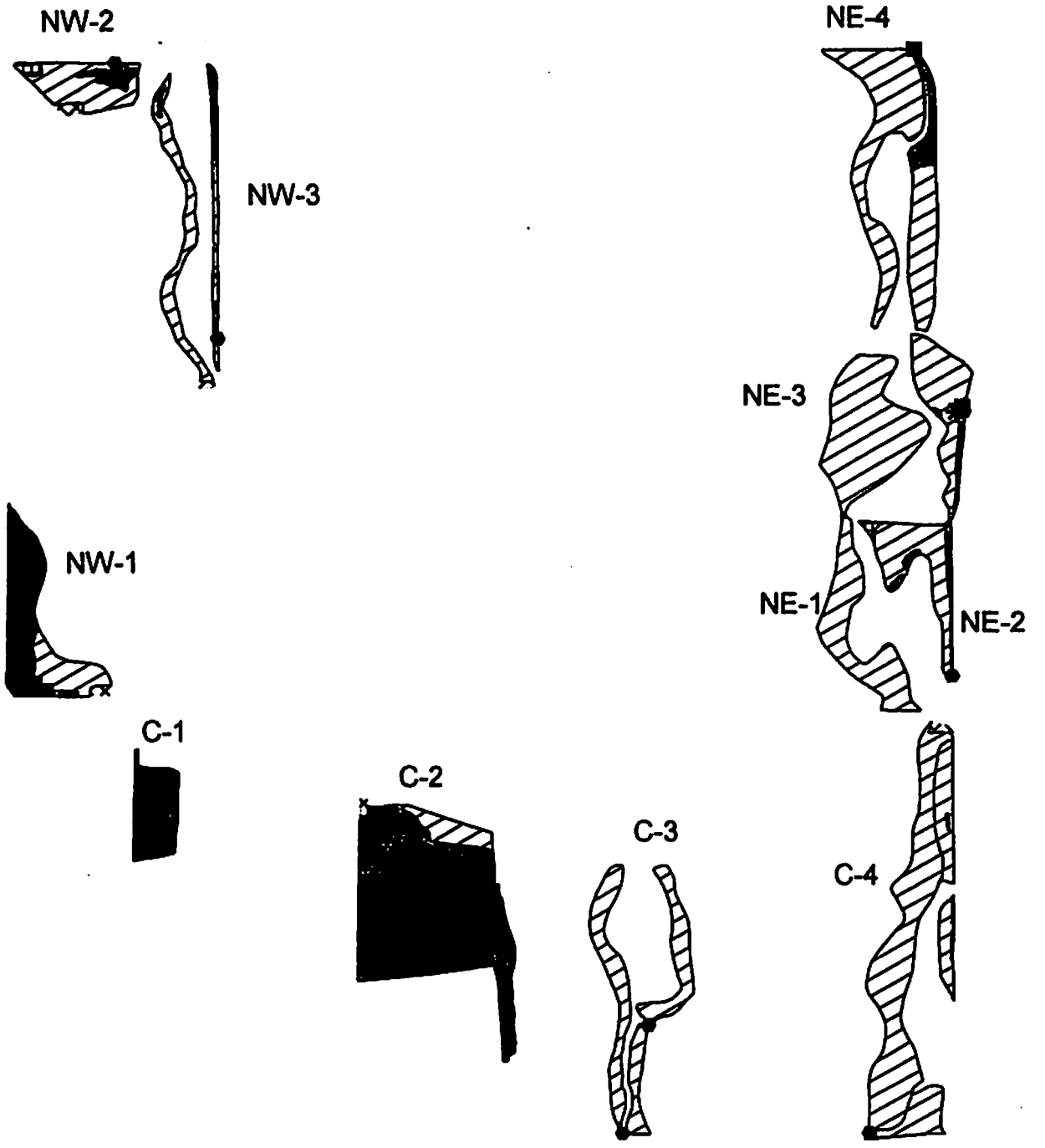

2000 0 2000 Feet

Created February 1999
Revised April 1999
tt/yolodavis

Exhibit J
Sheet 16 of 28

Yolo Basin Wetlands
Putah Sinks Site Map

Northeast Unit
Field NE-1

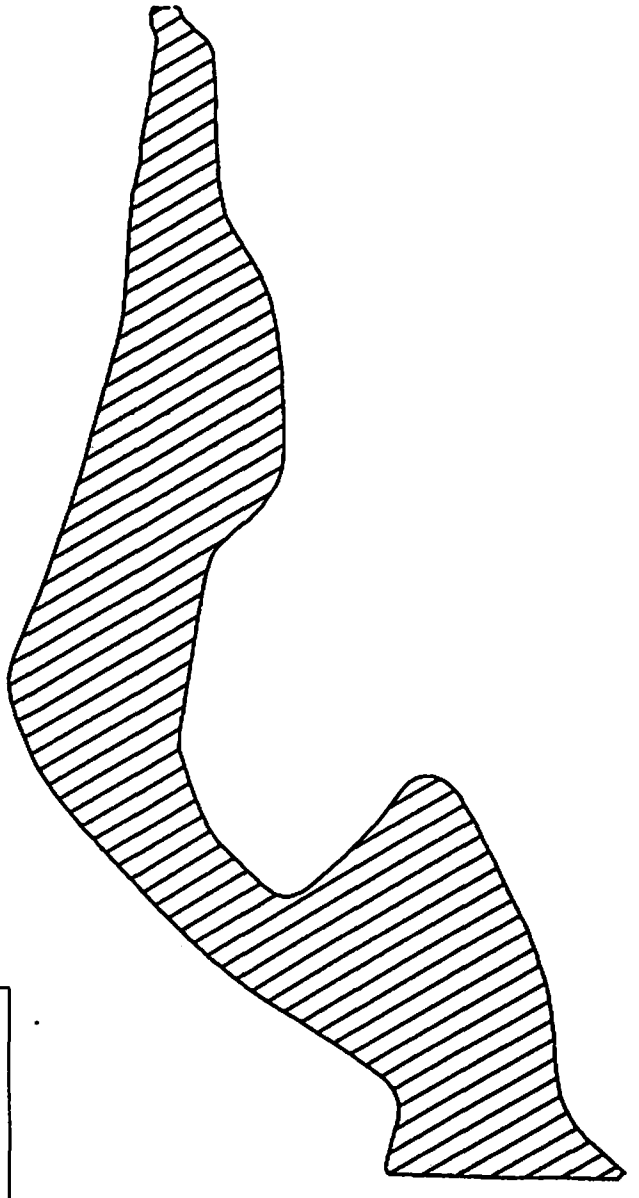

Points of Interest
- Culvert
- Waterman Valve
- Tree
- Water Control Drop Box

Mapped Areas
- Mixed Herbaceous
- Established Meadow Barley Area
- Disturbed Area
- Parking Lot

0 400 800 Feet

N W E S

Created February 1999
Revised April 1999

Yolo Basin Wetlands
Putah Sinks Site Map

Exhibit J
Sheet 17 of 28

Northeast Unit
Field NE-2

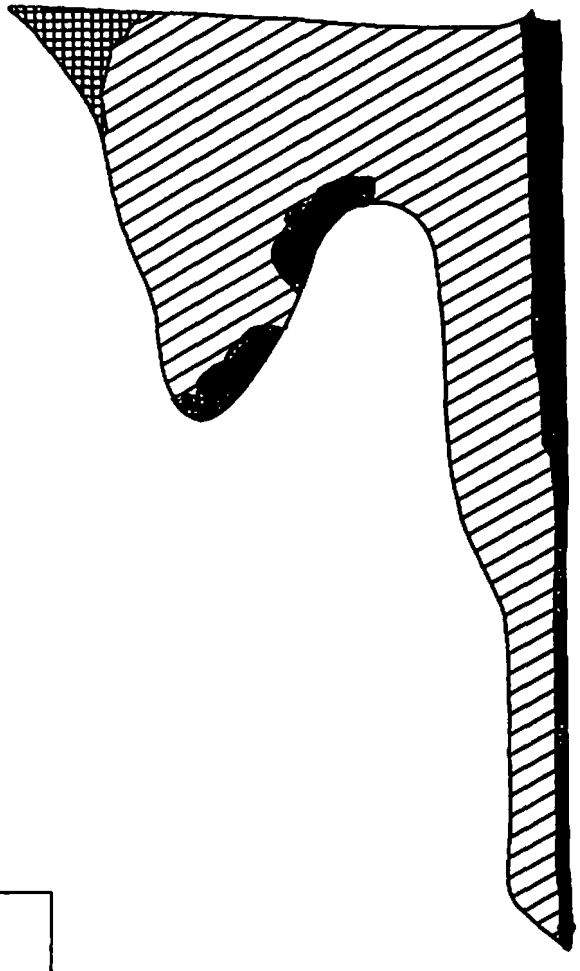

Points of Interest
- Culvert
- Waterman Valve
- Tree
- Water Control Drop Box

Mapped Areas
- Mixed Herbaceous
- Established Meadow Barley Area
- Disturbed Area
- Parking Lot

400 0 400 800 Feet

N W E S

Yolo Basin Wetlands
Putah Sinks Site Map
Exhibit J
Sheet 18 of 28

Created February 1999
Revised April 1999

Northeast Unit
Field NE-3

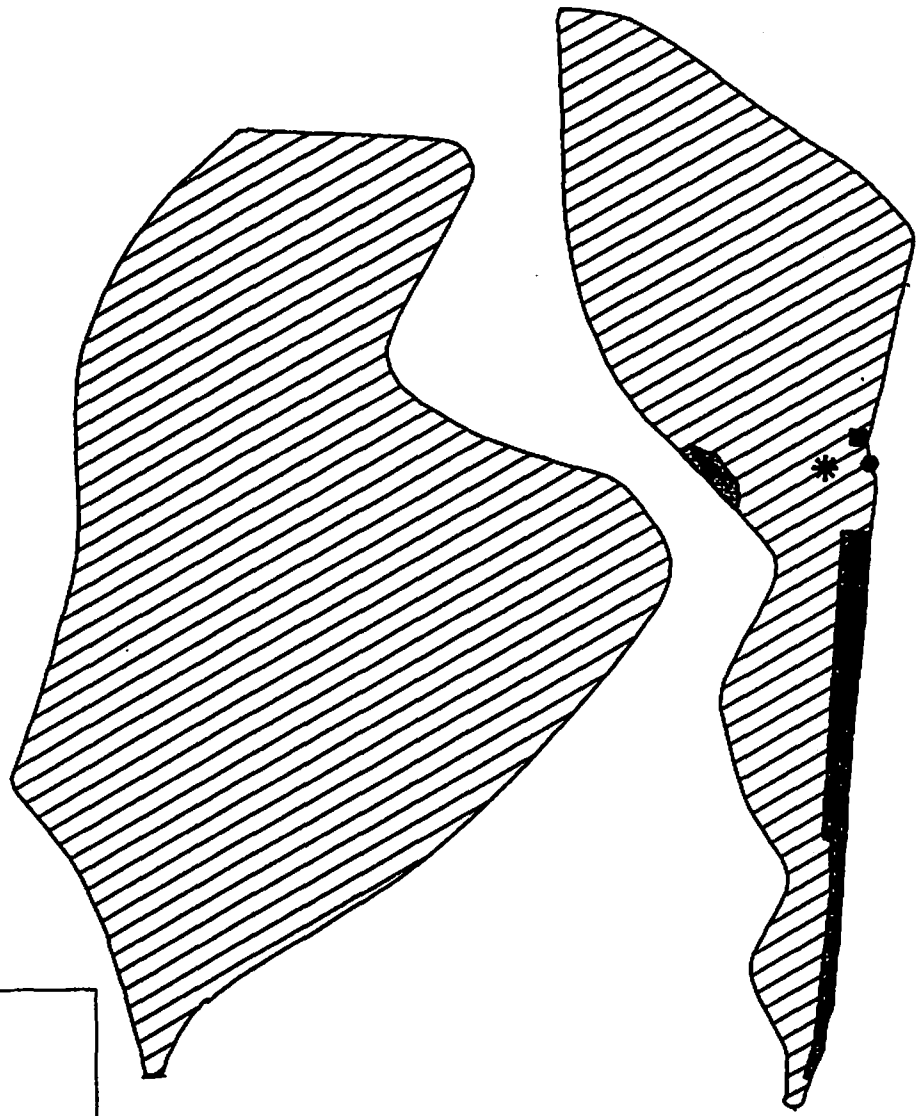

Points of Interest
- Culvert
- Waterman Valve
- Tree
- Water Control Drop Box

Mapped Areas
- Mixed Herbaceous
- Established Meadow Barley Area
- Disturbed Area
- Parking Lot

)0 0 400 800 Feet

Created February 1999
Revised April 1999

N
W E
S

Yolo Basin Wetlands
Putah Sinks Site Map

Exhibit J
Sheet 19 of 28

Northeast Unit
Field NE-4

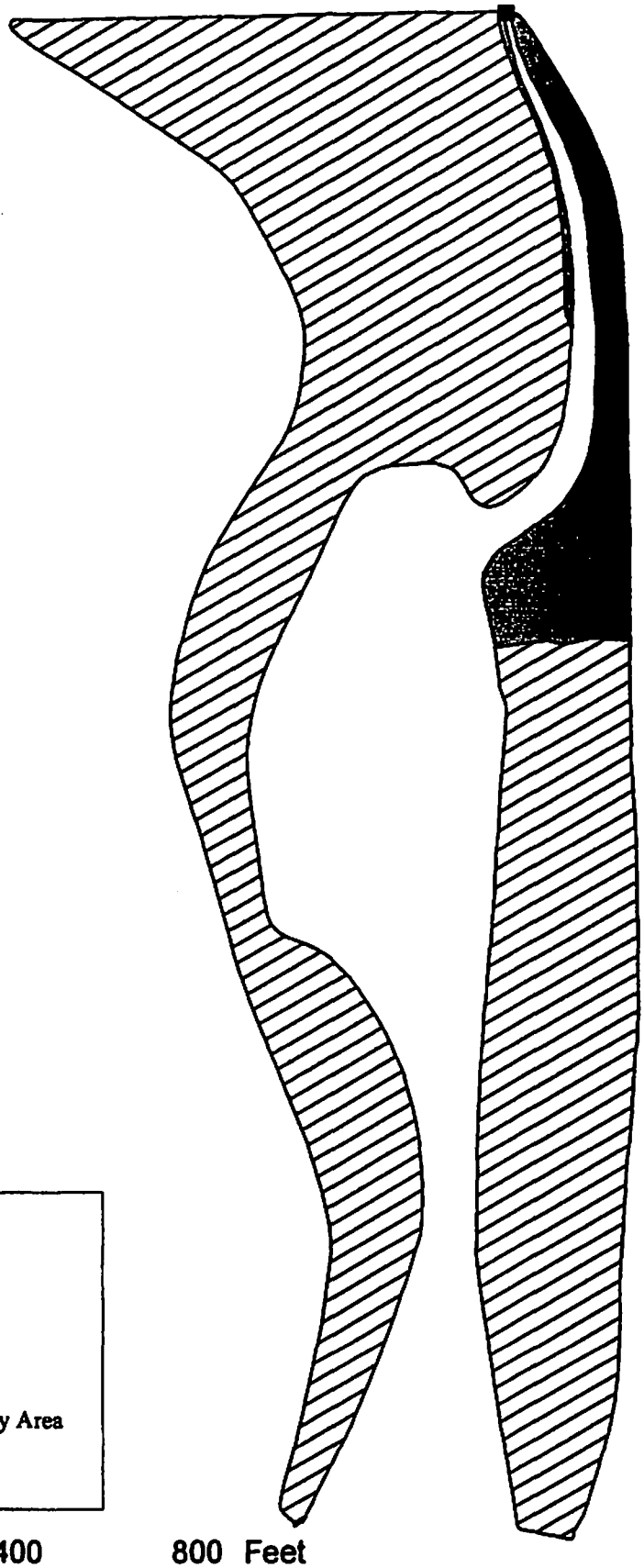

Points of Interest
- Culvert
- Waterman Valve
- Tree
- Water Control Drop Box

Mapped Areas
- Mixed Herbaceous
- Established Meadow Barley Area
- Disturbed Area
- Parking Lot

400 0 400 800 Feet

N W E S

Created February 1999
Revised April 1999
Exhibit J
Sheet 20 of 28

Yolo Basin Wetlands
Putah Sinks Site Map

Northwest Unit
Field NW-1

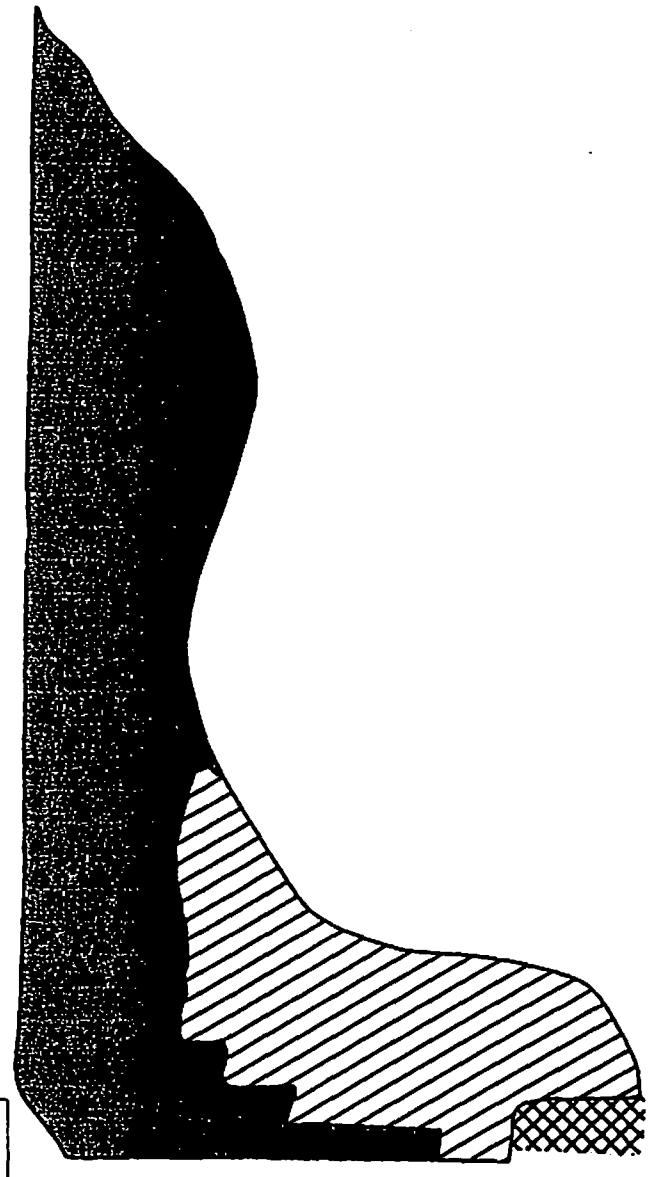

Points of Interest
- Culvert
- Waterman Valve
- Tree
- Water Control Drop Box

Mapped Areas
- Mixed Herbaceous
- Established Meadow Barley Area
- Disturbed Area
- Parking Lot

0 400 800 Feet

N W E S

Created February 1999
Revised April 1999

Yolo Basin Wetlands
Putah Sinks Site Map
Exhibit J
Sheet 21 of 28

Northwest Unit
Field NW-2

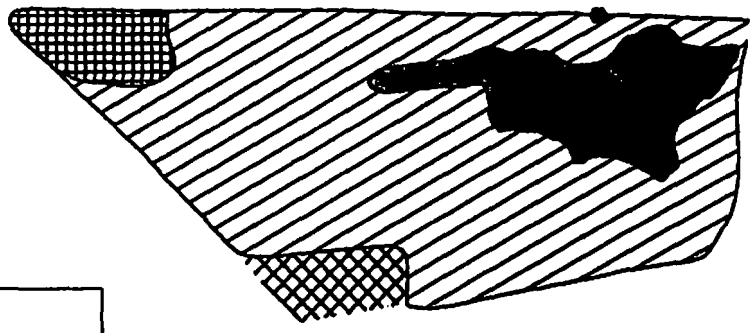

Points of Interest
- Culvert
- Waterman Valve
- Tree
- Water Control Drop Box

Mapped Areas
- Mixed Herbaceous
- Established Meadow Barley Area
- Disturbed Area
- Parking Lot

400 0 400 800 Feet

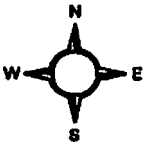

Created February 1999
Revised April 1999
Exhibit J
Sheet 22 of 28

Yolo Basin Wetlands
Putah Sinks Site Map

Northwest Unit
Field NW-3

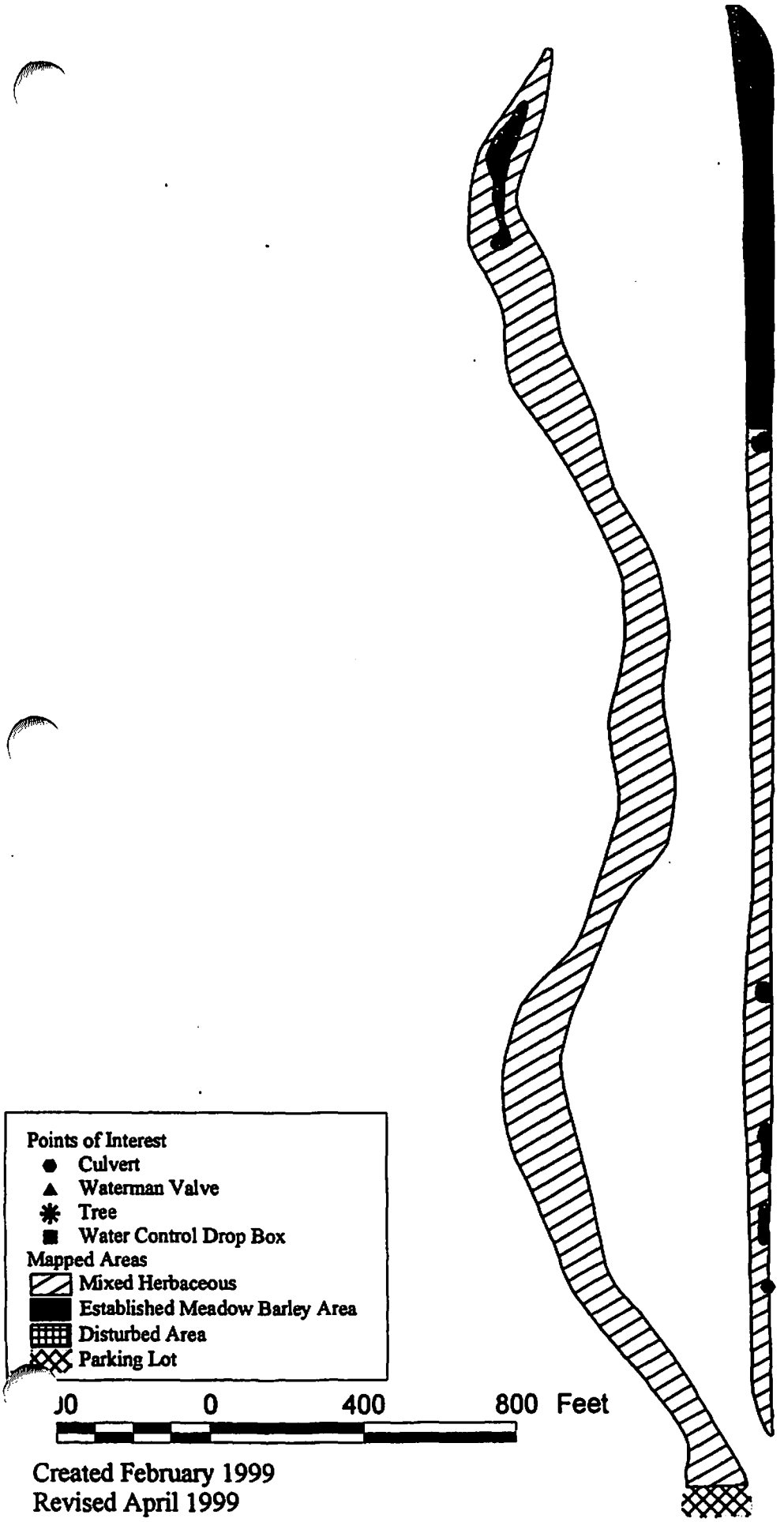

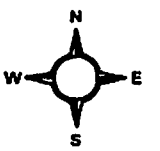

Created February 1999
Revised April 1999

Yolo Basin Wetlands
Putah Sinks Site Map

Exhibit J
Sheet 23 of 28

Central Unit
Field C-1

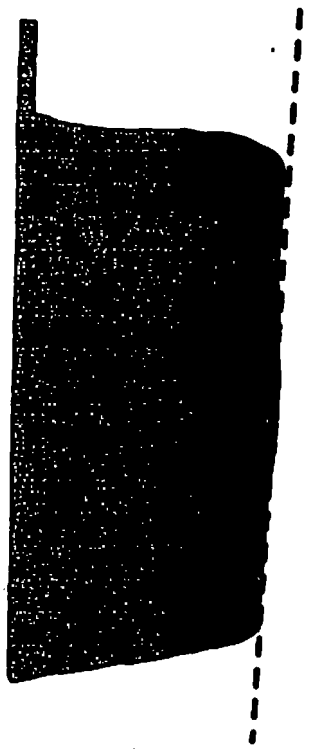

This area was not accessible during the time this information was collected

Points of Interest
- Culvert
- Waterman Valve
- Tree
- Water Control Drop Box

Mapped Areas
- Mixed Herbaceous
- Established Meadow Barley Area
- Disturbed Area
- Parking Lot

400 0 400 800 Feet

N W E S

Created February 1999
Revised April 1999
Exhibit J
Sheet 24 of 28

Yolo Basin Wetlands
Putah Sinks Site Map

Central Unit
Field C-2

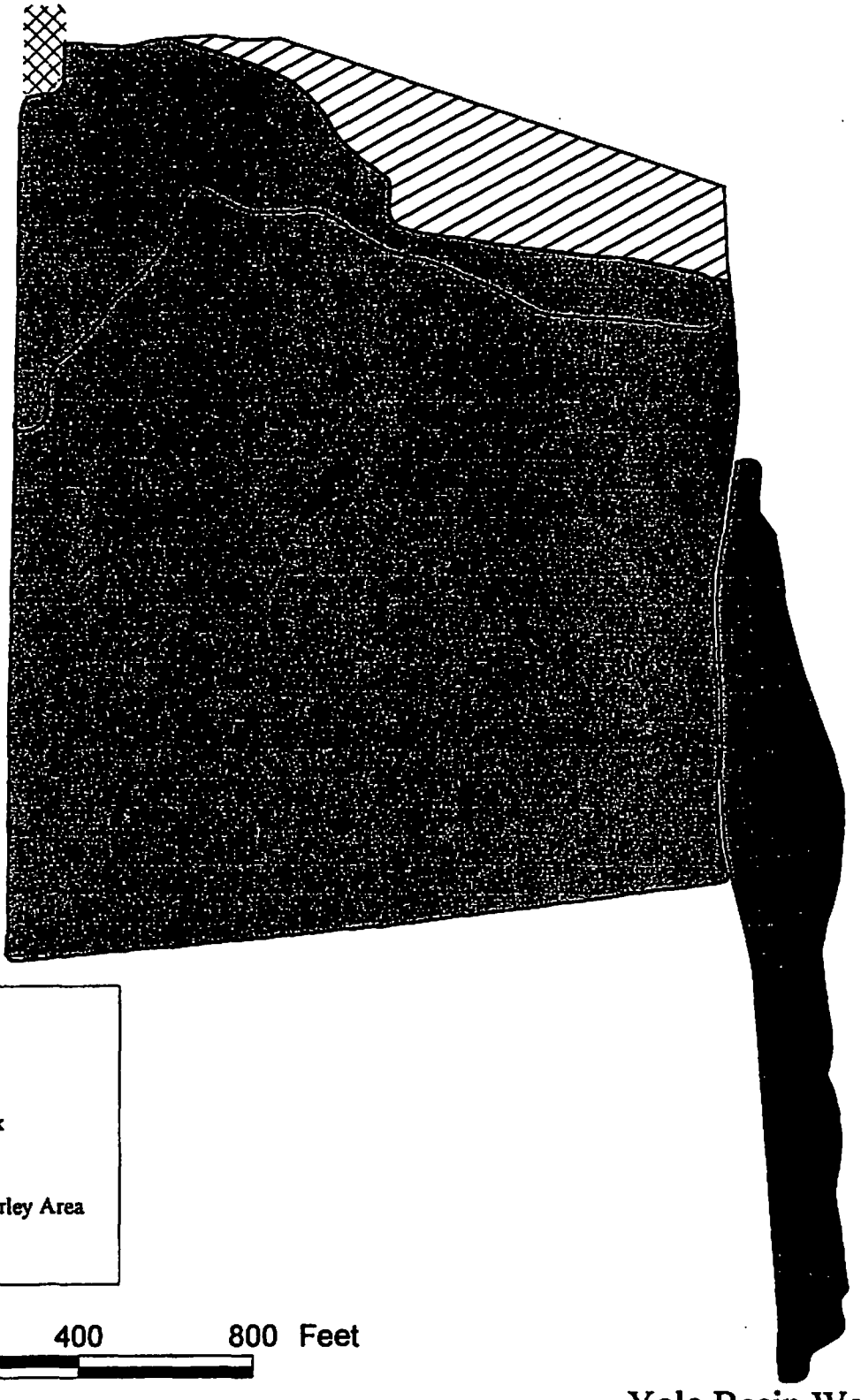

Points of Interest
- Culvert
- Waterman Valve
- Tree
- Water Control Drop Box

Mapped Areas
- Mixed Herbaceous
- Established Meadow Barley Area
- Disturbed Area
- Parking Lot

400 0 400 800 Feet

N W E S

Created February 1999
Revised April 1999

Yolo Basin Wetlands
Putah Sinks Site Map

Exhibit J
Sheet 25 of 28

Central Unit
Field C-3

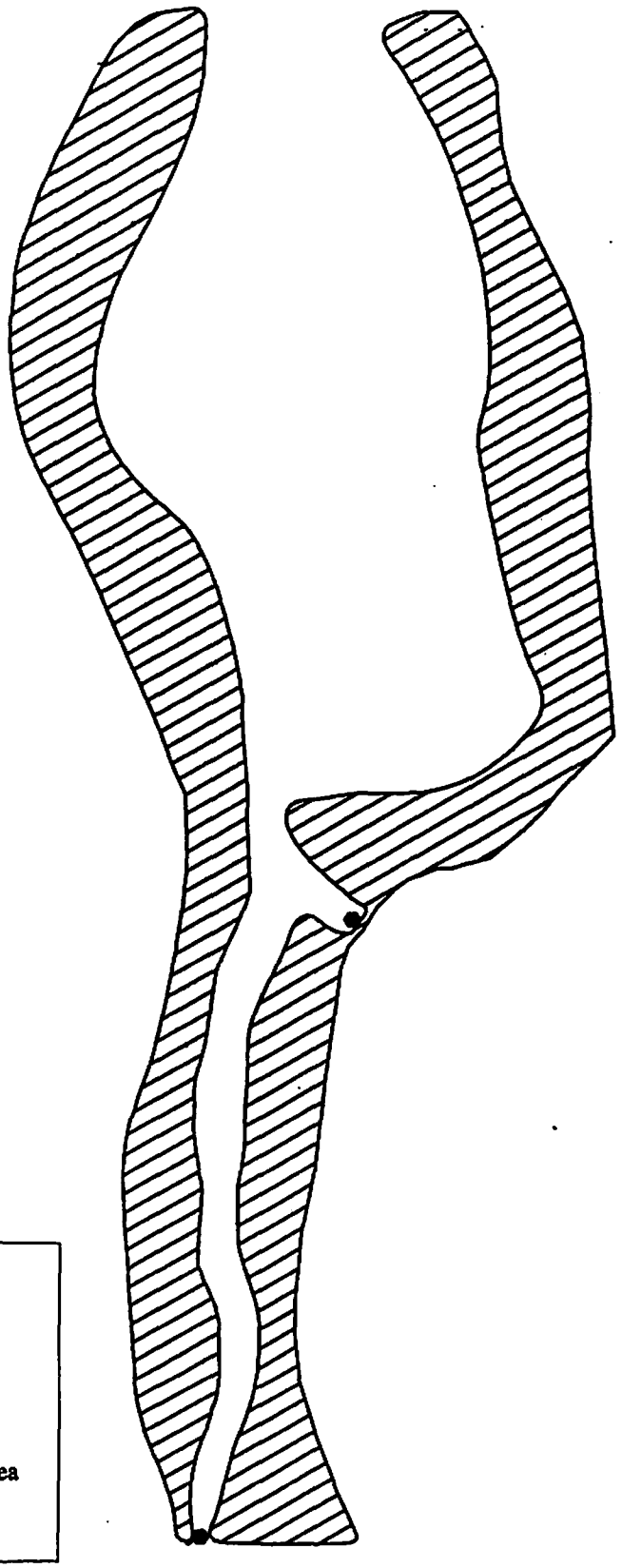

Points of Interest
- Culvert
- Waterman Valve
- Tree
- Water Control Drop Box

Mapped Areas
- Mixed Herbaceous
- Established Meadow Barley Area
- Disturbed Area
- Parking Lot

400 0 400 800 Feet

N W E S

Created February 1999
Revised April 1999
Exhibit J
Sheet 26 of 28

Yolo Basin Wetlands
Putah Sinks Site Map

Central Unit
Field C-4 (North 1/2)

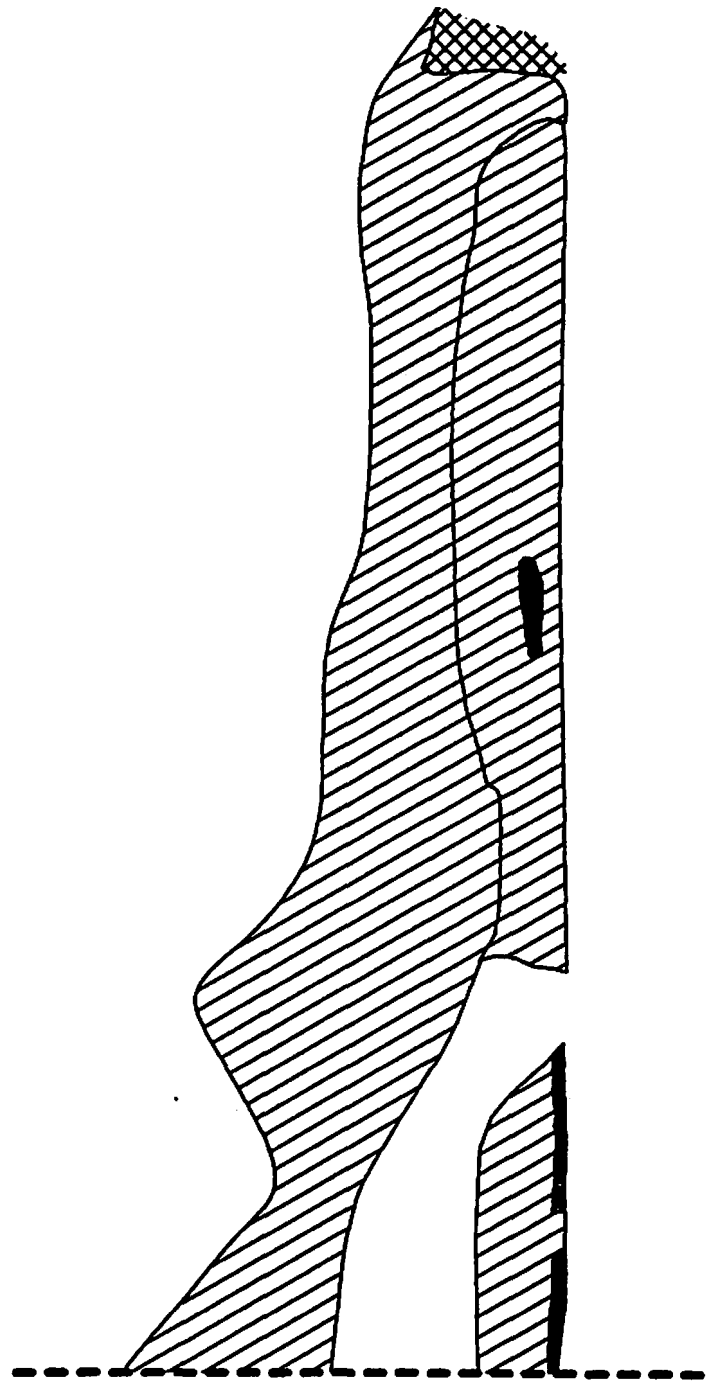

Points of Interest
- Culvert
- Waterman Valve
- Tree
- Water Control Drop Box

Mapped Areas
- Mixed Herbaceous
- Established Meadow Barley Area
- Disturbed Area
- Parking Lot

0 400 800 Feet

N W E S

Created February 1999
Revised April 1999

Yolo Basin Wetlands
Putah Sinks Site Map

Exhibit J
Sheet 27 of 28

Central Unit
Field C-4 (South 1/2)

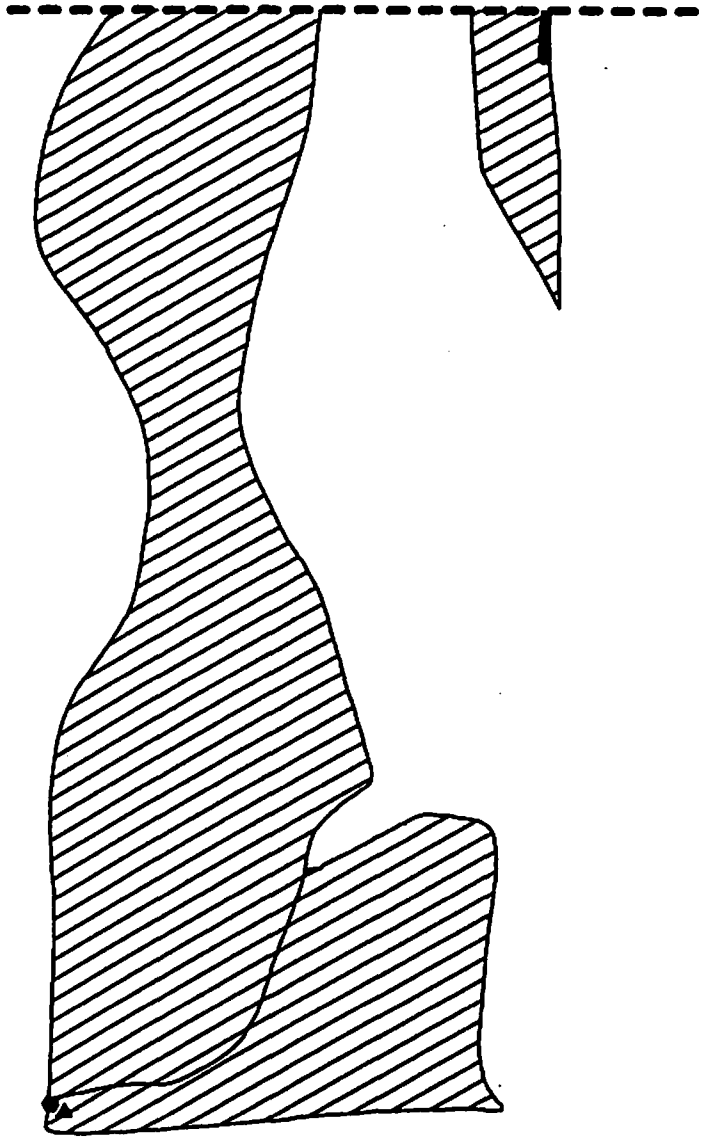

Points of Interest
- Culvert
- Waterman Valve
- Tree
- Water Control Drop Box

Mapped Areas
- Mixed Herbaceous
- Established Meadow Barley Area
- Disturbed Area
- Parking Lot

400 0 400 800 Feet

N W E S

Created February 1999
Revised April 1999

Yolo Basin Wetlands
Putah Sinks Site Map
Exhibit J
Sheet 28 of 28